REV.	DATE	ECR NO.	DESCRIPTION
NC	05/18/99	XXXXXX	INITIAL RELEASE
A	05/26/11	XXXXXX	UPDATE DRAWING FORMAT
B	07/15/11	2199	ECR 2199
C	03/15/13	2435	ADD RECOMMENDED PCB LAYOUT, ADD ELECTRICAL SPEC. UPDATE DRAWING FORMAT
D	07/31/13	2505	MODIFY RECOMMENDED PCB LAYOUT

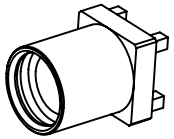

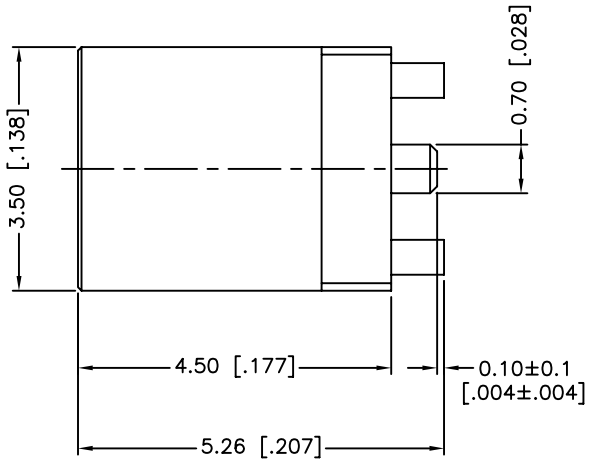

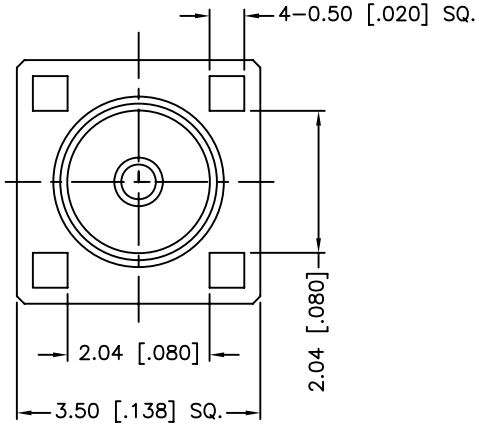

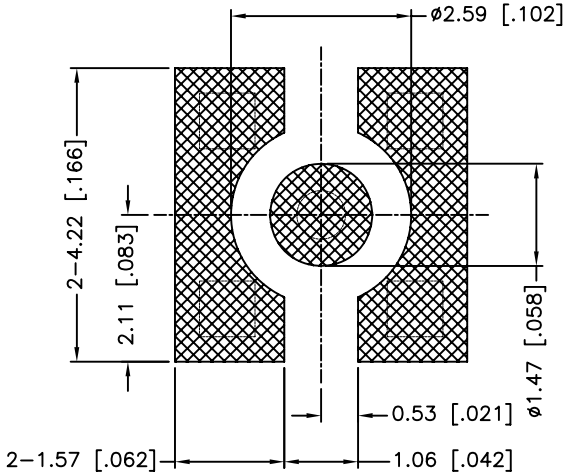

RECOMMENDED MOUNTING PATTERN

1. IMPEDANCE: 50 OHM
2. FREQUENCY RANGE: 0−6 GHZ
3. VSWR: 1.3 MAX.
3. DIELECTRIC WITHSTANDING VOLTAGE: 500 VRMS, MIN.
4. DURABILITY: 500 CYCLES MIN.
5. TEMPERATURE RANGE: −65°C TO +165°C

	DESCRIPTION	MATERIAL	FINISH	QTY
3	CONTACT PIN	BER. COPPER	GOLD	1
2	INSULATOR	PTFE	NATURAL	1
1	BODY	BRASS	GOLD	1

UNLESS OTHERWISE SPECIFIED DIMENSIONS ARE IN MILLIMETERS. DIMENSIONS IN [ ] ARE IN INCHES AND FOR CUSTOMER REFERANCE ONLY.
UNLESS OTHERWISE SPECIFIED TOLERANCES FOR MILLIMETERS ARE:
<0.5 ± 0.05mm
0.5 − 6mm ± 0.10mm
6 − 30mm ± 0.20mm
30 − 120mm ± 0.30mm
ANGLES ± 1°
UNLESS OTHERWISE SPECIFIED TOLERANCES FOR INCHES ARE:
<.020 ± 0.002"
.020 − .236 = ± 0.004"
.236 − 1.180 = ± 0.007"
1.180 − 4.724 = ± 0.012"
ANGLES ± 1°

DO NOT SCALE DRAWING

APPROVALS		DATE
DRAWN	M.ZHANG	07/31/13
CHECKED		
ISSUED		
SHEET	1 OF 1	

CAD FILE C:/CONNEX/262109.DWG

Amphenol Connex

PART DESCRIPTION: MMCX SURFACE MOUNT JACK

PART NO. 262109

DWG. NO. 262109.DWG | REV. D | SIZE A | SCALE NA