NOTES:

1. MATERIAL
   - HOUSING : PBT, GLASS FILLED, UL RATED 94V-0, BLACK
   - FRONT SHELL: CARBON STEEL
   - CONTACTS, BOARDLOCKS AND INSERTS: BRASS
2. FINISH
   - FRONT SHELL: TIN PLATED.
   - CONTACTS: GOLD FLASH IN MATING AREA OVER 2.54 um [.000100] MIN
     - NICKEL ON ENTIRE CONTACT AREA.
     - TIN PLATING ON SOLDER TAILS,
   - BOARDLOCKS AND INSERTS: TIN PLATED
3. ELECTRICAL SPECIFICATION:
   - 17-30 OHMS AT 30 MHz. TYP.
   - 22-37 OHMS AT 50 MHz. TYP.
   - 29-40 OHMS AT 100 MHz. TYP.
4. SCI, 56-402-001 AND DATE CODE MARKED ON THIS SURFACE.

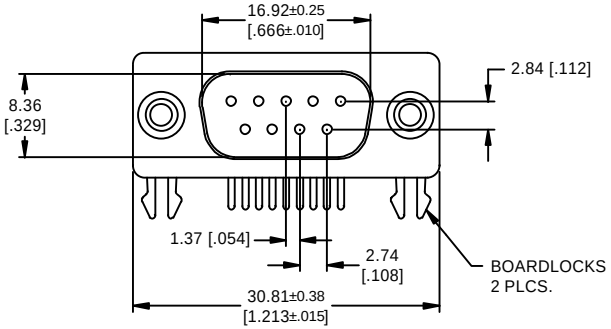

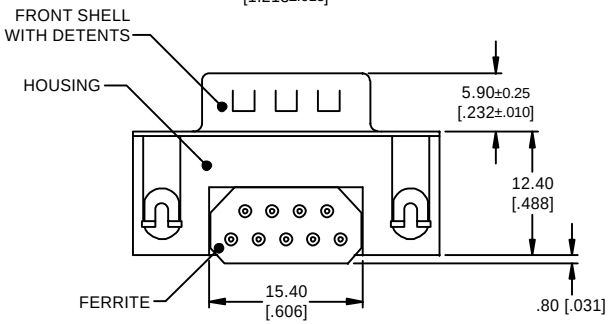

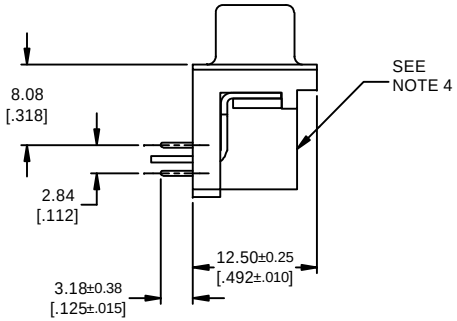

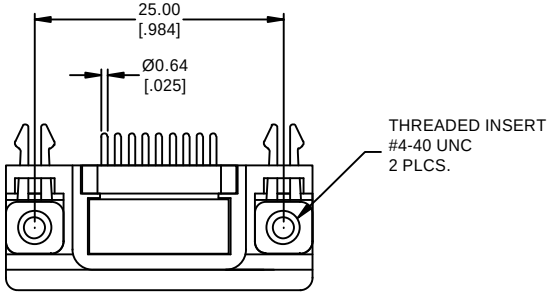

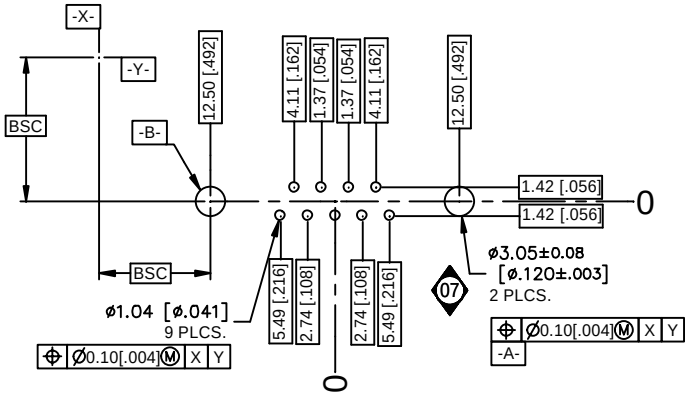

P.C. BOARD MOUNTING DIMENSIONS

REV. NO.	CHANGE NOTICE
07	CN 36554-ENG
06	CN 34916-CPD
05	CN 30099-CPD
04	CN 99146

UNLESS OTHERWISE SPECIFIED DIMENSIONS ARE IN MILLIMETERS. [INCHES]

DO NOT SCALE.

THIRD ANGLE PROJECTION

TOLERANCES UNLESS OTHERWISE SPECIFIED
Dec. .x ± 0.3 [.012]
Dec. .xx ± 0.13 [.005]
Dec. .xxx ±
Angles ±

CODE IDENT. NO. 0LSP2

SPECTRUM CONTROL INC.

FAIRVIEW PENNSYLVANIA

Dwn. P. Wells
Date 8-16-07
Engr. D. Henry
Sheet 1 of 1

PLUG ASSEMBLY
9 POSITION, RIGHT ANGLE

56-402-001

Quality Products From The Specialists In Electro—Magnetic Compatibility