SPECIFICATIONS		
OPERATING TEMP. RANGE	-25°C TO +125°C.	
WORKING VOLTAGE	85°C.	----
	125°C.	100 VDC
CURRENT	5 AMPS MAX.	
POSITIONS	1 THRU 9	
SCHEMATIC		
CAPACITANCE†	SEE CHART	
D.W.V.†	300 VDC	
I.R.†	1 G OHM MIN.	

† ALL TEST CONDITIONS AT 25°C. 50% RELATIVE HUMIDITY.
CAP. PER MIL-STD-202 METHOD 305, 1.0 VRMS MAX. 1KHz.
D.W.V. PER MIL-STD-202 METHOD 301, 1-5 SEC. 50 mA MAX.
I.R. PER MIL-STD-202 METHOD 302.
I.L. PER MIL-STD-220, NO LOAD CONDITION.

SCI PART NO.	CAPACITANCE		MINIMUM INSERTION LOSS DECIBELS - (db)			
	VALUE	TOLERANCE	20 MHz	100 MHz	500 MHz	1 GHz
56-504-013-GBL	1000 pF FT	±30%	6	19	32	38

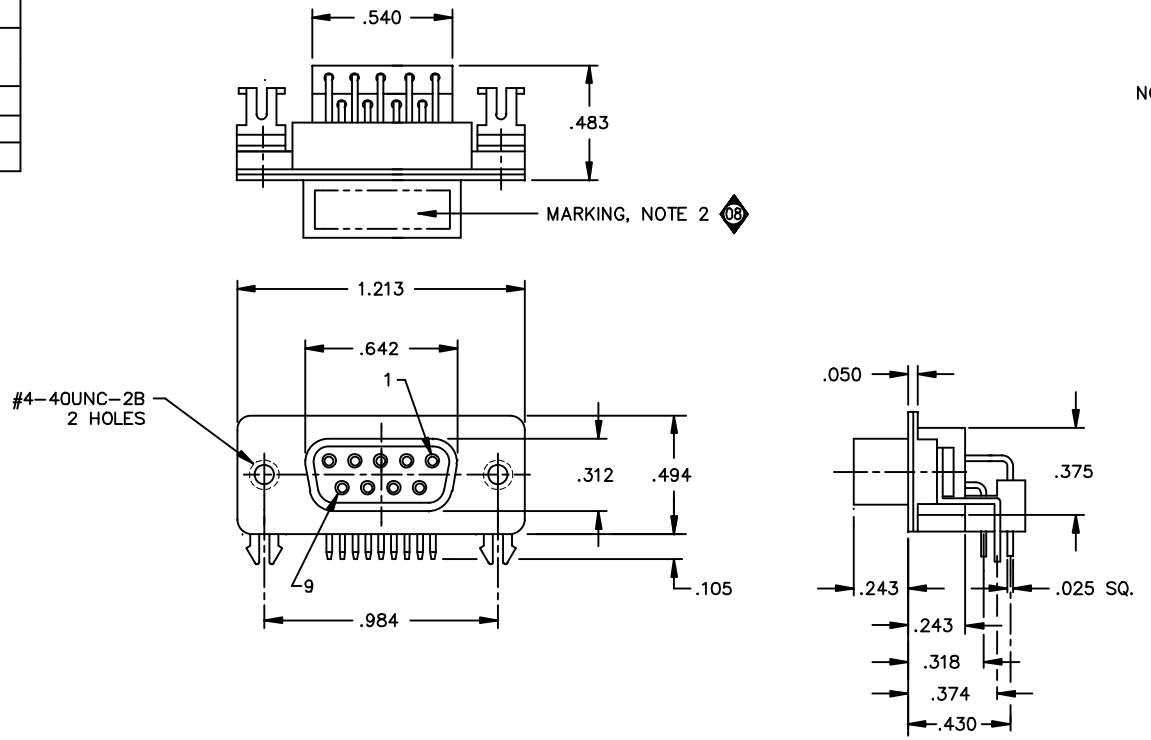

NOTE:
1. SHELL: STEEL, TIN PLATED.
INSULATOR: UL 94V-O
CONTACT; COPPER ALLOY, .000015 GOLD PLATED IN SOCKET CONTACT MATING AREA.

08 2. MARKING:
SCI 56-504-013-GBL
XXXX XXXXXX
DATE CODE — MANUFACTURING CODE

REV. NO.	CHANGE NOTICE	
8	CN 39995-ENG	
7	CN 202021 REDRAWN	

UNLESS OTHERWISE SPECIFIED DIMENSIONS ARE IN INCHES.

DO NOT SCALE.

TOLERANCES UNLESS OTHERWISE SPECIFIED
Fractions ± 1/64
Dec. .xx±
Dec. .xxx± .015
Angles ±0° 30'

CODE IDENT. NO. OLSP2

SPECTRUM CONTROL INC.

FAIRVIEW PENNSYLVANIA

Dwn. KRDZALIC
Date: 2-26-08
Engr. GRUNAUER
Sheet 1 of 1

Description: 9 POSITION LOW PROFILE, SKT./RT. ANGLE FILTERED CONNECTOR

B 56-504-013-GBL
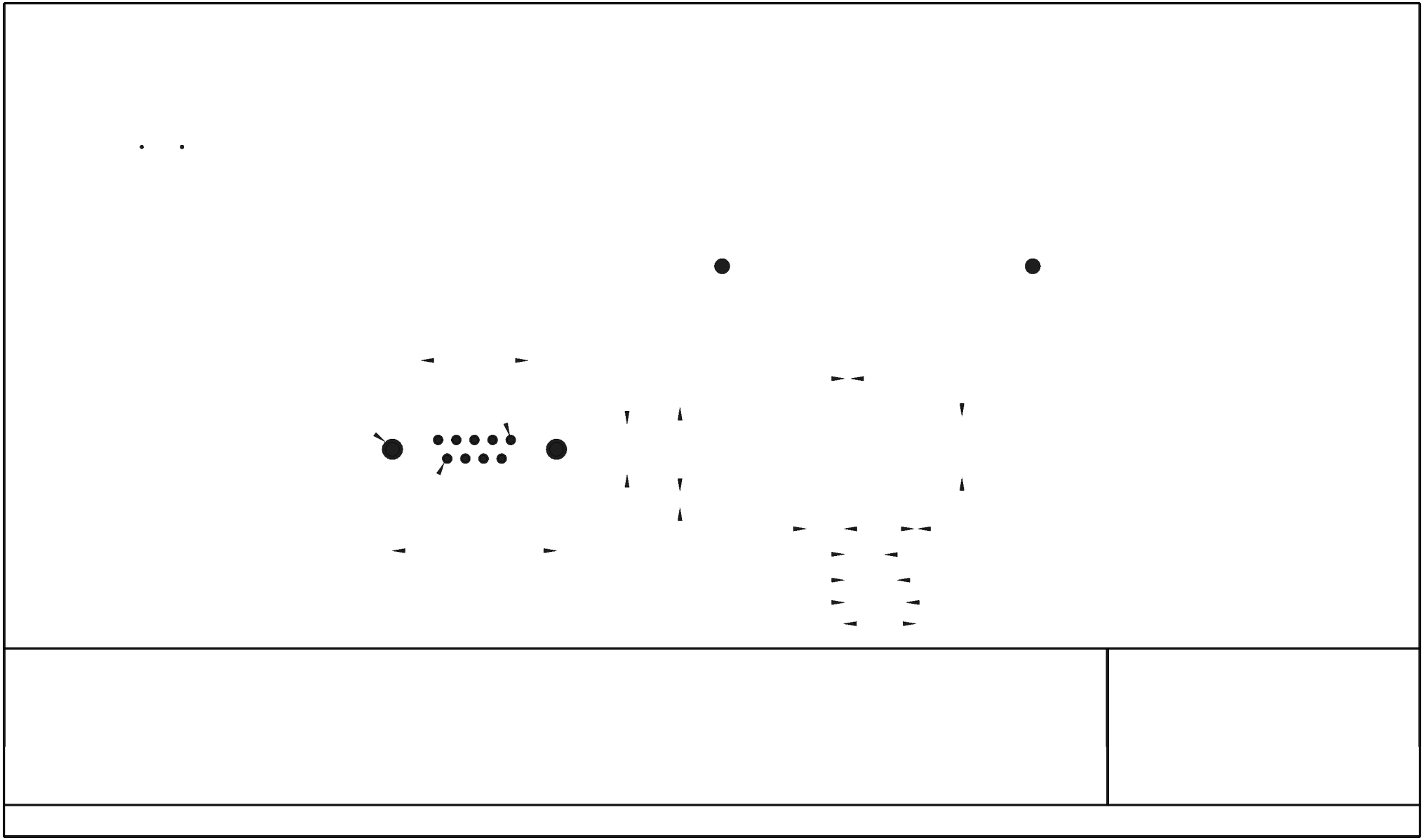
Quality Products From The Specialists In Electro-Magnetic Compatibility