Alle Rechte vorbehalten/ *All rights reserved*

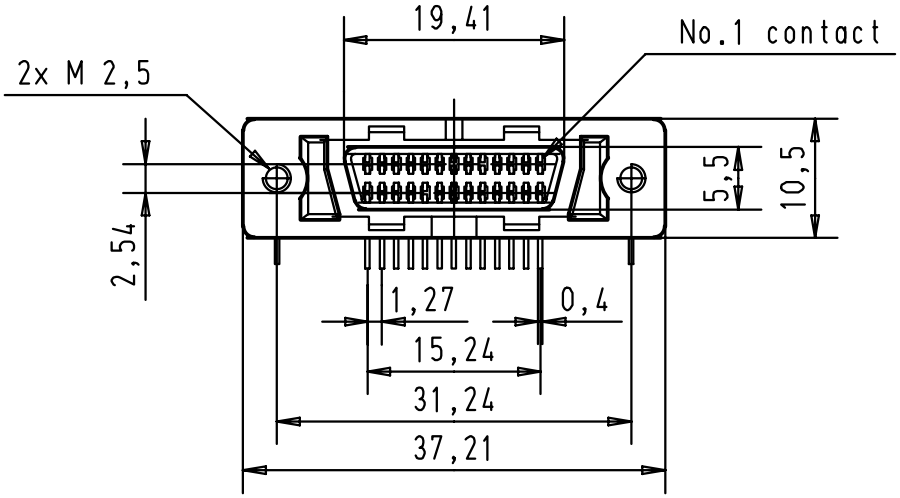

Printed board layout
Component side

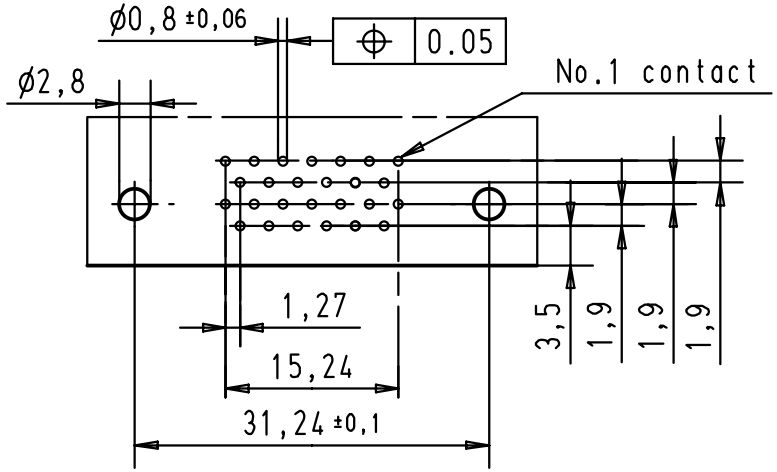

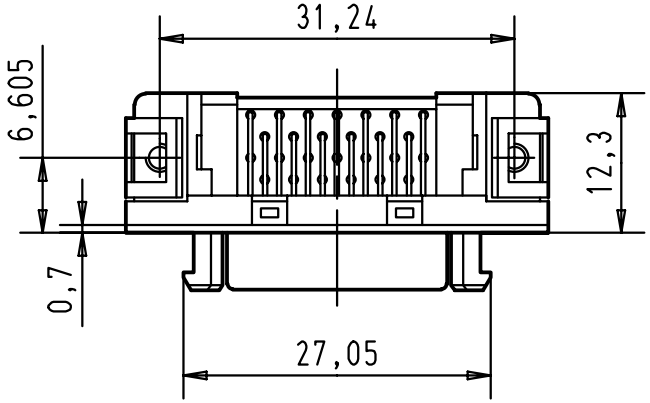

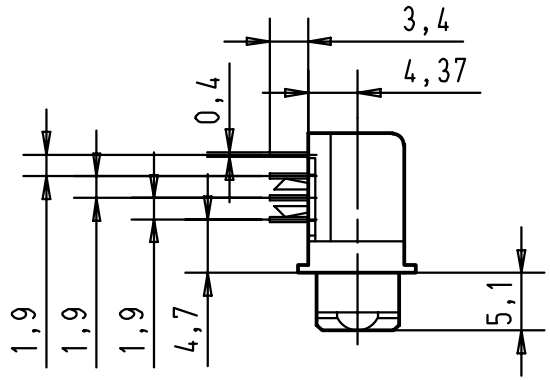

				Dat.	Name			Maßstab/ *Scale*
			Detail.	21-JUN-01	SG	All Dim. in mm Orig. Size DIN A 4	*har.mik®* I/O pin/socket 26 poles female connector with angled solder pins, board lock, fixed latching, panel fixing 2x M2,5	1,5:1
			Insp.					
			Stand.					
29686	21-JUN-01	SG	HARTING EURL F-95972 Paris				TB 60 01 026 5140	Blatt/*Page* 1/1
Mod.	Dat.	Name					Sub.	