Apr.1.2017 Copyright 2017 HIROSE ELECTRIC CO., LTD. All Rights Reserved.

	COUNT	DESCRIPTION OF REVISIONS	BY	CHKD	DATE		COUNT	DESCRIPTION OF REVISIONS	BY	CHKD	DATE
△					. .	△					. .
△					. .	△					. .
△					. .	△					. .

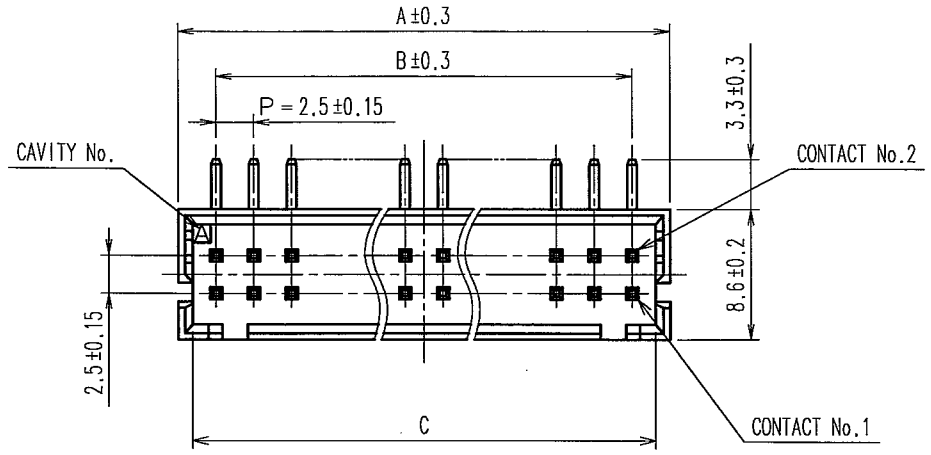

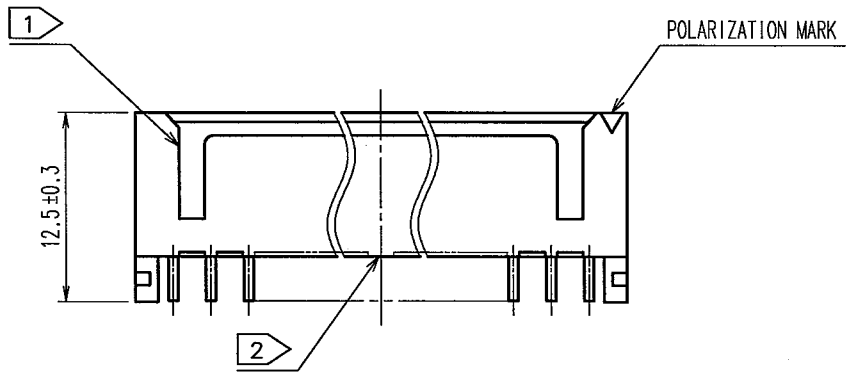

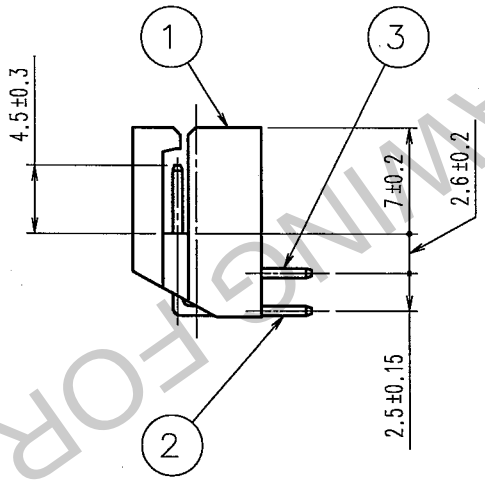

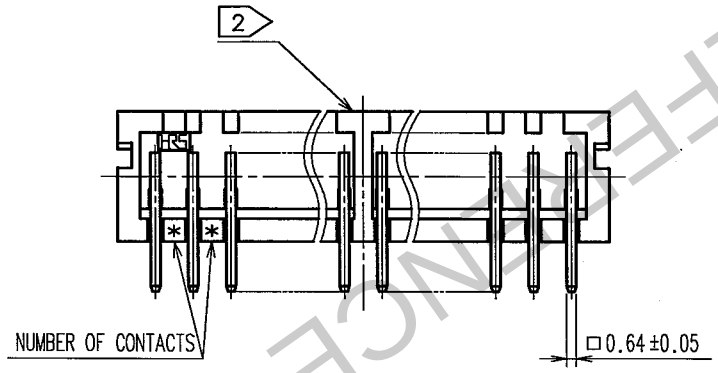

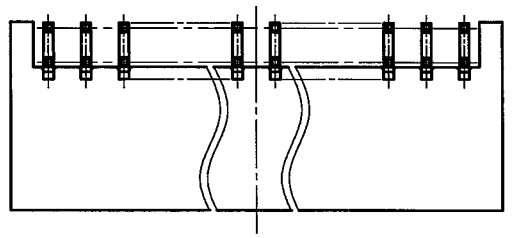

CODE NO	PART NO	CONTACT	A	B	C
CL541-0654-3-01	DF1B- 4DP-2.5DS(01)	4	7.5	2.5	5.6
CL541-0655-6-01	DF1B- 6DP-2.5DS(01)	6	10.0	5.0	8.1
CL541-0656-9-01	DF1B- 8DP-2.5DS(01)	8	12.5	7.5	10.6
CL541-0632-0-01	DF1B-10DP-2.5DS(01)	10	15.0	10.0	13.1
CL541-0633-3-01	DF1B-12DP-2.5DS(01)	12	17.5	12.5	15.6
CL541-0634-6-01	DF1B-14DP-2.5DS(01)	14	20.0	15.0	18.1
CL541-0635-9-01	DF1B-16DP-2.5DS(01)	16	22.5	17.5	20.6
CL541-0636-1-01	DF1B-18DP-2.5DS(01)	18	25.0	20.0	23.1
CL541-0637-4-01	DF1B-20DP-2.5DS(01)	20	27.5	22.5	25.6
CL541-0638-7-01	DF1B-22DP-2.5DS(01)	22	30.0	25.0	28.1
CL541-0639-0-01	DF1B-24DP-2.5DS(01)	24	32.5	27.5	30.6
CL541-0640-9-01	DF1B-26DP-2.5DS(01)	26	35.0	30.0	33.1
CL541-0641-1-01	DF1B-28DP-2.5DS(01)	28	37.5	32.5	35.6
CL541-0642-4-01	DF1B-30DP-2.5DS(01)	30	40.0	35.0	38.1
CL541-0644-0-01	DF1B-34DP-2.5DS(01)	34	45.0	40.0	43.1
CL541-0645-2-01	DF1B-36DP-2.5DS(01)	36	47.5	42.5	45.6
CL541-0647-8-01	DF1B-40DP-2.5DS(01)	40	52.5	47.5	50.6

RECOMMENDED PATTERN(5:1)

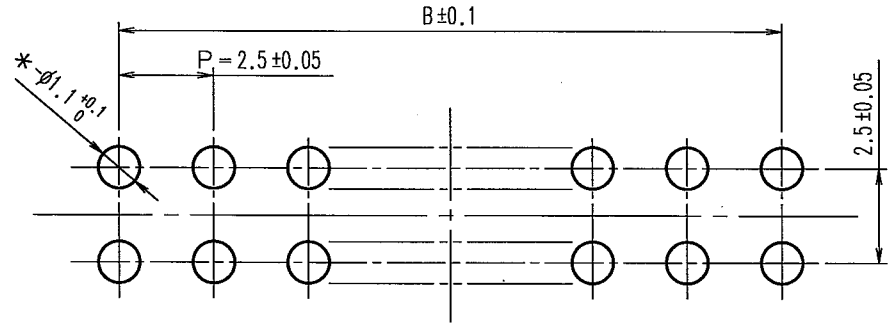

NOTE 1: FOR 4 AND 6 CONTACTS,ONE MIS-INSERTION DEPRESSION SHALL BE MADE,FOR OTHERS, 2 MIS-INSERTION DEPRESSION AS SHOWN IN FIGURE 2.
2: STAND-OFF SHALL MOVE RIGHT FOR 1.25 WHEN ONE-SIDE,ONE-ROW IS ODD. (Stand-off design shall be available for eight contacts and over)

NO.	MATERIAL	FINISH, REMARKS
2	BRASS	SURFACE:GOLD PLATED 0.2μm min UNDER PLATING:NICKEL PLATED 1μm min
1	POLYAMIDE	NATURAL(WHITE),UL94V-0

NO.	MATERIAL	FINISH, REMARKS
3	BRASS	SURFACE:GOLD PLATED 0.2μm min UNDER PLATING:NICKEL PLATED 1μm min

CODE NO.(OLD)	DRAWN	DESIGNED	CHECKED	APPROVED	RELEASED
	A.Miura '06.02.15	J.Denkouya '06.02.15	H.Umehara '06.02.20	T.Ona '06.02.20	

SCALE 2 : 1
UNITS mm

DRAWING NO. EDC3-071801-03

HRS HIROSE ELECTRIC CO., LTD

PART NO. DF1B-*DP-2.5DS(01)

CODE NO. CL541

1/1

TO

DRAWING FOR REFERENCE