THIS DRAWING IS UNPUBLISHED.
VERTRAULICHE UNVEROEFFENTLICHTE ZEICHNUNG
RELEASED FOR PUBLICATION ,1998
FREI FUER VEROEFFENTLICHUNG
© COPYRIGHT 1998 BY AMP INCORPORATED. ALL RIGHTS RESERVED.
ALLE RECHTE VORBEHALTEN

MATED WITH:
PASSEND ZU:
HE.10

LOC	DIST
AI	-

PROJEKT NR.: -

REVISIONS
AENDERUNGEN

P	LTR	DESCRIPTION BESCHREIBUNG	DATE	DWN	APVD
	A8	text for packaging corrected ECR-08-001868	22.01.08	SR	ST

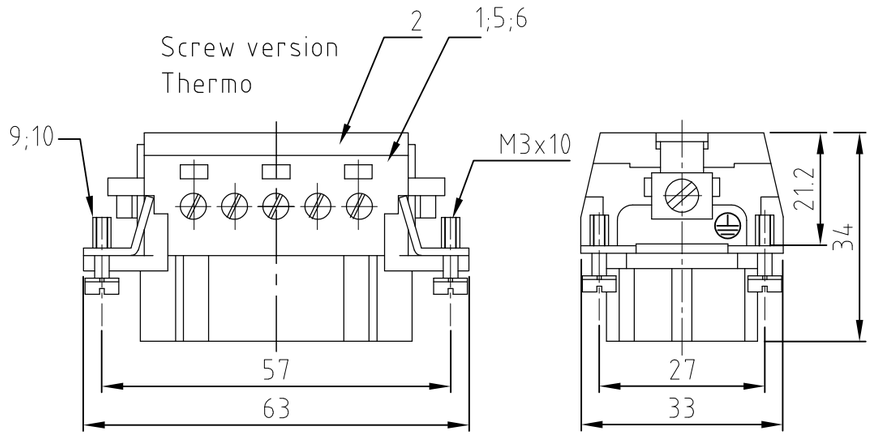

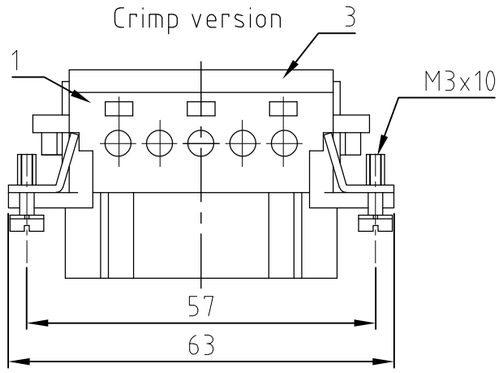

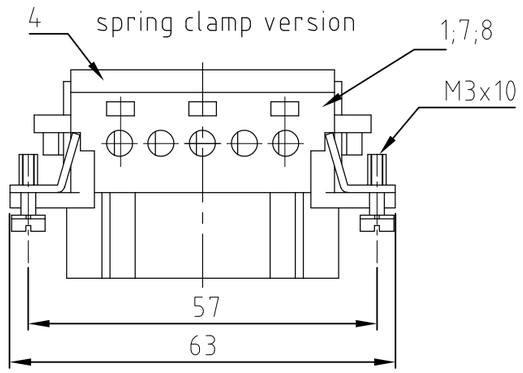

assembly directions

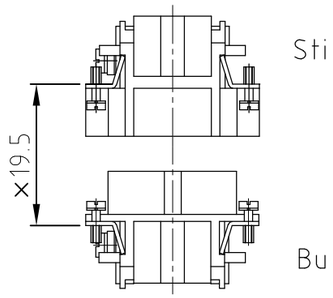

×distance for a safe contact max: max: 21 mm

Printing 1-10 Thermo

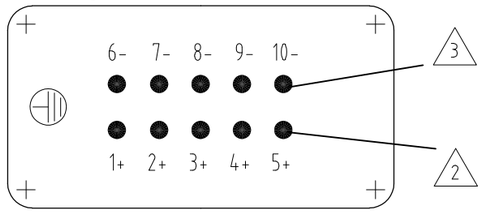

3 Contact arrangement

2 view from termination side

Printing 1-10 Screw

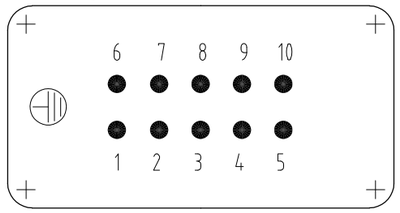

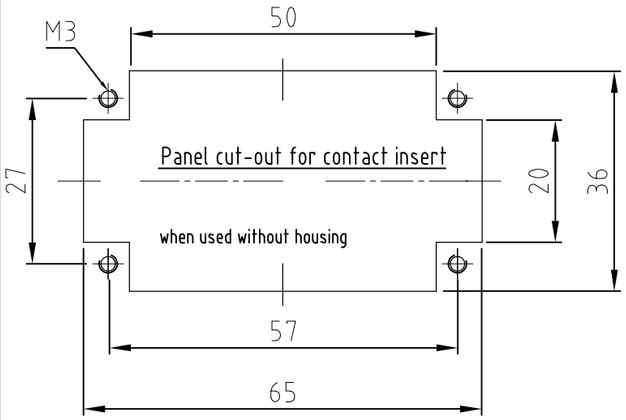

NOTES:

1 SUITABLE CRIMP CONTACTS: SERIES HE/HA
OUTER DIMENSIONS OF INSULATION: MAX. Ø3,2 MM

2 SUITABLE HOOD SIZE 4: SERIES HB; HD;HIP;EMV
SUITABLE INSERTION AND EXTRACTION TOOL:
SCREWDRIVER 0,5x3 DIN 5264

3 Strip lenght: Screw conection 10mm
Spring clamp conection 10mm Crimp conection 7.5mm

4 STANDARDS:
DIN EN 61984; DIN EN 60664-1

5 PACKAGING:
5 SETS IN A CARTON, PRE-MOUNTED

6 SPECIAL PACKAGING: Krauss-Maffei
PACKAGING UNIT: 250 PIECES

		4						fixing screw	stainless steel	even		10	M3x10
4	4		4	4	4	4	4	fixing scew	steel	nickel plated	blue	9	M3x10
10								contact socket spring clamp	brass	gold plated		8	
				10				contact socket spring clamp	brass	silver plated		7	
			10					contact socket screw version	brass	gold plated		6	
	10	10					10	contact socket screw version	brass	silver plated		5	
1				1				cover spring clamp version			light grey	4	
					1			cover crimp version			light grey	3	
	1	1	1			1	1	cover screw version			light grey	2	
1	1	1	1	1	1	1	1	socket insert			light grey	1	
0-3	0-2	0-1	9-5	7-1	2-3	1-7	1-1	DESCRIPTION	MATERIAL	SURFACE	COLOR	ITEM NO. POS.	REMARKS
5	6	5	5	5	5	5	5						
HE.10.Bu.SC-AU	HE.10.Bu.S.KM	HE.10.Bu.S-VA	HE.10.Bu.S-AU	HE.10.Bu.SC	HE.10.Bu.C	HE.10.Bu.S-T	HE.10.Bu.S	ORDERING TEXT / BESTELLTEXT					

THIS DRAWING IS A CONTROLLED DOCUMENT FOR AMP INCORPORATED.
IT IS SUBJECT TO CHANGE AND THE CONTROLLING ENGINEERING ORGANIZATION SHOULD BE CONTACTED FOR THE LATEST REVISION.
DIESES ZEICHNUNGSDOKUMENT WIRD DURCH AMP INCORPORATED KONTROLLIERT.
AENDERUNGEN, DIE DEM TECHNISCHEN FORTSCHRITT DIENEN, SIND VORBEHALTEN.
DEN JEWEILS LETZTGUELTIGEN AENDERUNGSSTAND ERFAHREN SIE AUF ANFRAGE.

DIMENSIONS: DIMENSIONEN: mm

TOLERANCES UNLESS OTHERWISE SPECIFIED:
ALLGEMEINTOLERANZEN
n. ISO 8015
n. ISO 2768 - mH -E
n. DIN 16901 - 140
0 PLC #
1 PLC #
2 PLC #
3 PLC #
ANGLES /WINKEL #

MATERIAL

FINISH /OBERFLAECHE/FARBE

DWN Gräf 09.02.99
CHK Schweiger 18.02.99
APVD -
PRODUCT SPEC PRODUKTSPEZ. -
APPLICATION SPEC VERARBEITUNGSSPEZ. -
WEIGHT GEWICHT -

AMP
HTS Elektrotechnik
53819 Neunkirchen, Germany

NAME
Female insert
Buchseneinsatz HE.10.Bu

SIZE	CAGE CODE	DRAWING NO ZEICHNUNGS-NR.	RESTRICTED TO NUR FUER
A3	00779	C- 1103637	-

CUSTOMER DRAWING /KUNDENZEICHNUNG

SCALE MASSSTAB	SHEET BLATT	OF VON	REV.
1:1	1	1	A8