PRODUCT NUMBER

93689–YXX–XXLF

PLATING, SEE TABLE

LEAD FREE
SEE NOTE 6 & 7

TOTAL NB OF POS
02 TO 36

PIN STYLE	DIM "A" REF	DIM "B" ±0.3	DIM "L" REF
01	7.50	4.50	14.78
02	10.14	4.50	17.40
03	5.68	4.50	12.83
04	14.80	4.75	22.15
05	8.30	4.50	15.44
06	6.80	3.60	12.90
07	17.50	3.60	23.85
08	12.20	3.00	17.74
09	9.26	3.20	14.96

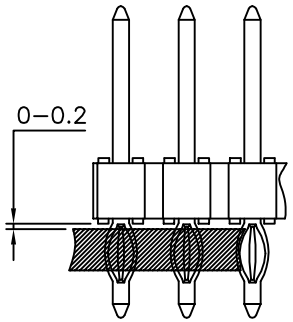

RECOMMENDED
POSITION ON THE PCB

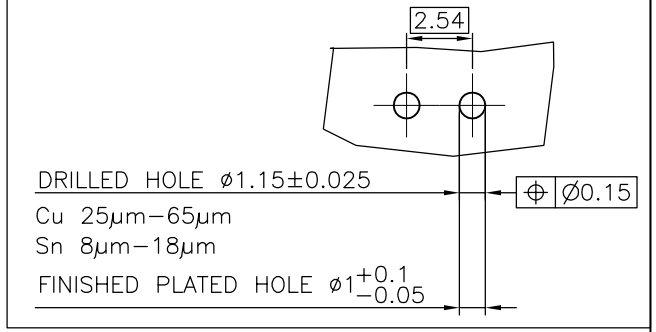

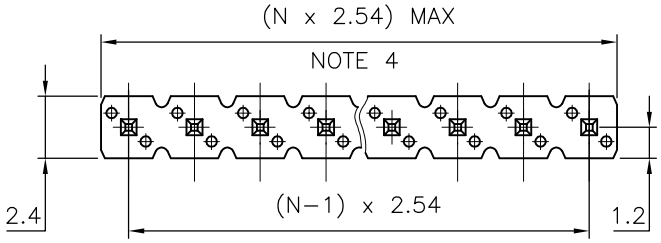

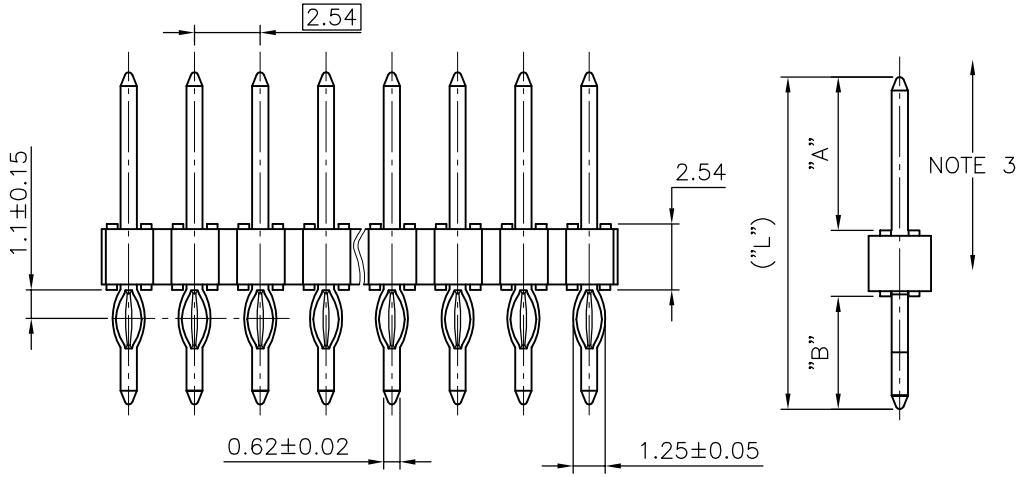

NOTES:

1 – HOUSING MAT'L : HIGH TEMPERATURE THERMOPLASTIC. UL94V–0 COLOR: BLACK

2 – PIN MATERIAL : PHOSPHOR BRONZE

3 – 9N MIN RETENTION IN EITHER DIRECTION

4 – TO DETERMINE DIMENSIONS :
N = NUMBER OF POSITIONS PER ROW
EXAMPLE : 8 POS PER ROW, N x 2.54 = 20.32mm

5 – STANDARD PACKAGING IN POLYBAGS

6 – LEAD FREE CONNECTOR

7 – "LF" MEANS THAT THE PRODUCT IS RoHs COMPLIANT THEN MEETS EUROPEAN UNION DIRECTIVES AND OTHER COUNTRY REGULATION AS DESCRIBED IN GS–47–004

XXXXX–TXXLF	2µm MIN FULL MATTE TIN PIN TYP PLATED OVER 1.27µm Ni MIN	
XXXXX–9XXLF	0.2µm GOLD OVER 1.27µm Ni MIN	
XXXXX–5XXLF	0.25µm GOLD/GXT OVER 1.27µm Ni MIN	1.0µm TIN OVER 1.27µm
XXXXX–4XXLF	3.05µm TIN OVER 1.27µm Ni MIN	
XXXXX–1XXLF	0.76µm GOLD/GXT OVER 1.27µm Ni MIN	1.0µm TIN OVER 1.27µm
PLATING NUMBER	CONTACT AREA	PRESS FIT TAIL AREA

ltr	ecn no	dr	date
R	B–20781	AMA	15.04.28
L	B–16777	JCO	14.01.21
M	B–18988	LMU	14.10.06
N	B–16427	LMU	14.11.04
P	B–20744	LMU	15.04.23

mat'l. code

surface ISO 1302

tolerance ISO 406 ISO 1101

tolerances unless otherwise specified: angles; linear .x ±0.3, .xx ±0.15, .xxx ±0.05

projection

mm

scale 5:1

dr	COMPAGNON J	95.07.25
engr	JMC	95.07.24
chr		
appd	JMC	95.07.25

product family: BSTIK

title: HEADER P–FIT SINGLE ROW

dwg no: 93689

sheet 1 of 1

size: A3

type: CUSTOMER Drawing

sheet index | revision sheet

form: A3

FCIconnect.com
Copyright FCI