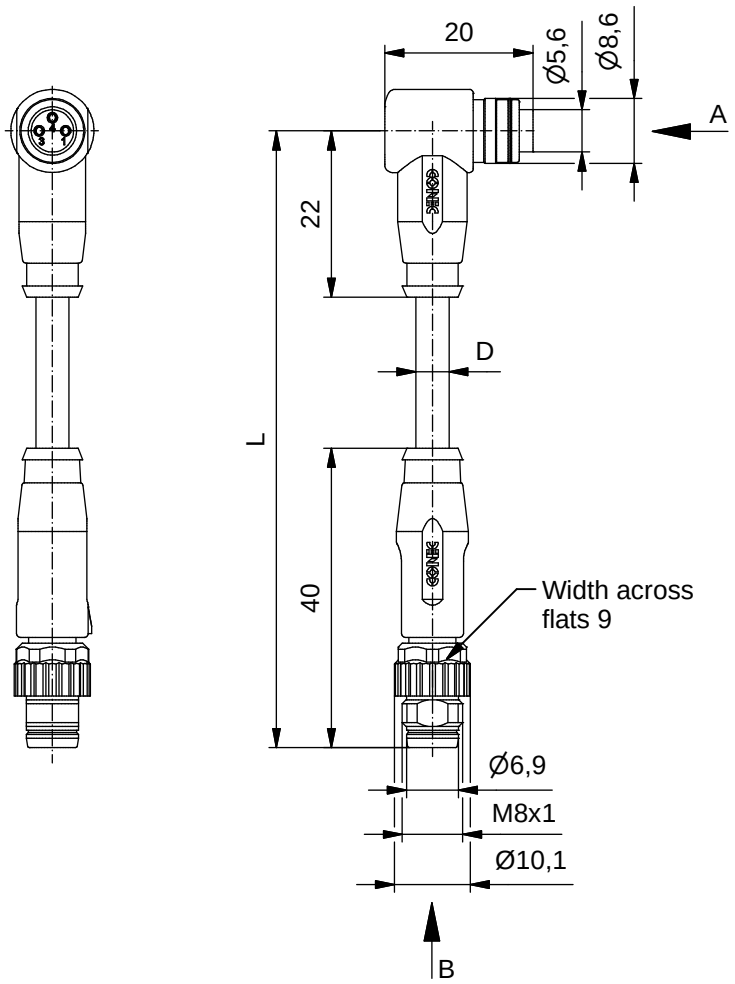

Technical specification :

Rated voltage: IEC 61076-2-104	60 V
Current rating: IEC 61076-2-104	3 A at 40℃
Insulation resistance: IEC 60512	>=100 MΩ
Pollution degree: IEC 60664-1	3/2
Degree of protection: IEC 60529	IP 67, in mated condition
Temperature range: IEC 60664-1	-30℃ ... +80℃
Mating cycles: IEC 60512-9a	>=100

Materials:

Contact:	CuZn
Contact plating:	Nickel, gold plated
Contact carrier:	TPU GF, UL 94
Coupling screw:	GD-Zn, nickel plated
Moulding body:	TPU, UL 94, grey

Installation specification:

Recommended torque:	0,4 Nm
Conec installation tool:	Torque wrench: 36-000200 Insert across flats 9: 36-000210

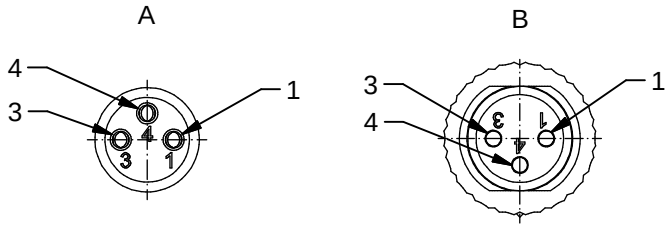

Contact assignment:

1 brown
3 blue
4 black

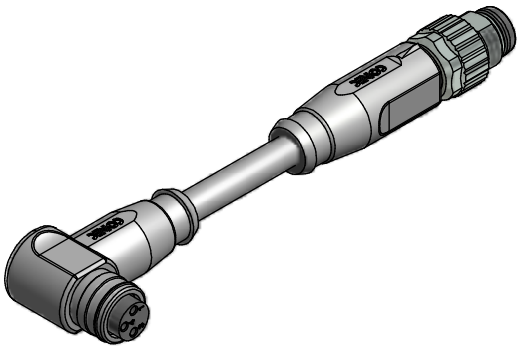

Part no:	Description:	Length L:	Cable:
42-10181	SAL - 8 - RKWS3 - RSU3 - 0,3 / A1	0,3m	PVC, grey, 3x0,25mm² Cable: 781-A12300
42-10182	SAL - 8 - RKWS3 - RSU3 - 0,6 / A1	0,6m	
42-10183	SAL - 8 - RKWS3 - RSU3 - 1,5 / A1	1,5m	
42-10184	SAL - 8 - RKWS3 - RSU3 - 3 / A1	3,0m	
42-xxxxx	SAL - 8 - RKWS3 - RSU3 - ... / A1	x	

D see data sheet cable

DO NOT ALTER CAD DRAWING BY HAND

Directive 2002/95/EC RoHS compliant

Index: a 24.03.11 VF Ä3945
Coupling screw modified, spanner flats added, data sheet modified

tolerance of cable: L <= 4m: L + 40mm
L > 4m: L + 1%

THIS DRAWING MAY NOT BE COPIED OR REPRODUCED IN ANY WAY, AND MAY NOT BE PASSED ON TO A THIRD PARTY WITHOUT WRITTEN PERMISSION.
OWNERSHIP AND COPYRIGHT OF CONEC GmbH

dim. in mm

	date	name
drawn	13.12.07	Franz
appd.	13.12.07	Mankopf

title: Connecting cable, female connector ø8 angled snap - male connector M8x1 axial screw/ snap

dwg no: 42K1A045

part no: see table