Customer Information Sheet

DRAWING No.: M20-974XXXX SHEET 2 OF 2	IF IN DOUBT - ASK	©	NOT TO SCALE	THIRD ANGLE PROJECTION	ALL DIMENSIONS IN mm

NOTES:
1. RECOMMENDED PCB MOUNTING HOLE SIZE = Ø1.00mm.
2. ALL TOLERANCES ARE ±0.25mm UNLESS OTHERWISE STATED.
3. FOR COMPLETE SPECIFICATION, SEE COMPONENT SPECIFICATION C001XX (LATEST ISSUE).

SPECIFICATION:
- MATERIAL:
  - MOULDING= HIGH TEMP NYLON 6T UL94V-0, BLACK
  - PINS = BRASS
- FINISH:
  - PINS:
    - 42 = GOLD ON CONTACT AREA, 100% TIN ON TAILS
    - 46 = 100% TIN OVER NICKEL
- ELECTRICAL:
  - CURRENT RATING = 3A MAX
  - CONTACT RESISTANCE = 25 mΩ MAX (GOLD), 30 mΩ MAX (TIN)
  - INSULATION RESISTANCE = 1,000 MΩ MIN
  - DIELECTRIC STRENGTH = 750V AC/DC
- MECHANICAL:
  - DURABILITY = 300 OPERATIONS (GOLD), 50 OPERATIONS (TIN)
- ENVIRONMENTAL:
  - TEMPERATURE RANGE = -40°C TO +105°C
- PACKING:
  - BAG

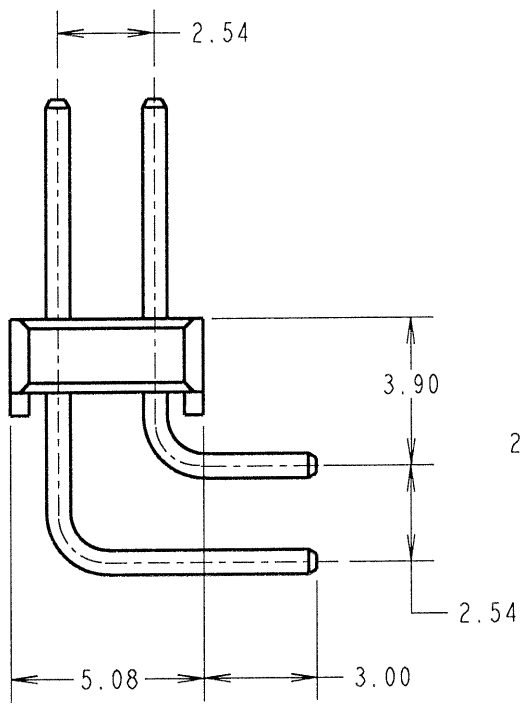

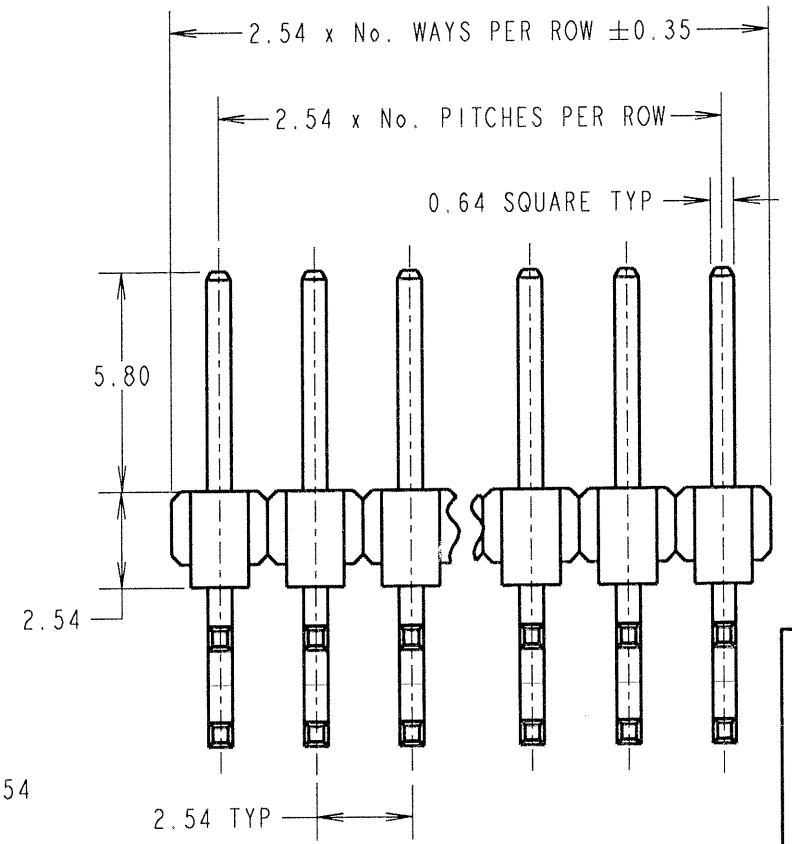

ORDER CODE:

M20-974XXXX

No. OF WAYS
02 TO 40

FINISH:
42 = SELECTIVE GOLD + 100% TIN
46 = 100% TIN

NAME	ISS.	DATE	C/NOTE
JMB	12	05.12.06	9602

APPROVED: JMB
CHECKED: DLK
DRAWN: P. ALEXANDER
CUSTOMER REF.:
ASSEMBLY DRG:

HARWIN

HARWIN INC U.S.A. TEL: (812) 542 2540 FAX: (812) 542 2541
HARWIN PLC U.K. TEL: 023 9231 4545 FAX: 023 9231 4590
HARWIN PTE SINGAPORE TEL: 65 6779 4909 FAX: 65 6779 3868

THIS DRAWING AND ANY INFORMATION OR DESCRIPTIVE MATTER SET OUT HEREON ARE CONFIDENTIAL AND COPYRIGHT PROPERTY OF THE HARWIN GROUP AND MUST NOT BE DISCLOSED, LOANED, COPIED OR USED FOR MANUFACTURING, TENDERING OR FOR ANY OTHER PURPOSE WITHOUT THEIR WRITTEN PERMISSION.

TOLERANCES
~~X.X = ±1mm~~
~~X.XX = ±0.25mm~~
~~X.XXX = ±0.10mm~~
~~X.XXXX = ±0.01mm~~
ANGLES = ±5°
UNLESS STATED

MATERIAL: SEE ABOVE
FINISH: SEE ABOVE
S/AREA: mm²

TITLE: 2.54mm PITCH SIL HORIZONTAL PC TAIL PIN HEADER ASSEMBLY

DRAWING NUMBER: M20-974XXXX

SHT 2 OF 2