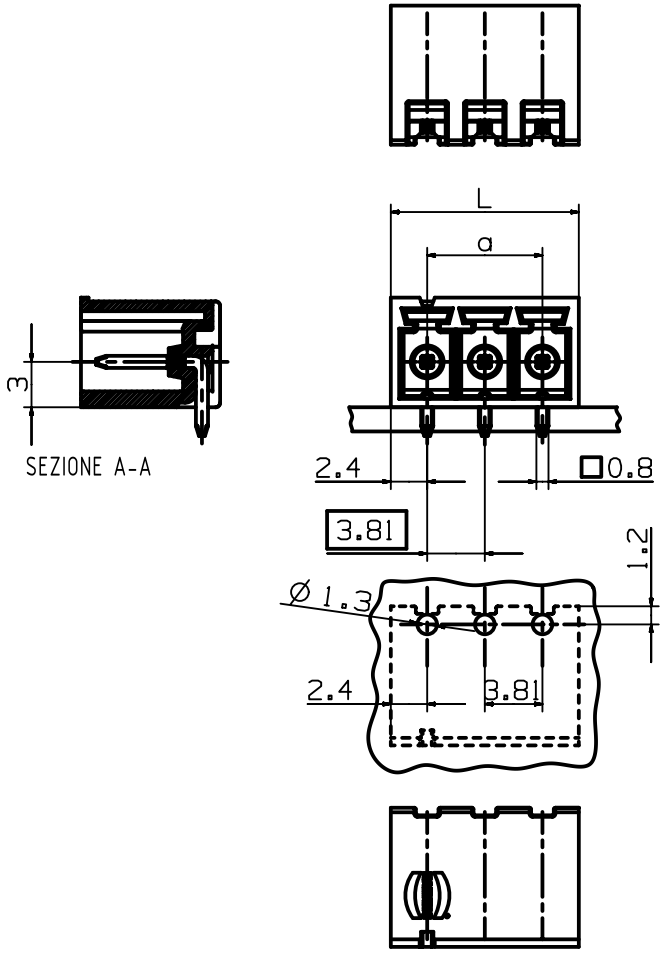

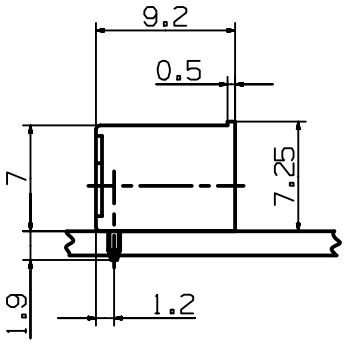

part-number	Poles	Dim. a	Dim. L
14120215002XXX	2	3.81	8.62
14120315002XXX	3	7.62	12.43
14120415002XXX	4	11.43	16.24
14120515002XXX	5	15.24	20.05
14120615002XXX	6	19.05	23.86
14120715002XXX	7	22.86	27.67
14120815002XXX	8	26.67	31.48
14120915002XXX	9	30.48	35.29
14120101500 2XXX	10	34.29	39.10
14121115002XXX	11	38.10	42.91
14121215002XXX	12	41.91	46.72
14121315002XXX	13	45.72	50.53
14121415002XXX	14	49.53	54.34
14121515002XXX	15	53.34	58.15
14121615002XXX	16	57.15	61.96
14121715002XXX	17	60.96	65.77
14121815002XXX	18	64.77	69.58
14121915002XXX	19	68.58	73.39
14122015002XXX	20	72.39	77.20
14122115002XXX	21	76.20	81.01
14122215002XXX	22	80.01	84.82
14122315002XXX	23	83.82	88.63
14122415002XXX	24	87.63	92.44
14122515002XXX	25	91.44	96.25

further information see: DS 14121300201

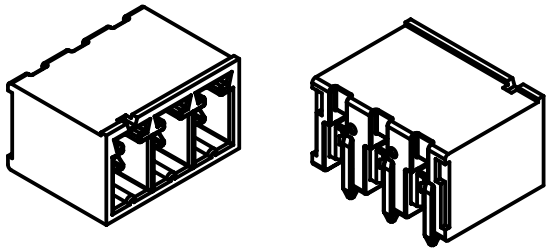

All Dimensions in mm
Original Size DIN A4

Scale 2:1

Free size tol.

Ref.
Sub. TB 1412XX1502XXX / 50000065415 / 2013-08-19

All rights reserved

Department EC PD - DE

HARTING Electronics GmbH
D-32339 Espelkamp

Created by	Inspected by	Standardisation	Date	State
HAGEMEYERE	TADJE	HOFFMANN	2014-08-11	Final Release

Title: har-flexicon 3.81 MTH-xx BX BK

Doc-Key / ECM-Nr.
100529533/UGD/001/C
500000077815

Type: TB

Number: 1412XX15002XXX

Rev. C

Page 1/1

A4