THIS DRAWING IS UNPUBLISHED. RELEASED FOR PUBLICATION -,- .
© COPYRIGHT - By - ALL RIGHTS RESERVED.

LOC	DIST
AA	22

REVISIONS

P	LTR	DESCRIPTION	DATE	DWN	APVD
	D	ECR-11-024835	20FEB2012	JJ	AC

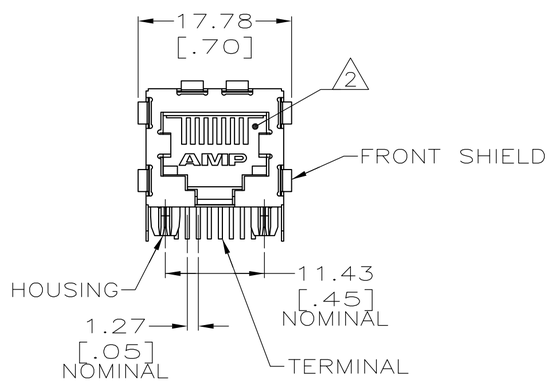

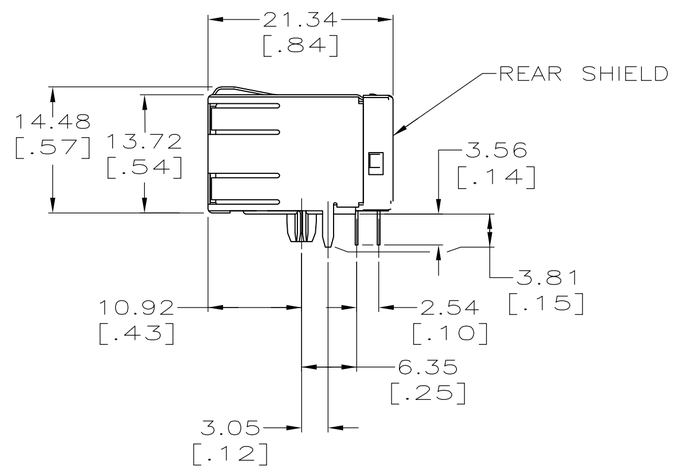

1. MATERIAL: HOUSING – NYLON, BLACK, IR REFLOW COMPATIBLE, UL 94V–0.
   TERMINALS – 0.33 [.013] THICK PHOS BRONZE PLATED WITH 1.27 µm [.000050] MINIMUM THICK HARD GOLD IN LOCALIZED AREA AND 3.81 µm [.000150] MINIMUM THICK MATTE TIN IN SOLDER AREA OVER 1.27 µm [.000050] MINIMUM THICK NICKEL UNDERPLATE.
   SHIELDS – 0.25 [.010] THICK COPPER ALLOY PLATED WITH 2.03 µm [.000080] MINIMUM BRIGHT TIN OVER 1.27 µm [.000050] MINIMUM NICKEL

2. JACK CAVITY CONFORMS TO FCC RULES AND REGULATIONS, PART 68 SUBPART F.

3. USE #30 DRILL BIT OR 3.25mm DRILL BIT WHEN PRODUCING THESE PCB HOLES.

4. MATERIAL: HOUSING – NYLON, BLACK, IR REFLOW COMPATIBLE, UL 94V–0.
   TERMINALS – 0.33 [.013] THICK PHOS BRONZE PLATED WITH 1.27 µm [.000050] MINIMUM THICK HARD GOLD IN LOCALIZED AREA AND 3.81 µm [.000150] MINIMUM THICK MATTE TIN IN SOLDER AREA OVER 1.27 µm [.000050] MINIMUM THICK NICKEL UNDERPLATE.
   SHIELDS – 0.25 [.010] THICK COPPER ALLOY PLATED WITH 1.27 µm [.000050] MINIMUM NICKEL AND 2.03 µm [.000080] MINIMUM HOT TIN DIP ON PCB GROUND TABS.

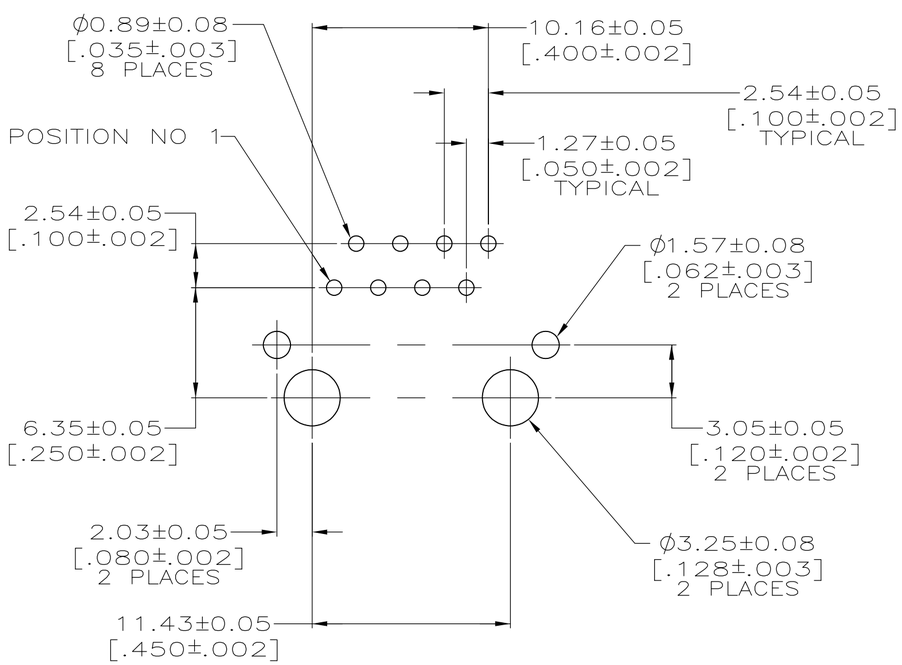

SUGGESTED PC BOARD LAYOUT
COMPONENT SIDE
SCALE 4:1

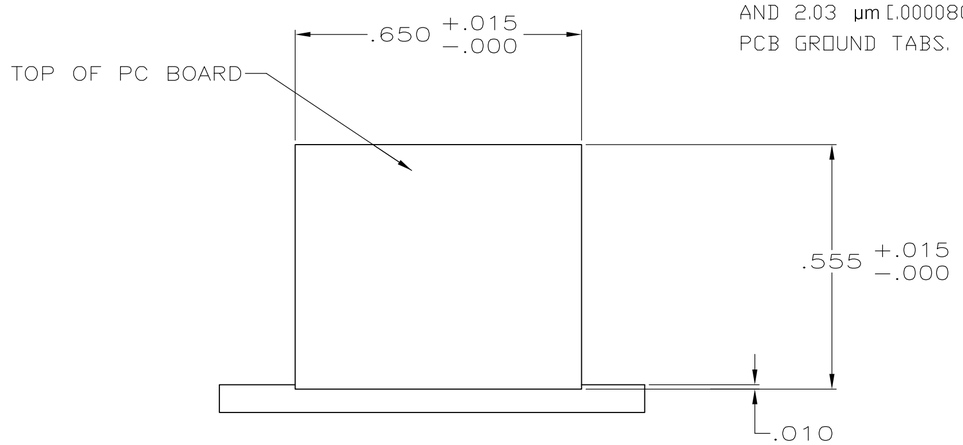

SUGGESTED PANEL CUTOUT
SCALE 4:1

	4	5406298–2
SUPERSEDED BY -2	1	~~5406298–~~1
	REMARK	PART NUMBER

THIS DRAWING IS A CONTROLLED DOCUMENT.

DIMENSIONS: mm

TOLERANCES UNLESS OTHERWISE SPECIFIED:
0 PLC ± –
1 PLC ± –
2 PLC ± 0.25[.01]
3 PLC ± 0.13[.005]
4 PLC ± –
ANGLES ± –

MATERIAL: SEE NOTE 1&4
FINISH: SEE NOTE 1&4

DWN 20APR2005 T. SPRINKLE/L.A.MAYER
CHK 20APR2005 J.WESTMAN
APVD 20APR2005 S.FLICKINGER
PRODUCT SPEC 108–1163
APPLICATION SPEC 114–2048
WEIGHT –

TE Connectivity

NAME: MODULAR JACK ASSEMBLY, SINGLE PORT, 8 POSITION, SHIELDED, REVERSE PANEL GROUND TABS, CATEGORY 4

SIZE A2 | CAGE CODE 00779 | DRAWING NO C-5406298 | RESTRICTED TO –

CUSTOMER DRAWING | SCALE 2:1 | SHEET 1 OF 1 | REV D

5406298