THIS DRAWING IS UNPUBLISHED. RELEASED FOR PUBLICATION 20
© COPYRIGHT 20 BY - ALL RIGHTS RESERVED.

PART NUMBER	REV	TERMINATOR	FEED TYPE	DESCRIPTION
1530494-1	A	LEADMAKER	MECH POST FEED	CUTS CARRIER
1530494-2	A	BENCH	MECH PRE FEED	CUTS CARRIER
1530494-6	A	LEADMAKER	MECH POST FEED	CONTINUOUS CARRIER
7-1530494-1	A	LEADMAKER	MECH POST FEED	-1 AND SPARE PARTS
7-1530494-2	A	BENCH	MECH PRE FEED	-2 AND SPARE PARTS
7-1530494-6	A	LEADMAKER	MECH POST FEED	-6 AND SPARE PARTS
7-1530494-7	A	-	-	SPARE PARTS KIT

CRIMP DATA SUMITOMO TERMINAL SUMITOMO CRIMP SPECS

TERMINAL NAME: SL060 SEALED TERMINAL, FEMALE

CRIMP	SIZE	TYPE	RANGE
WIRE	1.78 [.070 IN]	F	0.50mm
INSUL	3.61 [.142 IN]	O	Ø1.60 - 2.40 [.063-.094 IN]

WIRE STRIP LENGTH 4.21-4.59 [.166-.181 IN]

APPL INSTRUCTIONS 408-8322 & 408-8490

TERMINAL APPL SPEC - - - -

FEED 12.00 [.472 IN]

TERMINALS APPLIED

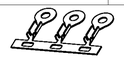

TE PN	SUMITOMO PN	TE SEAL PN	SUMITOMO SEAL PN
2113197-1	8100-3397	2113198-1	7165-0515
-	-	-	-
-	-	-	-
-	-	-	-

WIRE SIZE	CRIMP HEIGHT *	REF SETTING
0.50mm²	1.00 ±0.05 [.039 ±.002 IN]	D2
-	-	-
-	-	-
-	-	-
-	-	-
-	-	-
-	-	-
-	-	-
-	-	-
-	-	-
-	-	-

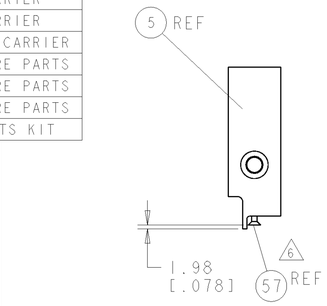

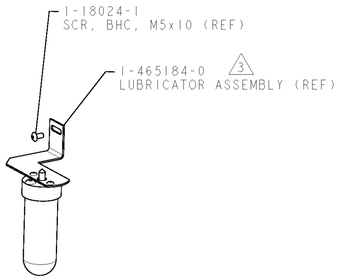

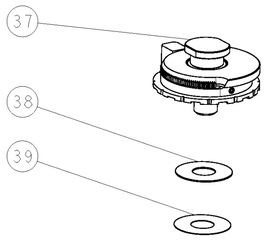

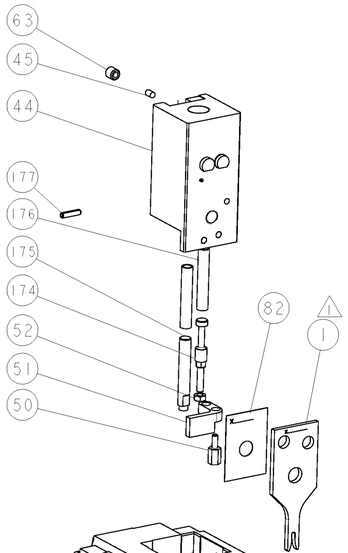

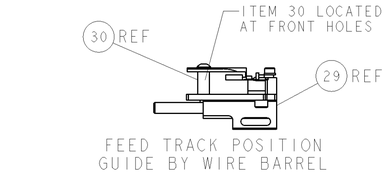

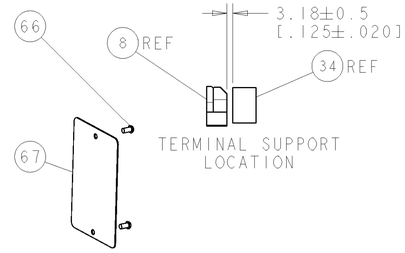

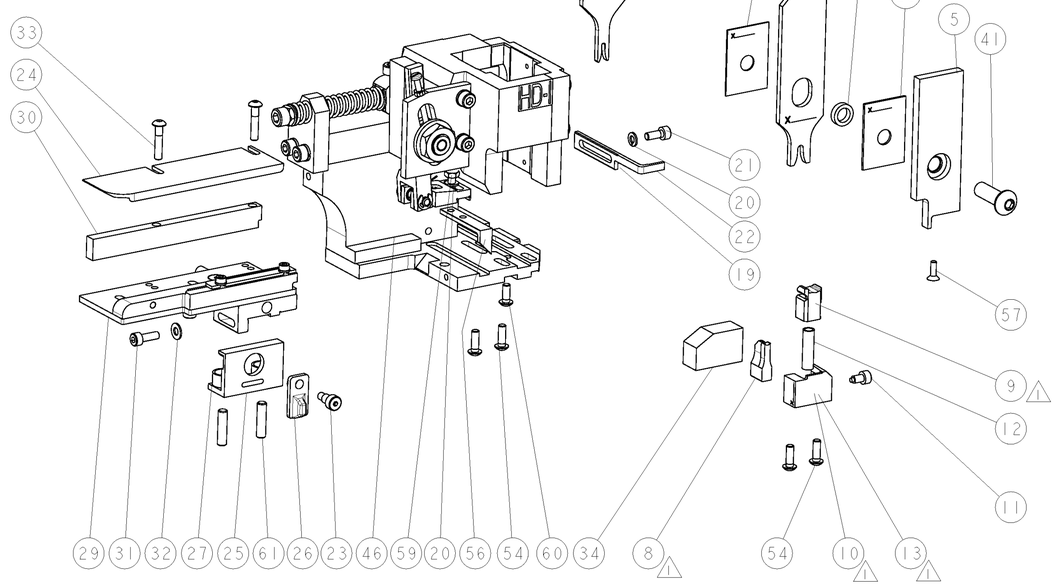

1 RECOMMENDED SPARE PARTS

2. GREASE RAM, CAM, CAM FOLLOWER AND FEED ROD LIGHTLY

3 CERTAIN TERMINALS REQUIRE LUBRICATION. REFER TO THE APPLICATOR INSTRUCTION SHEET FOR MORE INFORMATION.

4. LUBRICATE DAILY PER THE APPLICATOR INSTRUCTION SHEET SUPPLIED WITH THE APPLICATOR

5 THIS APPLICATOR APPLIES TERMINAL WITH A SEAL.

6 APPLY TORQ-SEAL IN ALLEN SOCKET TO FILL HOLE AFTER FLAT HD HAS BEEN ADJUSTED TO CORRECT HEIGHT AT QUALIFICATION. APPLY #1-23419-5 LOC-TITE TO THREADS.

VIEW B ROTATED 180°

POST-FEED 40mm STROKE	POST-FEED 30mm STROKE	PRE-FEED 30mm STROKE	PRE-FEED 40mm STROKE

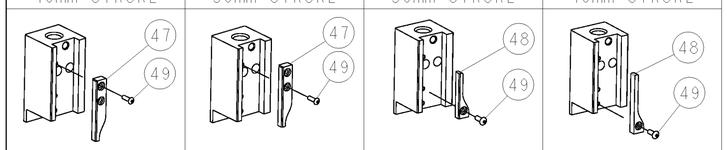

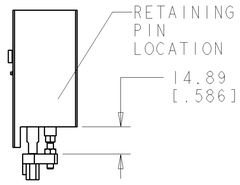

HOLDDOWN SET-UP

* WARNING
ON INSTALLATION, SET WIRE DISC TO LARGEST WIRE SIZE SETTING. USE OF SETTINGS BELOW MIN. REQUIRED CRIMP HEIGHT SETTING WILL CAUSE DAMAGE TO CRIMP TOOLING.

SET UP GAGE 458637-3

LOC	DIST
A	66

REVISIONS

P	LTR	DESCRIPTION	DATE	DWN	APVD
	1	PRE-RELEASE	22MAR2011	BH	BH
	A	RELEASED	05MAY2011	BH	BH

							PART NO	DESCRIPTION	ITEM NO
	-77	-76	-72	-71	-6	-2	-1		
	-	1	1	1	1	1	1	993111-8	PIN, SLOTTED SPRING 3.0 X 12.0	177
	-	2	2	2	2	2	2	3-22280-7	SPRING, COMPRESSION	176
	-	1	1	1	1	1	1	1752353-1	GUIDE PIN,HOLDDOWN	175
	-	1	1	1	1	1	1	1901680-1	GUIDE PIN,HOLDDOWN	174
	-	1	1	1	1	1	1	455888-1	SPACER, CRIMPER	82
	-	1	1	1	1	1	1	1338705-3	DOCUMENTATION PACKAGE	71
	-	1	1	1	1	1	1	461264-5	PLATE, IDENTIFICATION	67
	-	2	2	2	2	2	2	21017-2	SCREW, DRIVE	66
	-	1	1	1	1	1	1	3-18031-0	SCR, SET, CUP POINT M6 X 6.0	63
	-	2	2	2	2	2	2	2-18032-5	SCR, SET, FLT POINT M5 X 20.0	61
	-	1	1	1	1	1	1	18024-7	SCR, BTN SKT HD CAP (M4 X 10.0)	60
	-	1	1	1	1	1	1	5-18022-2	SCR, HEX HD CAP M4 X 8.0	59
	-	1	1	1	1	1	1	985575-3	SCR, FLT SKT HD CAP M3 X 10.0	57
	-	1	1	1	1	1	1	1338685-1	PAWL, FEED	56
	-	4	4	4	4	4	4	18024-8	SCR, BTN SKT HD CAP (M4 X 12.0)	54
	-	1	1	1	1	1	1	1-18030-0	NUT, HEX, REG M3.5	52
	-	1	1	1	1	1	1	1901681-1	HOLDDOWN, TERMINAL	51
	-	1	1	1	1	1	1	1-1752354-9	STANDOFF,HOLD-DOWN	50
	-	1	1	1	1	1	1	18024-3	SCR, BTN SKT HD CAP (M3 X 10.0)	49
	-	-	1	-	-	1	-	1338675-1	CAM, UNIVERSAL PRE FEED	48
	-	1	-	1	1	-	1	1338676-1	CAM, UNIVERSAL POST-FEED	47
	-	1	1	1	1	1	1	1320999-3	APPLICATOR SUBASSEMBLY, HDI	46
	-	1	1	1	1	1	1	690191-1	PLUG,NYLON	45
	-	1	1	1	1	1	1	1633724-1	RAM, (SIDE FEED)	44
	-	1	1	1	1	1	1	2-18024-6	SCR, BTN SKT HD CAP (M8 X 25.0)	41
	-	1	1	1	1	1	1	690125-1	SHIM SUB-ASSY	39
	-	1	1	1	1	1	1	1-469367-2	SHIM	38
	-	1	1	1	1	1	1	879103-3	FINE ADJUST HEAD ASSEMBLY	37
	-	1	1	1	1	1	1	1752356-3	SUPPORT, TERMINAL	34
	-	2	2	2	2	2	2	1-18024-0	SCR, BTN SKT HD CAP (M4 X 20.0)	33
	-	1	1	1	1	1	1	18027-2	WASHER, FLAT, REG M4	32
	-	1	1	1	1	1	1	1-18023-2	SCR, SKT HD CAP M4 X 12.0	31
	-	1	1	1	1	1	1	1-1320908-5	SPACER, STRIP GUIDE	30
	-	1	1	1	1	1	1	1633073-1	STRIP GUIDE ASSEMBLY	29
	-	1	1	1	1	1	1	1-455888-0	SPACER, CRIMPER	28
	-	2	2	2	2	2	2	1-22284-0	SPRING, COMPRESSION	27
	-	1	1	1	1	1	1	356835-1	LEVER, DRAG RELEASE	26
	-	1	1	1	1	1	1	240792-1	DRAG, TERMINAL	25
	-	1	1	1	1	1	1	1320928-1	PLATE, STRIP GUIDE	24
	-	1	1	1	1	1	1	980371-4	SCR, SKT HD SHLDR 5.0 DIA X 6.0	23
	-	1	-	1	1	-	1	690472-2	STRIPPER	22
	-	1	1	1	1	1	1	1-18023-1	SCR, SKT HD CAP M4 X 10.0	21
	-	2	2	2	2	2	2	18025-2	WASHER, SPRG LOCK, REG M4	20
	-	-	1	-	-	1	-	690472-1	STRIPPER	19
	-	1	-	-	1	-	-	1338684-2	SHEAR HOLDER, FRONT	13
1	-	1	1	1	1	1	1	3-22280-3	SPRING, COMPRESSION	12
	-	1	1	1	1	1	1	356885-5	STOP, SHEAR	11
1	-	-	1	1	-	1	1	1-1320921-0	SHEAR HOLDER, FRONT, CUT	10
1	-	1	1	1	1	1	1	318707-7	FLOATING SHEAR, FRONT	9
1	1	2	2	2	1	1	1	6-1633130-1	ANVIL, COMBINATION .070	8
	-	-	-	-	-	-	-	-	-	7
	-	-	-	-	-	-	-	-	-	6
	-	1	1	1	1	1	1	1338680-6	DEPRESSOR, SHEAR	5
	-	1	1	1	1	1	1	238011-2	BLOCK, CRIMPER SPACER	4
1	1	2	2	2	1	1	1	7-1583690-2	CRIMPER, INSUL O	3
	-	1	1	1	1	1	1	455888-6	SPACER, CRIMPER	2
1	1	2	2	2	1	1	1	3-456404-5	CRIMPER, WIRE PREMIUM	1

THIS DRAWING IS A CONTROLLED DOCUMENT.

DIMENSIONS: mm [IN]

TOLERANCES UNLESS OTHERWISE SPECIFIED: 0 PLC ±; 1 PLC ±; 2 PLC ±; 3 PLC ±; 4 PLC ±; ANGLES ±

MATERIAL - -

FINISH - -

DWN BOB HIGMAN 22MAR2011
CHK T. ELBIN 22MAR2011
APVD L.CRUZ 22MAR2011

PRODUCT SPEC -

APPLICATION SPEC See Table

WEIGHT -

TE Connectivity

NAME FINE ADJUST SIDE FEED HDI APPLICATOR -

SIZE	CAGE CODE	DRAWING NO	RESTRICTED TO
A1	00779	C-1530494	-

CUSTOMER ACCESSIBLE PRODUCTION DRAWING SCALE 3:5 SHEET 1 OF 1 REV A

4805 (3/11)

Pro/ENGINEER DRAWING