NOTES:

1. MATERIALS AND FINISHES):
   SHELL & BODY - BRASS, NICKEL PLATING
   CONTACT PIN & BARREL - BRASS, GOLD PLATED
   INSULATOR - PTFE
   GASKET - SILICONE RUBBER, COLOR RED
   RETAINER RING - STAINLESS STEEL, NATURAL
2. ELECTRICAL:
   A. IMPEDANCE: 50 OHM
3. MECHANICAL:
   A. DURABILITY: 500 CYCLES MIN.
   B. TEMPERATURE RANGE: -65° C TO +165° C
4. ASSEMBLY INSTRUCTION:
   A. ALIGN DATUM A AND SOLDER OUTER CONDUCTOR;
   B. INSTALL DISC INSULATOR AND SOLDER CONTACT;
   C. THREAD TOGETHER AND TIGHTEN WITH WRENCH.

THIRD ANGLE PROJ.

REVISIONS

REV	DESCRIPTION	DATE	ECO	APPR
A	RELEASE TO MFG.	10/7/99	43149	CPM
D	INSULATOR WAS CHANGED	30-Aug-11		SH
E	SYNC THE DRAWING WITH DANBURY	22-Feb-13	49456	SH

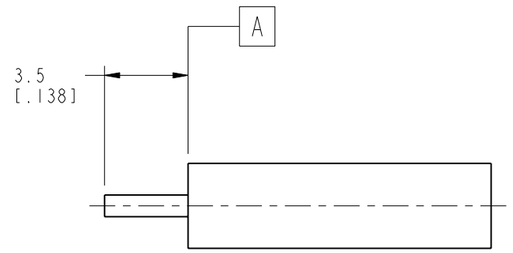

RECOMMENDED
CABLE STRIPPING DIM'S.
SCALE: 4.000

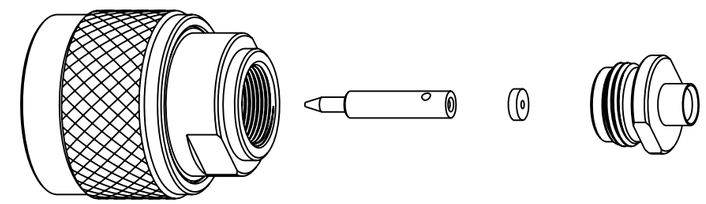

SCALE 1.500

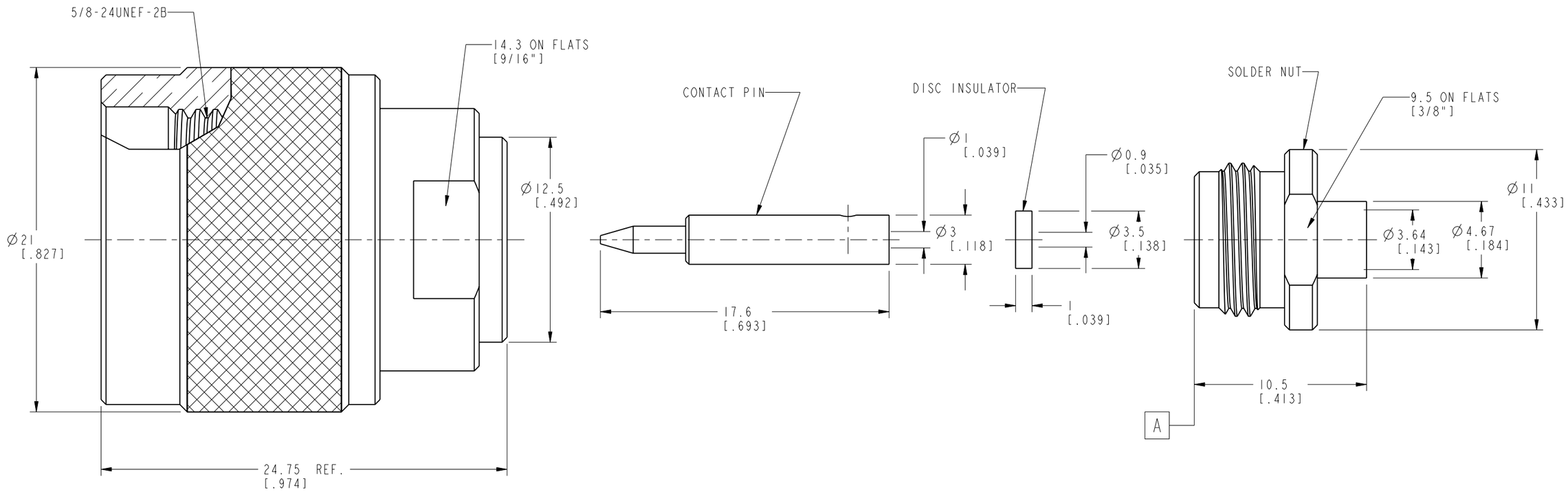

CUSTOMER OUTLINE DRAWING

ALL OTHER SHEETS ARE FOR INTERNAL USE ONLY

UNLESS OTHERWISE SPECIFIED, DIMENSIONS ARE IN METRIC AND TOLERANCES ARE:

<0.5mm	0.5 - 6mm	6 - 30mm	30 - 120mm	ANGLES
± 0.05mm	±0.1mm	±0.2mm	± 0.3mm	±1°

NOTICE - These drawings, specifications, or other data (1) are, and remain the property of Amphenol corp. (2) must be returned upon requiest; and (3) arre confidential and not to be disclosed to any person other than those to whom they are given by Amphenol Corp. the funishing of these drawings, specifications, or other data by Amphenol Corp., or to any other person to anyone for any purpose is not to be regarded by implicatioin or otherwise in any manner licensing, granting rights to permitting such holder or any other sperson to manufacture, use or sell any product, process or design, patented or otherwsie, that may in any way be related to or disclosed by said drawings, specifications, or other data.

MATERIAL

REFERENCE

CONFIGURATION LEVEL:

FINISH

DRAWN T.DENG	DATE 22-Feb-13	
ENGINEER S.LI	DATE 22-Feb-13	
APPROVED S.HSIEH	DATE 22-Feb-13	
CAD FILE		

TITLE
N DIRECT SOLDER PLUG
(FOR .141" CABLE)

SCALE: 4.0:1.0 | SHEET 2 OF 2

DWG SIZE B | REV E

Amphenol RF

www.amphenolrf.com

DRAWING NO. N1181B1-3G/NT3G-.141-50

ITEM NO. 03118IAAB42GJ5F

PART NO. 82-5955-RFX