THIS COPY IS PROVIDED ON A RESTRICTED BASIS AND IS NOT TO BE USED IN ANY WAY DETRIMENTAL TO THE INTERESTS OF PANDUIT CORP.

PANDUIT PART NUMBER	STUD SIZE	DIMENSIONS - in.					TOOLS
		A ± .03	W ± .010	C ± MIN.	M ± .03	H ±.010	
P18-6RHT6	#6	.62 (15.75)	.25 (6.35)	.21 (5.33)	.50 (12.70)	.15 (3.81)	CT-100A CT-160 CT-200 CT-260 CT-1570 CT-2500 (CT-2570CH)
P18-8RHT6	#8	.71 (18.03)	.31 (7.87)	.25 (6.35)	.55 (13.97)	.17 (4.32)	
P18-10RHT6	#10	.71 (18.03)	.31 (7.87)	.25 (6.35)	.55 (13.97)	.20 (5.08)	

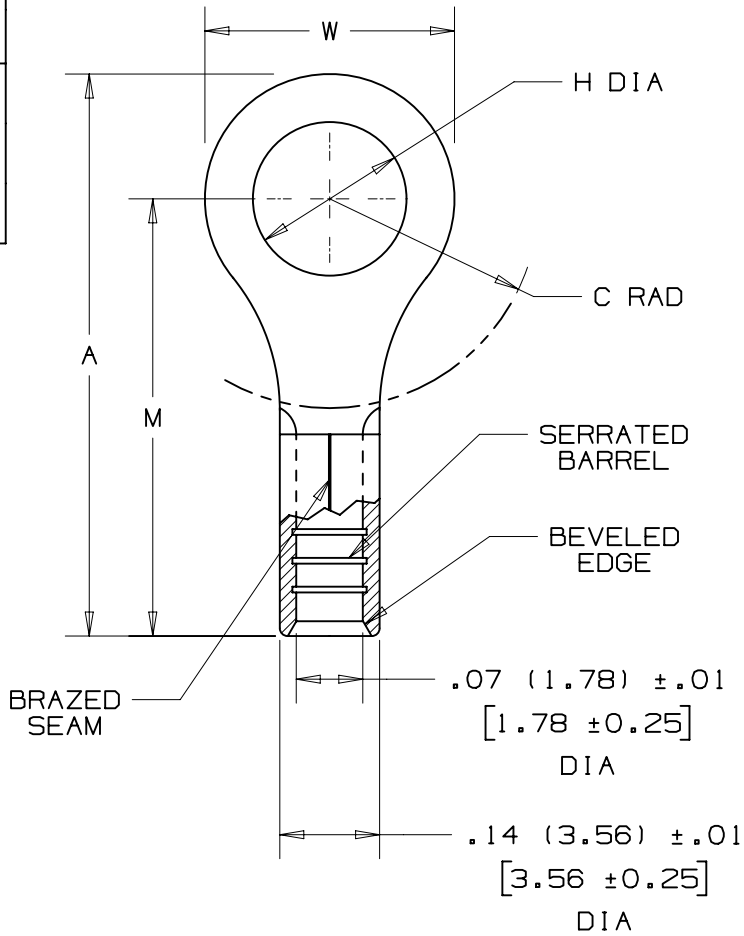

NOTES:

1. cULus LISTED FOR:
   A. #22-16 AWG SOLID OR STRANDED COPPER WIRE
   B. 650° F (343° C) MAX TEMP RATING
2. SEE WWW.PANDUIT.COM FOR PACKAGE QUANTITIES
3. MATERIAL:
   A. STAMPING - .03" (.76) THK, COPPER NICKEL PLATED
4. DIMENSIONS IN BRACKETS ARE IN MILLIMETERS
5. WIRE STRIP LENGTH: 9/32 + 1/32 (7.1 + .8) - 0 - 0

cULus LISTED 587H E52164

REV	DATE	BY	CHK	APR	DESCRIPTION	ECN
06	06/14	MBY	JHNU	RGB	ADDED cULus LOGO, REVISED NOTES, MOVED TOOLS TO TABLE, UPDATED BORDER	N41265BA-A41265

TITLE
#22-18 BARREL NON-INSULATED RING TONGUE, HIGH TEMPERATURE, 650° F

CUSTOMER DRAWING

ITEM REVISION NAME: N41265BA/06

DATASET FILE NAME: N41265BA/06

PANDUIT

UNLESS OTHERWISE SPECIFIED, DIMENSIONAL TOLERANCES ARE: IN [mm]

.X ± .XXX ±
.XX ± ANGLES ±

THIRD ANGLE PROJECTION

MATERIAL: SEE NOTE 3

DRAWING NUMBER: A41265

DRAWN BY	DATE	CHK	SCALE	SHT 1 OF 1	SIZE
DAW			NONE		A

D10100DA/16