REV.	DATE	ECR NO.	DESCRIPTION
NC	03/22/10	XXXXXX	INITIAL RELEASE
E	04/15/10	2040	CHANG BACK BODY PLATED FROM MATTE TIN TO NICKEL
F	04/26/10	2042	

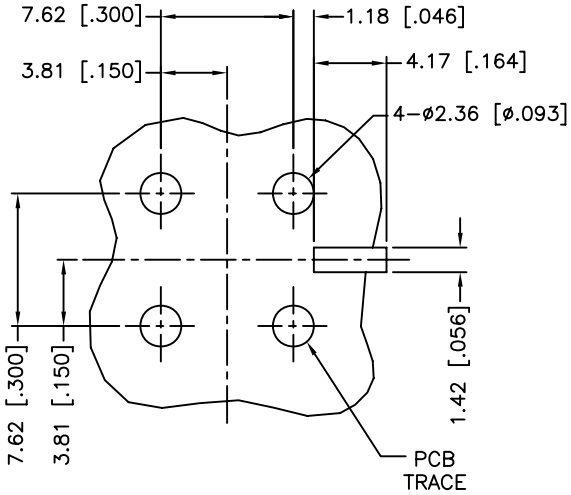

RECOMMENDED PCB FOOTPRINT

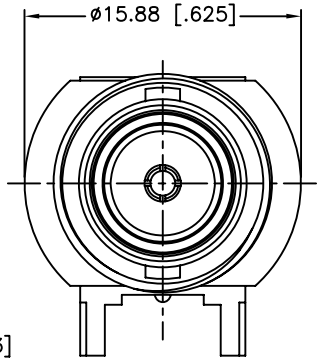

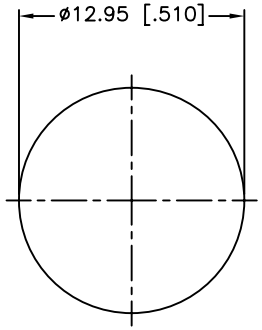

RECOMMENDED PANEL HOLE

SHOW THE SMT PAD ON THE PAD PCB LAYOUT

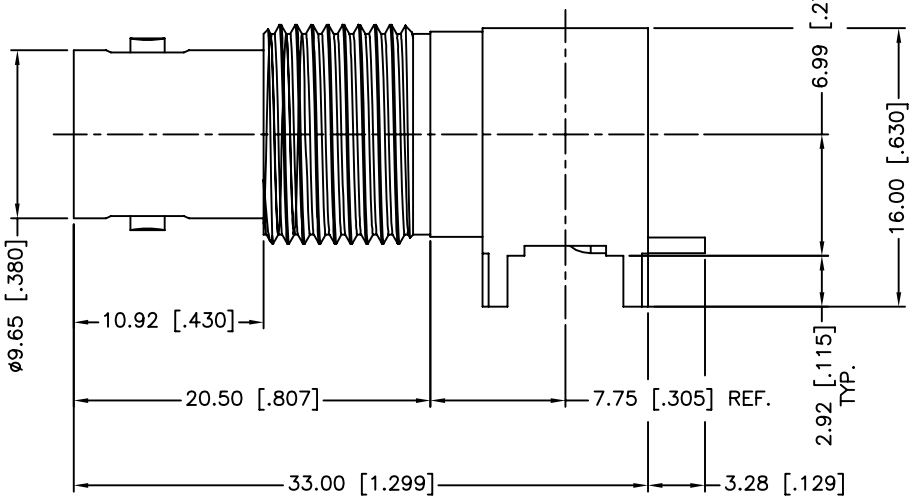

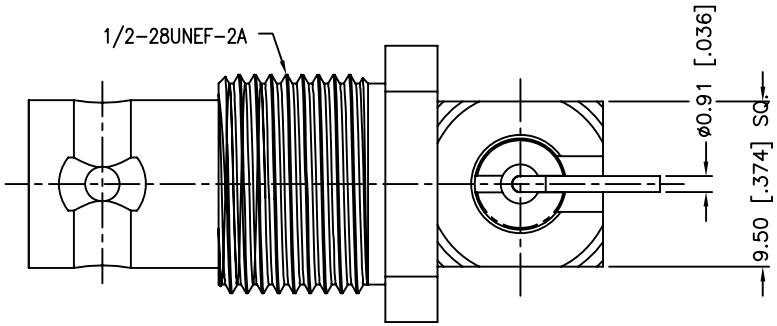

1. FREQUENCY RANGE: DC – 1 GHz
2. VSWR(RETURN LOSS): 1.12 (25dB), MAX DC – 1.5GHz
   1.22 (20dB), MAX 1.5 – 3 GHz
   VSWR PERFORMANCE DEPENDANT UPON PCB LAUNCH CONFIGURATION

	DESCRIPTION	MATERIAL	FINISH	QTY
7	INSULATOR DISC	PTFE	NATURAL	1
6	BODY–CUBE	BRASS	NICKEL	1
5	CONTACT–REAR	BRASS	GOLD	1
4	INSULATOR	PTFE	NATURAL	1
3	CONTACT PIN	BER. COPPER	GOLD	1
2	LOCK RING	BRASS	NICKEL	1
1	BODY	BRASS	NICKEL	1

UNLESS OTHERWISE SPECIFIED DIMENSIONS ARE IN MILLIMETERS. DIMENSIONS IN [ ] ARE IN INCHES AND FOR CUSTOMER REFERANCE ONLY.

UNLESS OTHERWISE SPECIFIED TOLERANCES FOR MILLIMETERS ARE:
0.5 – 8mm ± 0.20mm
8 – 30mm ± 0.40mm
30 – 120mm ± 0.50mm

UNLESS OTHERWISE SPECIFIED TOLERANCES FOR INCHES ARE:
.020 – .315 = ± 0.007"
.315 – 1.180 = ± 0.015"
1.180 – 4.724 = ± 0.020"

DO NOT SCALE DRAWING

APPROVALS		DATE
DRAWN	M.ZHANG	04/26/10
CHECKED		
ISSUED		
SHEET	1 OF 1	

CAD FILE C:/CONNEX/112800.DWG

Amphenol Connex

PART DESCRIPTION
BNC R/A PCB JACK THRU LEG,
SMT CONTACT BULKHEAD – 75 OHM

PART NO. 112800

DWG. NO. 112800.DWG | REV. F | SIZE A | SCALE NA