CKT	A	B	SLOTS LOCATION
02	4.93 / .194	2.54 ±0.05 / .100 ±.002	NONE
03	7.47 / .294	5.08 ±0.10 / .200 ±.004	NONE
04	10.01 / .394	7.62 ±0.15 / .300 ±.006	NONE
05	12.55 / .494	10.16 ±0.15 / .400 ±.006	NONE
06	15.09 / .594	12.70 ±0.18 / .500 ±.007	4, 5
07	17.63 / .694	15.24 ±0.18 / .600 ±.007	4, 5
08	20.17 / .794	17.78 ±0.20 / .700 ±.008	4, 5
09	22.71 / .894	20.32 ±0.20 / .800 ±.008	4, 5
10	25.25 / .994	22.86 ±0.23 / .900 ±.009	4, 5
11	27.79 / 1.094	25.40 ±0.23 / 1.000 ±.009	4, 5 / 8, 9
12	30.33 / 1.194	27.94 ±0.25 / 1.100 ±.010	4, 5 / 8, 9

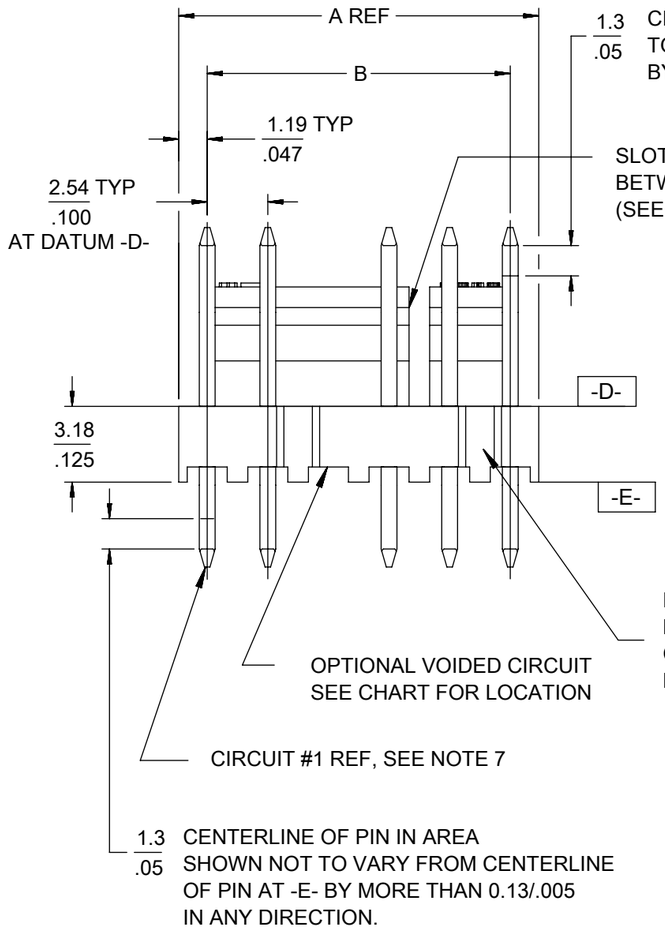

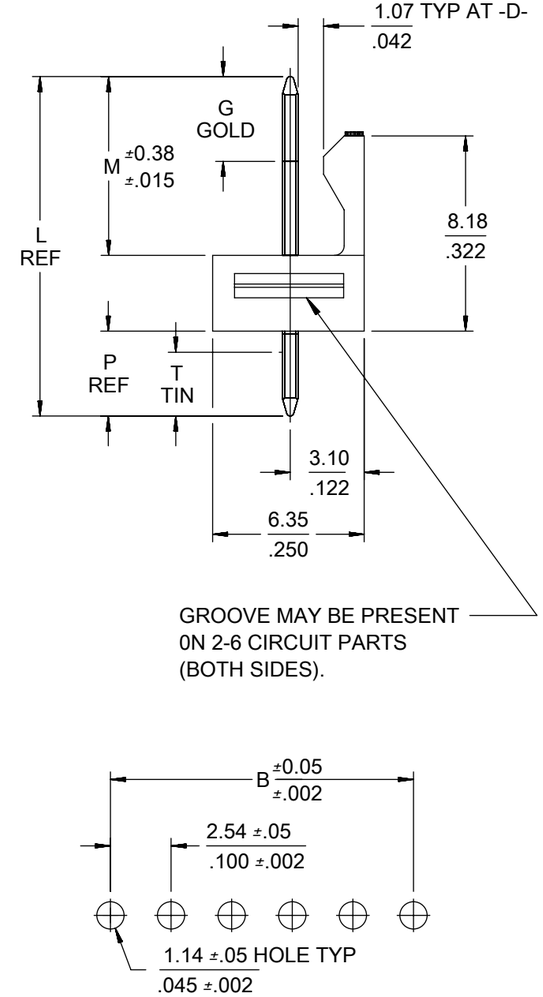

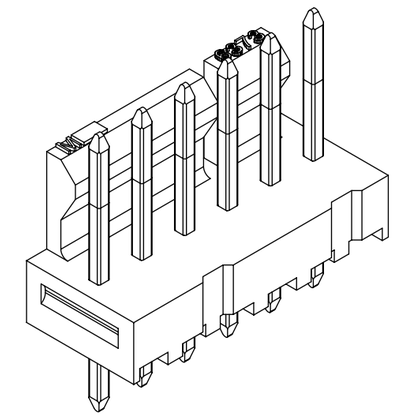

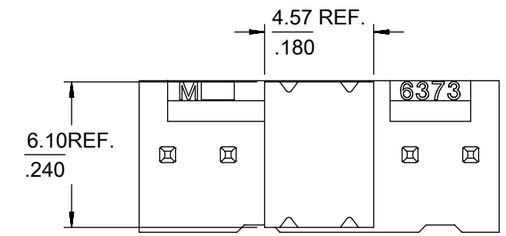

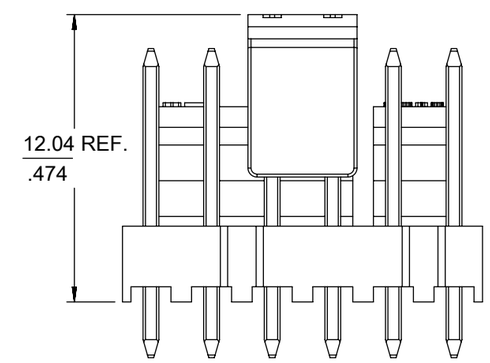

OPTIONAL PICK AND PLACE CAP FOR TAPE AND REEL PACKAGING

PCB LAYOUT: COMPONENT SIDE

NOTES:
1. MATERIAL: HOUSING: NYLON, UL 94V-1, COLOR: BLACK
   PINS: BRASS
2. FINISH:
   (197) = OVERALL REFLOWED MATTE TIN: 0.00152/.000060 MIN OVER 0.00127/.000050 MIN NICKEL.
   (208) = SELECT GOLD: 0.00038/.000015 MIN, SELECT MATTE TIN: 0.00254/.000100 MIN, BOTH OVER 0.00127/.000050 MIN NICKEL.
   (228) = SELECT GOLD: 0.00076/.000030 MIN, SELECT MATTE TIN: 0.00254/.000100 MIN, BOTH OVER 0.00127/.000050 MIN NICKEL.
3. PRODUCT SPECIFICATION AND PROCESS PARAMETERS: PS-171856-0001, PS-171856-0002
4. PACKAGING INFORMATION: SEE CHART.
5. MATES WITH: 4455, 2695, 6471 SERIES.
6. PARTS ARE STACKABLE END TO END ON 2.54/.100 CENTERS.
7. CIRCUIT ONE DESIGNATION IS USED TO DEFINE VOID LOCATION. CIRCUIT ONE MAY OR MAY NOT LINE UP WITH CIRCUIT ONE ON THE MATING HOUSING.
8. PIN PUSHOUT FORCE: 2 LBS MIN.
9. THIS PART CONFORMS TO CLASS B REQUIREMENTS OF COSMETIC SPECIFICATION PS-45499-002.

RELEASE STATUS		RELEASE DATE		MODEL: EM-6373-6

QUALITY SYMBOLS: FA = 0; FC = 0; FB = 0; ▼ = 0; C = 0; ☒ = 0; ■ = 0; C = 0

THIS DRAWING CONTAINS INFORMATION THAT IS PROPRIETARY TO MOLEX ELECTRONIC TECHNOLOGIES, LLC AND SHOULD NOT BE USED WITHOUT WRITTEN PERMISSION

EC NO: 108668	2016/09/21	ADD PART NUMBERS
DRWN: MKIPPER		
CHK'D:	2016/10/31	
APPR: FSMITH		
REV: B		

GENERAL TOLERANCES (UNLESS SPECIFIED)	MM	INCH
4 PLACES	±	±
3 PLACES	±	± 0.015
2 PLACES	± 0.25	± 0.01
1 PLACES	± 0.38	±
0 PLACES	±	±
ANGULAR TOL ±		

DRAFT WHERE APPLICABLE MUST REMAIN WITHIN DIMENSIONS

DIMENSION UNITS	SCALE
MM/IN	4:1
DRWN BY: MKIPPER	DATE: 2012/11/09
CHK'D BY: SSOUSEK	DATE: 2012/12/04
APPR BY: FSMITH	DATE: 2013/06/11
DRAWING SIZE: B	THIRD ANGLE PROJECTION

molex®

KK RPC .100 HEADER
ASSEMBLY FRICTION LOCK SOLID BODY

PRODUCT CUSTOMER DRAWING

SERIES	MATERIAL NUMBER	CUSTOMER
171856	SEE CHART	GENERAL MARKET

DOCUMENT NUMBER	DOC TYPE	DOC PART	SHEET NUMBER
SD-171856-0001	PSD	000	1 OF 1

FORMAT: Eng-lega-master-tb-prod-B
REVISION: C
DATE: 2016/04/04

GROUP:	171856-0002/-0012
PLATING:	197
PIN LENGTH: (L)	12.95 / .510
MATING: (M)	7.44 / .293
DIM. G:	N/A
PC TAIL: (P)	2.34 / .092
DIM T:	OVERALL
PACKAGING:	PK-6373-001 BULK

CKTS	MATERIAL NUMBER	CKTS	MATERIAL NUMBER	VOID CKT
2	171856-0002			
3	171856-0003			
4	171856-0004			
5	171856-0005			
6	171856-0006			
7	171856-0007			
8	171856-0008			
9	171856-0009			
10	171856-0010			
11	171856-0011			
12	171856-0012			

GROUP:	171856-1002/-1012
PLATING:	208
PIN LENGTH: (L)	12.95 / .510
MATING: (M)	7.44 / .293
DIM. G:	3.56 / .140
PC TAIL: (P)	2.34 / .092
DIM T:	3.43 / .135
PACKAGING:	PK-6373-001 BULK

CKTS	MATERIAL NUMBER	CKTS	MATERIAL NUMBER	VOID CKT
2	171856-1002			
3	171856-1003			
4	171856-1004			
5	171856-1005			
6	171856-1006			
7	171856-1007			
8	171856-1008			
9	171856-1009			
10	171856-1010			
11	171856-1011			
12	171856-1012			

GROUP:	171856-2002/-2012
PLATING:	228
PIN LENGTH: (L)	12.95 / .510
MATING: (M)	7.44 / .293
DIM. G:	3.56 / .140
PC TAIL: (P)	2.34 / .092
DIM T:	3.43 / .135
PACKAGING:	PK-6373-001 BULK

CKTS	MATERIAL NUMBER	CKTS	MATERIAL NUMBER	VOID CKT
2	171856-2002			
3	171856-2003			
4	171856-2004			
5	171856-2005			
6	171856-2006			
7	171856-2007			
8	171856-2008			
9	171856-2009			
10	171856-2010			
11	171856-2011			
12	171856-2012			

REV:	ECM INFORMATION:	TITLE:	SHEET No.
B	ECM No.: **108668** DATE: **10/31/2016**	**KK RPC 100 HEADER ASSEMBLY FRICTION LOCK SOLID BODY**	**- 2 -**

DOCUMENT NUMBER:	CREATED / REVISED BY:	CHECKED BY:	APPROVED BY:
SD - 171856 - 0001	**MKIPPER**	**JBELL**	**FSMITH**

GROUP:	171856-0102/-0112
PLATING:	197
PIN LENGTH: (L)	14.22 / .560
MATING: (M)	7.49 / .295
DIM. G:	N/A
PC TAIL: (P)	3.56 / .140
DIM T:	OVERALL
PACKAGING:	PK-6373-001 BULK

CKTS	MATERIAL NUMBER	CKTS	MATERIAL NUMBER	VOID CKT
2	171856-0102			
3	171856-0103			
4	171856-0104			
5	171856-0105			
6	171856-0106			
7	171856-0107			
8	171856-0108			
9	171856-0109			
10	171856-0110			
11	171856-0111			
12	171856-0112			

GROUP:	171856-1102/-1112
PLATING:	208
PIN LENGTH: (L)	14.22 / .560
MATING: (M)	7.49 / .295
DIM. G:	3.56 / .140
PC TAIL: (P)	3.56 / .140
DIM T:	3.43 / .135
PACKAGING:	PK-6373-001 BULK

CKTS	MATERIAL NUMBER	CKTS	MATERIAL NUMBER	VOID CKT
2	171856-1102			
3	171856-1103			
4	171856-1104			
5	171856-1105			
6	171856-1106			
7	171856-1107			
8	171856-1108			
9	171856-1109			
10	171856-1110			
11	171856-1111			
12	171856-1112			

GROUP:	
PLATING:	
PIN LENGTH: (L)	
MATING: (M)	
DIM. G:	
PC TAIL: (P)	
DIM T:	
PACKAGING:	

CKTS	MATERIAL NUMBER	CKTS	MATERIAL NUMBER	VOID CKT

REV:	ECM INFORMATION:	TITLE:	SHEET No.
B	ECM No.: **108668** DATE: **10/31/2016**	**KK RPC 100 HEADER ASSEMBLY FRICTION LOCK SOLID BODY**	**- 3 -**

DOCUMENT NUMBER:	CREATED / REVISED BY:	CHECKED BY:	APPROVED BY:
SD - 171856 - 0001	**MKIPPER**	**JBELL**	**FSMITH**

GROUP:	171856-3002/-3012
PLATING:	197
PIN LENGTH: (L)	12.95 / .510
MATING: (M)	7.44 / .293
DIM. G:	N/A
PC TAIL: (P)	2.34 / .092
DIM T:	OVERALL
PACKAGING:	PK-171856-0001 TAPE AND REEL W/CAP

CKTS	MATERIAL NUMBER	CKTS	MATERIAL NUMBER	VOID CKT
2	171856-3002			
3	171856-3003			
4	171856-3004			
5	171856-3005			
6	171856-3006			
7	171856-3007			
8	171856-3008			
9	171856-3009			
10	171856-3010			
11	171856-3011			
12	171856-3012			

GROUP:	171856-4002/-4012
PLATING:	208
PIN LENGTH: (L)	12.95 / .510
MATING: (M)	7.44 / .293
DIM. G:	3.56 / .140
PC TAIL: (P)	2.34 / .092
DIM T:	3.43 / .135
PACKAGING:	PK-171856-0001 TAPE AND REEL W/CAP

CKTS	MATERIAL NUMBER	CKTS	MATERIAL NUMBER	VOID CKT
2	171856-4002			
3	171856-4003			
4	171856-4004			
5	171856-4005			
6	171856-4006			
7	171856-4007			
8	171856-4008			
9	171856-4009			
10	171856-4010			
11	171856-4011			
12	171856-4012			

GROUP:	
PLATING:	
PIN LENGTH: (L)	
MATING: (M)	
DIM. G:	
PC TAIL: (P)	
DIM T:	
PACKAGING:	

CKTS	MATERIAL NUMBER	CKTS	MATERIAL NUMBER	VOID CKT

REV:	ECM INFORMATION:	TITLE:	SHEET No.
B	ECM No.: **108668** DATE: **10/31/2016**	**KK RPC 100 HEADER ASSEMBLY FRICTION LOCK SOLID BODY**	**- 4 -**

DOCUMENT NUMBER:	CREATED / REVISED BY:	CHECKED BY:	APPROVED BY:
SD - 171856 - 0001	**MKIPPER**	**JBELL**	**FSMITH**

GROUP:	171856-9999
PLATING:	197
PIN LENGTH: (L)	12.95 / .510
MATING: (M)	7.44 / .293
DIM. G:	N/A
PC TAIL: (P)	2.34 / .092
DIM T:	OVERALL
PACKAGING:	PK-44743-001 TUBE

CKTS	MATERIAL NUMBER	CKTS	MATERIAL NUMBER	VOID CKT
		10	171856-9999	2,3,5,6, 8,9

GROUP:	171856-9998
PLATING:	197
PIN LENGTH: (L)	12.19 / .480
MATING: (M)	7.42 / .292
DIM. G:	N/A
PC TAIL: (P)	1.60 / .063
DIM T:	OVERALL
PACKAGING:	PK-6373-001 BULK

CKTS	MATERIAL NUMBER	CKTS	MATERIAL NUMBER	VOID CKT
2	171856-9998			

GROUP:	
PLATING:	
PIN LENGTH: (L)	
MATING: (M)	
DIM. G:	
PC TAIL: (P)	
DIM T:	
PACKAGING:	

CKTS	MATERIAL NUMBER	CKTS	MATERIAL NUMBER	VOID CKT

REV:	ECM INFORMATION:	TITLE:	SHEET No.
B	ECM No.: **108668** DATE: **10/31/2016**	**KK RPC 100 HEADER ASSEMBLY FRICTION LOCK SOLID BODY**	**- 5 -**

DOCUMENT NUMBER:	CREATED / REVISED BY:	CHECKED BY:	APPROVED BY:
SD - 171856 - 0001	**MKIPPER**	**JBELL**	**FSMITH**