DWG. SIZE	DWG. NO.
D	032–7669

REVISIONS

SYM.	E.C.N.	DATE	APVD.
A	23306	1/8/97	
	REVISED SPECIFICATIONS		

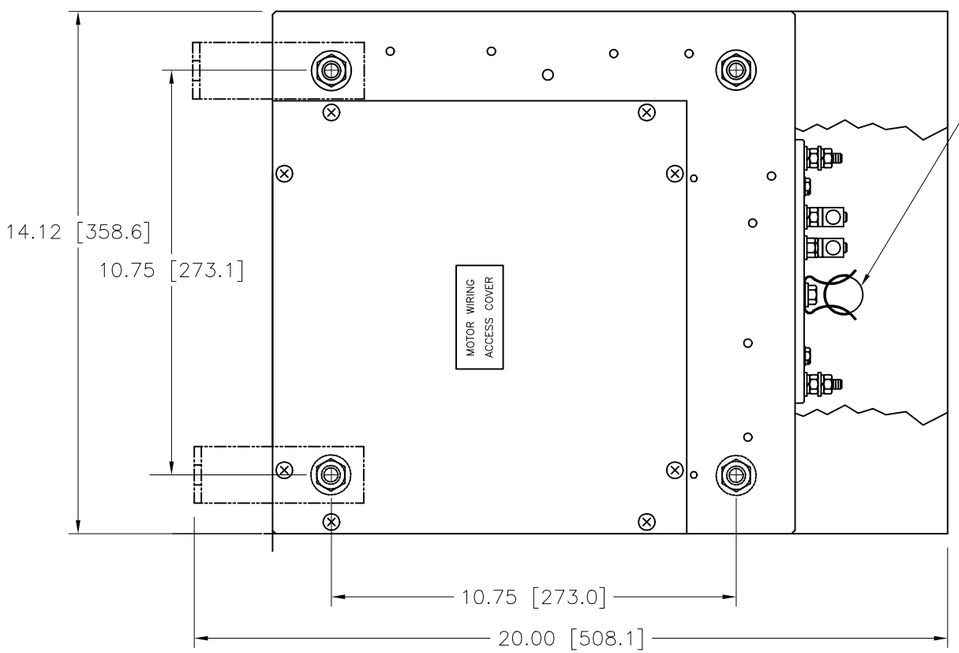

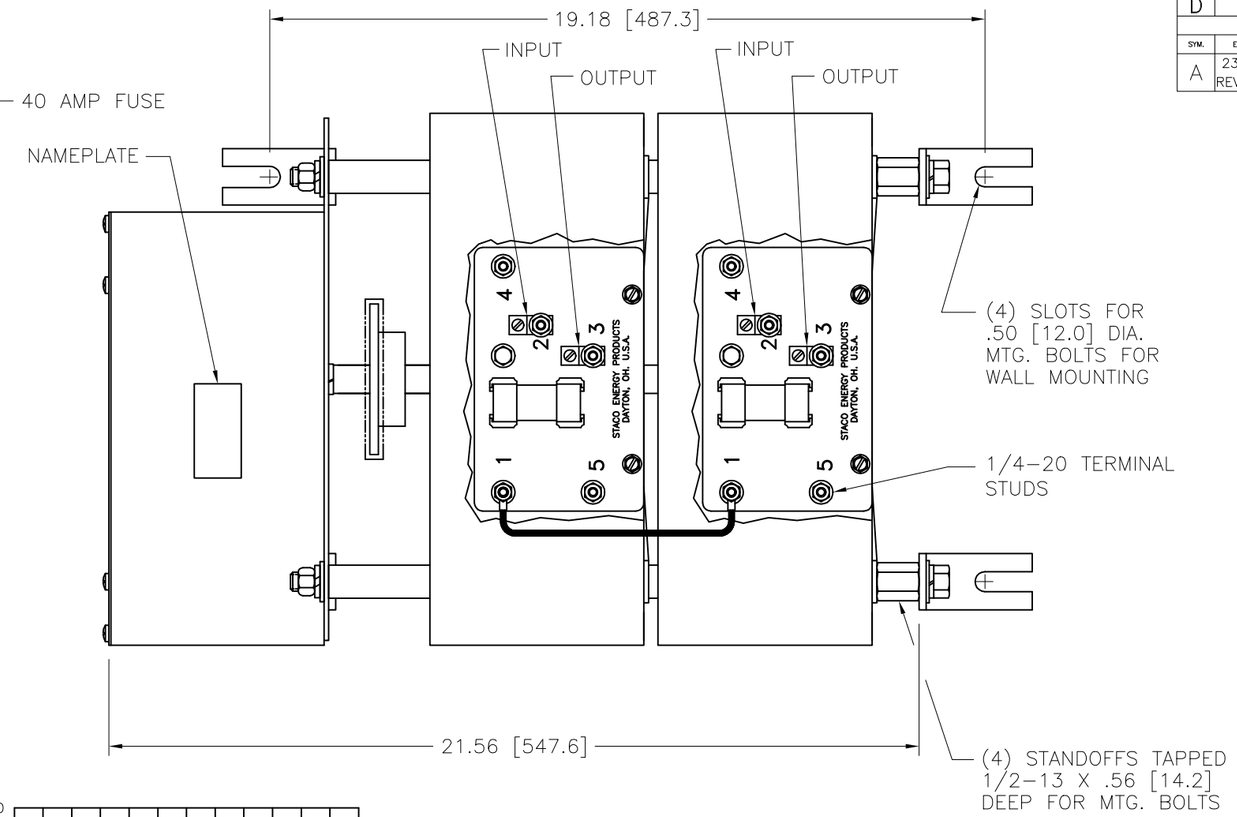

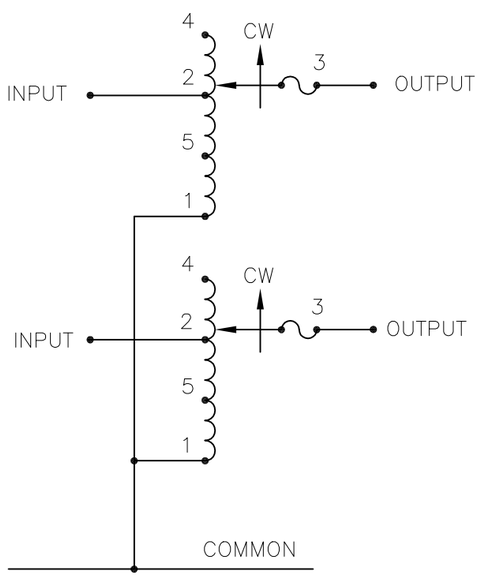

SCHEMATIC

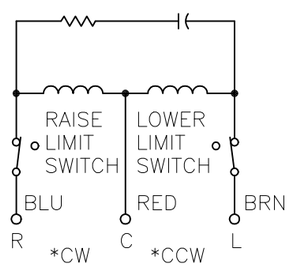

120V, 50/60 HZ.
* ROTATION AS VIEWED FROM MOTOR END
SPEED: SEE CHART

MOTOR CIRCUIT

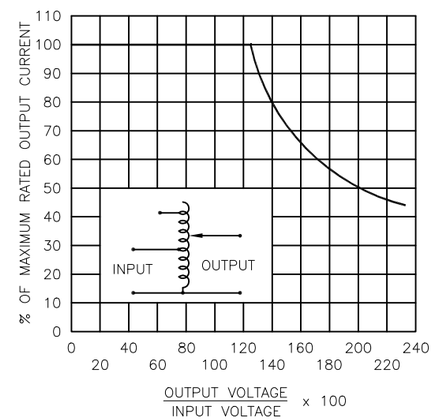

FIGURE A

MAXIMUM OUTPUT CURRENT OF ANY DUAL INPUT VOLTAGE OR VOLTAGE DOUBLER UNIT OPERATED AT LOWER INPUT VOLTAGE.

MAXIMUM OUTPUT CURRENT IN OUTPUT VOLTAGE RANGE FROM 0 TO 25 PERCENT ABOVE LINE VOLTAGE. AT HIGHER OUTPUT VOLTAGES, OUTPUT CURRENT MUST BE REDUCED ACCORDING TO RATING CURVE (SEE FIGURE A).

++ MAXIMUM KVA AT MAXIMUM OUTPUT AND CORRESSPONDING DE–RATED CURRENT. MAXIMUM KVA AT LOWER OUTPUT VOLTAGES MAY BE CALCULATED FROM RATING CURVE, (SEE FIGURE A).

V.D. = VOLTAGE DOUBLER.

SPEED (SECONDS)	TYPE NO.
5	5M6020CT–2S
15	15M6020CT–2S
30	30M6020CT–2S
60	60M6020CT–2S

SPECIFICATIONS

WIRING	INPUT		OUTPUT			SHAFT ROTATION FOR INCREASE VOLTAGE	TERMINAL CONNECTIONS FOR INCREASING VOLTAGE AS VIEWED FROM ROTOR END		
	VOLTS	HERTZ	VOLTS	MAX. AMPS	MAX. KVA		INPUT	JUMPER	OUTPUT
SINGLE PHASE SERIES	480	50/60	0–480	35	16.8	CW	4–4	———	3–3
			0–560	35	19.6	CW	2–2	———	3–3
	240	50/60	0–560	35*–15 V.D.	8.4 #	CW	5–5	———	3–3

UNLESS OTHERWISE SPECIFIED. TOLERANCE IS ±
DECIMALS .XX .010 .XXX .005 HOLES .12 .002 ANGLES 1° DRAFT 1–1/2°
MATERIAL:
UNITS IN [mm]
ALL DIMENSIONS APPLY AFTER PLATING

TITLE: SPEC. CONTROL DWG. VARIABLE TRANSFORMER TYPE: M6020CT–2S

STACO ENERGY PRODUCTS CO.
DAYTON, OHIO U.S.A.

The information and design disclosed herein was originated by and is the property of STACO ENERGY PRODUCTS CO., which reserves all patent, proprietary, design, manufacturing, reproduction, use and sale rights thereto, and to any article disclosed therein except to the extent rights are expressly granted to others. The foregoing does not apply to vendor proprietary parts.

DRAWN BY	DATE	FIRST USED ON	DO NOT SCALE DWG.	CUSTOMER APPROVAL	DATE
TIM RAU	6/12/96				
CHECKER	DATE	WEIGHT APPROX.	CODE IDENT. NO. 83008	DWG. SIZE D	DWG. NO. 032–7669
ENGINEER	DATE	SCALE .5=1	SHEET 1 OF 1		