UNCONTROLLED DOCUMENT

PART NUMBER	LCD–H401C71TR	REV.	B
DATE	E.C.N. NUMBER AND REVISION COMMENTS		REV.
02.06.07	E.C.N. #11148.		A
03.10.11	E.C.N. #10BRDR. & REDRAWN.		B

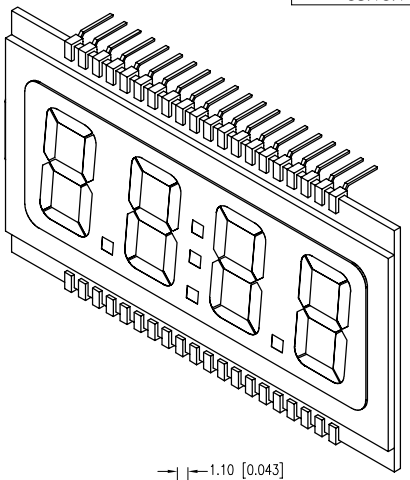

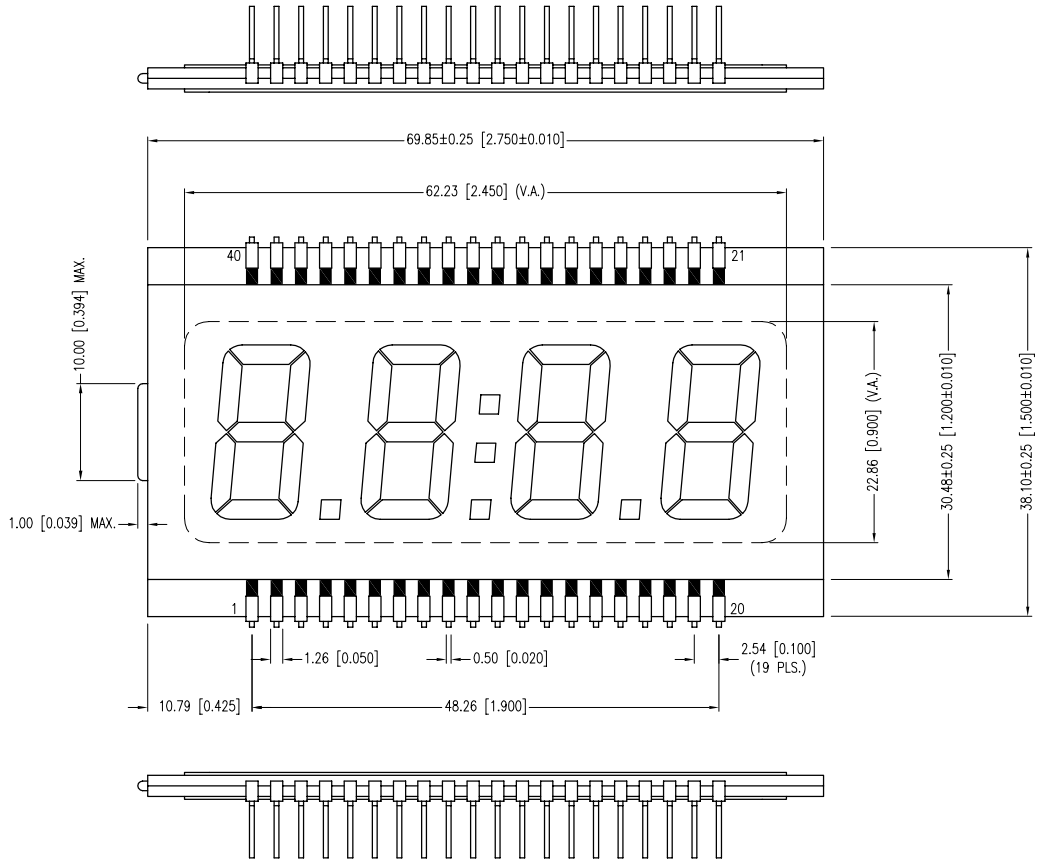

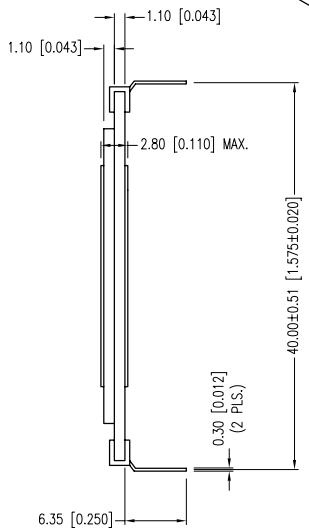

CHARACTERISTICS	
FLUID TYPE	TN
BACKGROUND COLOR	GRAY
VIEWING DIRECTION	6:00
DISPLAY MODE	REFLECTIVE
OPERATING VOLTAGE	5.0V A.C.
OPERATING TEMP.	−30°C TO +75°C
STORAGE TEMP.	−40°C TO +80°C
DRIVING METHOD	STATIC
CONNECTION TYPE	40 PINS

PIN NO.	1	2	3	4	5	6	7	8	9	10
SEGMENT	COM	/	/	/	1E	1D	1C	DP1	2E	2D
PIN NO.	11	12	13	14	15	16	17	18	19	20
SEGMENT	2C	DP2	3E	3D	3C	DP3	4E	4D	4C	4B
PIN NO.	21	22	23	24	25	26	27	28	29	30
SEGMENT	4A	4F	4G	3B	3A	3F	3G	COL	2B	2A
PIN NO.	31	32	33	34	35	36	37	38	39	40
SEGMENT	2F	2G	/	1B	1A	1F	1G	/	/	COM

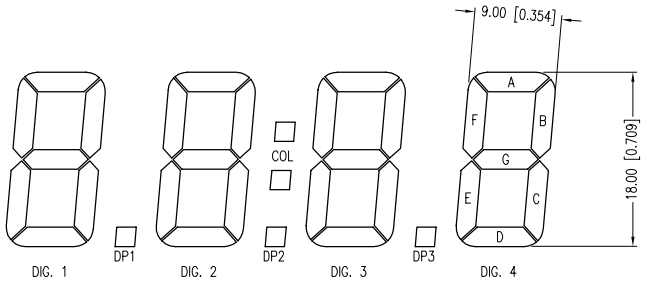

*UNLESS OTHERWISE SPECIFIED TOLERANCES PER DECIMAL PRECISION ARE: X=±1 (±0.039), X.X=±0.5 (±0.020), X.XX=±0.25 (±0.010), X.XXX=±0.127 (±0.005). LEAD SIZE=±0.05 (±0.002), LEAD LENGTH=±0.75 (±0.030). MIN= +DECIMAL PRECISION −0.00 MAX.= +0.00 −DECIMAL PRECISION

UNCONTROLLED DOCUMENT

LUMEX®
Creating LED and LCD Solutions Together™
290 E. HELEN ROAD
PALATINE, IL 60067–6976
PHONE: +1.847.359.2790
FAX: +1.847.359.6538
WEB: WWW.LUMEX.COM

0.71" CHARACTER HEIGHT, 4 DIGIT LCD GLASS, TN, 6:00 VIEW, REFLECTIVE, 40 PINS.

THE SPECIFICATIONS MAY CHANGE AT ANY TIME WITHOUT NOTICE DUE TO NEW MATERIALS OR PRODUCT IMPROVEMENT.

CONFIDENTIAL INFORMATION
THE INFORMATION CONTAINED IN THIS DOCUMENT IS THE PROPERTY OF LUMEX INC. EXCEPT AS SPECIFICALLY AUTHORIZED IN WRITING BY LUMEX INC., THE HOLDER OF THIS DOCUMENT SHALL KEEP ALL INFORMATION CONTAINED HEREIN CONFIDENTIAL AND SHALL PROTECT SAME IN WHOLE OR IN PART FROM DISCLOSURE AND DISSEMINATION TO ALL THIRD PARTIES.

DATE:	08.15.03	DRAWN BY:	JC
PAGE:	1 OF 1	CHKD BY:	––
SCALE:	NTS	APRVD BY:	––
UNIT:	mm [INCH]	Pb	