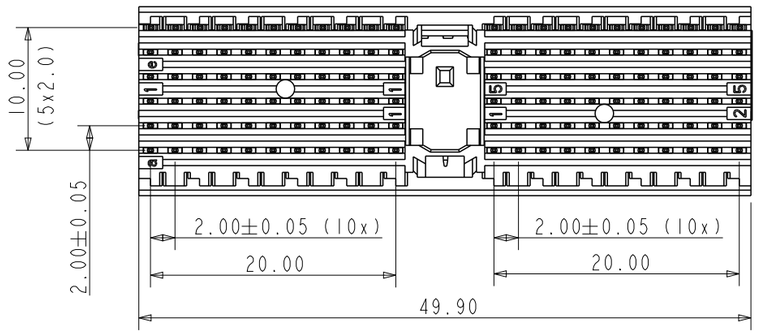

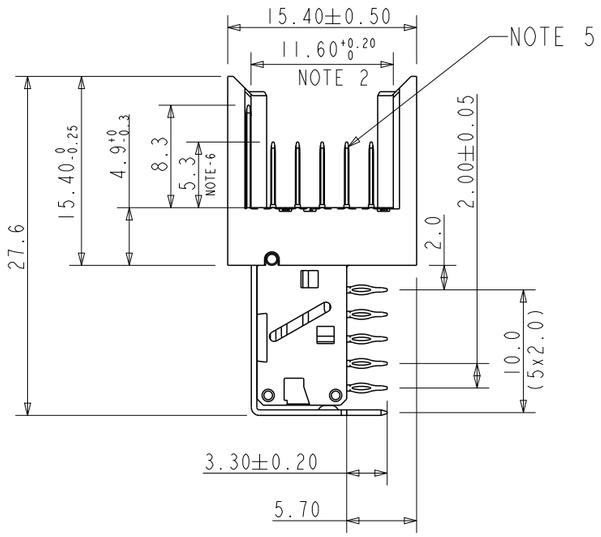

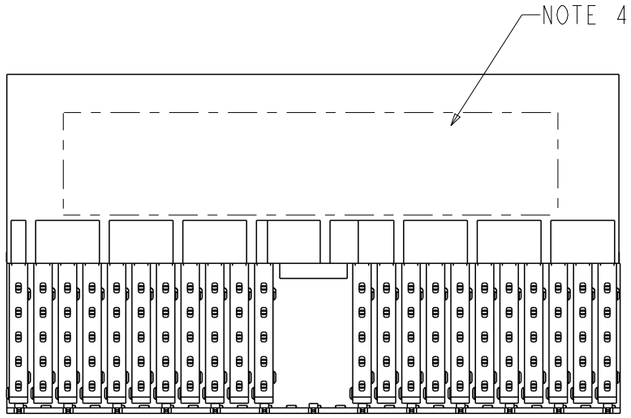

PERFORMANCE CHARACTERISTICS :

CURRENT RATING : 1.5A AT 20°C (FULLY LOADED)
1A AT 70°C (FULLY LOADED)
RATED VOLTAGE : 500V AC (CONT / CONT)
OPERATING TEMPERATURE : -55°C TO 125°C
CONTACT RESISTANCE : 25mΩ MAX.
INSERTION FORCE : 0.75 N MAX / CONT
EXTRACTION FORCE : 0.15 N MIN / CONT
INSULATION RESISTANCE : 10^4 MΩ MIN.

NOTES :

1. UL APPROVED WITH USR AND CNR.
2. MEASURED AT THE BOTTOM.
3. MATERIAL CONTACT : PHOSPHORBRONZE.
   HOUSING : LCP 30% GLASS-FILLED.
4. CONNECTOR PRINTED WITH P/N AND DATE CODES.
5. FOR ACTUAL CONTACT LOADINGS, SEE LOADING PATTERN MATING SIDE.)
6. 4 = LEVEL 1 (5.30)
   5 = LEVEL 2 (6.80)
   6 = LEVEL 3 (8.30)
7. 'HM2J07PE5128-- -'
   LEAD FREE INDICATOR : LF = LEAD FREE
   PERFORMANCE LEVEL INDICATOR (Ref DWG No BS,C ,201844,003)
8. FOR RECOMMENDED PTH DIMENSIONS REFER DRAWING : BS,A ,201572,001
9. THIS PRODUCT (LF) MEETS EUROPEAN UNION DIRECTIVES AND OTHER COUNTRY REGULATIONS AS DESCRIBED IN GS-22-008

LOADING PATTERN : MATING SIDE

F	6	6	6	6	6	6	6	6	6	6	6	X	X	X	6	6	6	6	6	6	6	6	6	6	6
E	5	5	5	5	5	5	5	5	5	5	5	X	X	X	5	5	5	5	5	5	5	5	5	5	5
D	5	5	6	5	5	5	6	5	6	5	4	X	X	X	6	5	4	5	6	5	6	5	6	5	5
C	5	6	5	6	5	5	5	5	5	5	5	X	X	X	5	5	5	5	5	6	5	6	5	5	5
B	5	5	5	5	5	5	5	5	5	5	5	X	X	X	5	5	4	5	5	5	5	5	5	5	5
A	5	5	5	5	5	5	5	5	5	5	5	X	X	X	5	5	5	5	5	5	5	5	5	5	5
Z	0	0	0	0	0	0	0	0	0	0	0	X	X	X	0	0	0	0	0	0	0	0	0	0	0
	1	2	3	4	5	6	7	8	9	10	11	12	13	14	15	16	17	18	19	20	21	22	23	24	25

PCB HOLE LAY-OUT

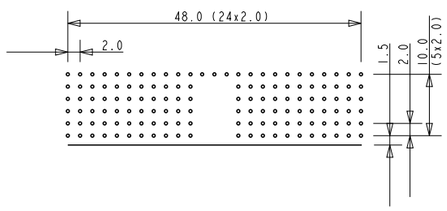

rev	ecn no	dr	date
A	CONV R0	GNY	2002-08-28
B	EC B20190	MF	2002-11-21
C	105-0108	AB	2005-06-29
D	106-0107	AB	2006-07-12
E	108-0050	AB	2008-03-31
F	110-0098	GT	2010-04-19
G	111-0044	GT	2011-02-28

www.fciconnect.com

Dr	G.Nys	2000-06-14	
Eng	M.Fret	2000-06-14	
Chr	Alex Babu	2008-03-31	
Appr	Alex Babu	2008-03-31	

surface - ISO 1302 √ | tolerance std ISO 406 ISO 1101 | projection | mm

TOLERANCES UNLESS OTHERWISE SPECIFIED

ANGULAR		LINEAR	
0°	±1°	0.X	±0.2
		0.XX	±0.1
		0.XXX	±0.05

size A3 | Scale 1/1

Product family MILLIPACS | ECN 111-0044 | Spec ref -

title: MPACS RA HDR type A, shielded

dwg no: BSC202767013 | Rev. G

catalog no HM2J07PE5128---- | CUSTOMER COPY | sheet 1 of 1

Copyright FCI.

REV F - 2006-04-17