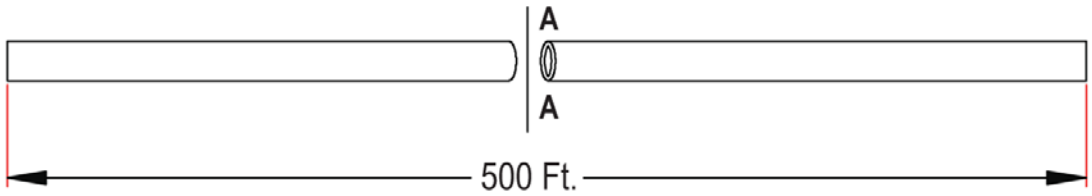

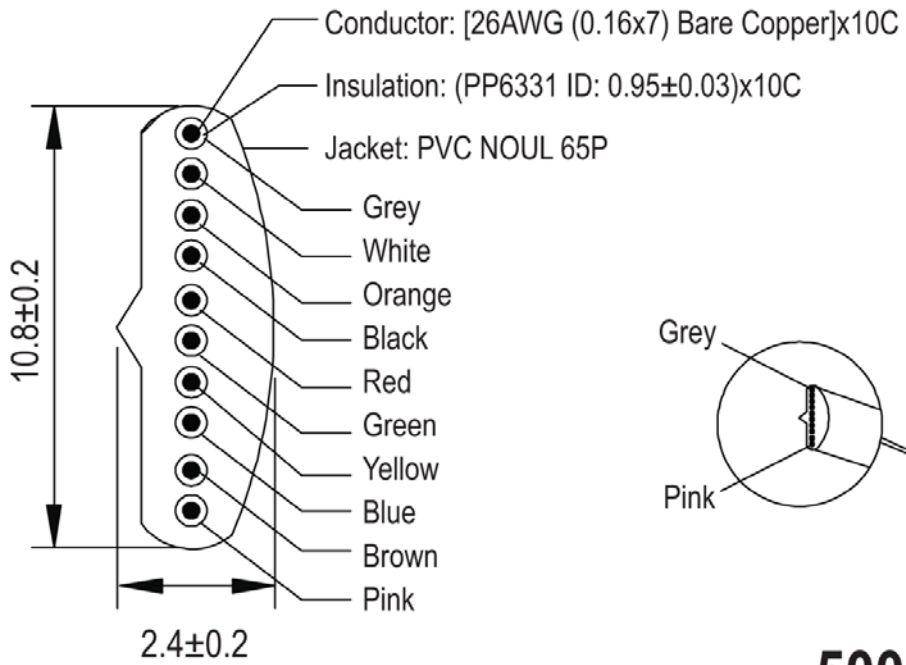

Sec: A - A

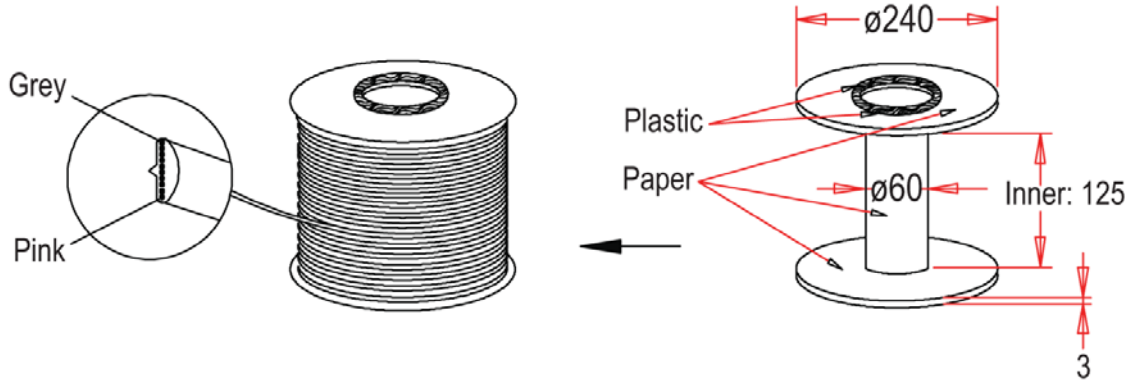

500Ft/R. "PE" Foam Wrapped

Unit: MM

Scale	1:1						Name	Item No. AT-K-26-10-B/500
TOLERANCE								
X.X	±0.40				Drawn	12.19.11	Chappell	
X.XX	±0.25				Approved			Title Modular Straight cable - Raw, 10 Contact, 26AWG, Black, 500Ft.
X.XXX	±0.15							
Angle	±3°							Drawing No. rev00
			Modification	Date	Name			Replace / Sheet

RoHS Complaint

ASSMANN WSW components