BS,C ,202175,229	B

GEN. ST.	01	02	03	04	05	06	07	08	0D	50	60	70	80	90
INT. ST.	10 11 12 13 14	18 20	31 32	33 34	38 39	40 42	43 44	45 46	48 56	70 72	73 75	76 81	82 83	84 88

REV.	DATE	DESCRIPTION	BY	C'K'D'
A	2002-03-19	B20063	MFRET	
B	2006-08-07	106-0143	VIVEK	BKP

LOADING PATTERN MATING SIDE

y	0	0	0	0	0	0	0	0	0	0	0				0	0	0	0	0	0	0	0	0	0	0
h	4	4	4	4	4	4	4	4	4	4	4	4	4	4	4	4	4	4	4	4	4	4	4	4	4
g	4	4	4	4	4	4	4	4	4	4	4	4	4	4	4	4	4	4	4	4	4	4	4	4	4
f	5	5	4	4	5	5	4	4	5	5	4	4	5	5	4	4	5	5	4	4	5	5	4	4	5
e	4	4	4	4	4	4	4	4	4	4	4	4	4	4	4	4	4	4	4	4	4	4	4	4	4
d	4	4	4	4	4	4	4	4	4	4	4	4	4	4	4	4	4	4	4	4	4	4	4	4	4
c	4	4	5	5	4	4	5	5	4	4	5	5	4	4	5	5	4	4	5	5	4	4	5	5	4
b	4	4	4	4	4	4	4	4	4	4	4	4	4	4	4	4	4	4	4	4	4	4	4	4	4
a	4	4	4	4	4	4	4	4	4	4	4	4	4	4	4	4	4	4	4	4	4	4	4	4	4
z	0	0	0	0	0	0	0	0	0	0	0				0	0	0	0	0	0	0	0	0	0	0
POS	01				05				10					15					20					25	

LOADED CONNECTOR ASSEMBLY
(FOR EXAMPLE)

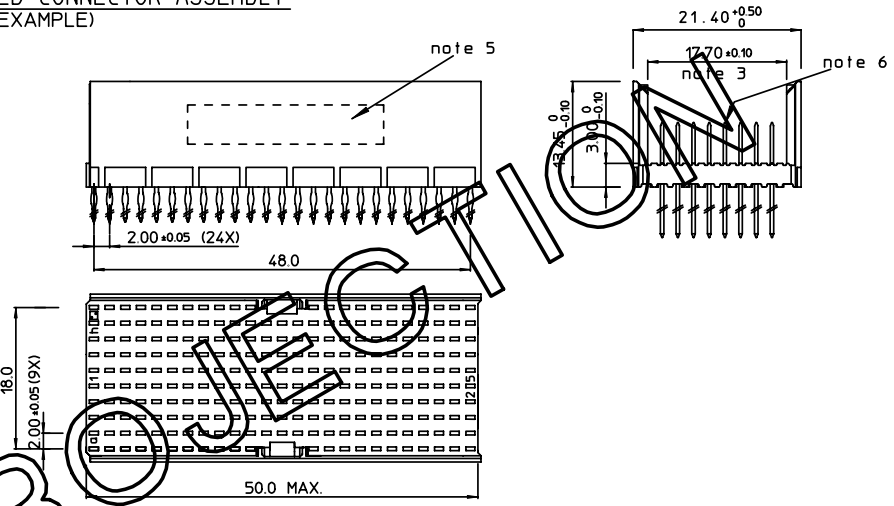

CONTACT OVERVIEW

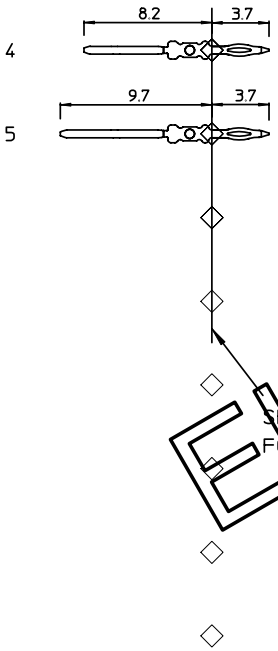

LAY-OUT P.C.B.-HOLE

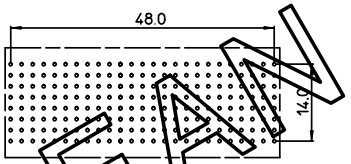

RECOMMENDED PLATED THROUGH HOLE DIMENSIONS

* DIAM.DRILLED HOLE : 0.675/0.725
* DIAM.FINISHED HOLE : 0.55/0.65
* Cu THICKNESS : 25/50µm.
* SnPb THICKNESS : 4/10µm.

PLATING TABLE

HM2P--P-------- PLATING CODE (DIGIT 13 AND 14)

CODE	CONTACT AREA		
E9	1.00 µ Au min over 1.3 µ Ni min.	SHORT / WIRE WRAP CONTACTS	PERFORMANCE LEVEL 1 (500 mating cycles)
N9	0.80 µ Au min over 1.3 µ Ni min.	SHORT / WIRE WRAP CONTACTS	PERFORMANCE LEVEL 2 (250 mating cycles)
Z1	0.40 µ Au min over 1.3 µ Ni min.	SHORT / WIRE WRAP CONTACTS	PERFORMANCE LEVEL 3 (50 mating cycles)
GL	1.00 µ Au min over 1.3 µ Ni min.	REAR PLUG-UP CONTACTS	PERFORMANCE LEVEL 1 (500 mating cycles)
GF	0.80 µ Au min over 1.3 µ Ni min.	REAR PLUG-UP CONTACTS	PERFORMANCE LEVEL 2 (250 mating cycles)
GC	0.40 µ Au min over 1.3 µ Ni min.	REAR PLUG-UP CONTACTS	PERFORMANCE LEVEL 3 (50 mating cycles)

NOTES

1. THIS PRODUCT IS CSA APPROVED.
2. THIS PRODUCT IS UL RECOGNIZED.
3. MEASURED AT THE BOTTOM.
4. MATERIAL CONTACT: PHOSPHORBRONZE
   HOUSING: CREAM WHITE GLASFILLED POLYESTER UL-94V0
5. CONNECTOR PRINTED WITH P/N AND DATE CODE.
6. FOR ACTUAL CONTACT LOADINGS, SEE LOADING PATTERN MATING SIDE.

1DEC ±0,2
2DEC ±0,1
ANGLES ±1°

WE RESERVE THE RIGHT TO CHANGE DIMENSIONS OR REQUIREMENTS WITHOUT PRIOR NOTICE.

ALL DIMENSIONS IN MM

APPR.	DATE	SIGN.
DRAFT	2002-03-19	M.Fret
CHECKED		
PROD. MGR.		
PR.ENG.MGR.		
PR.MGT.MGR.		

REFERENCES

MPACS 8R STR HDR CONN TYPE DE

CAT. No. HM2P95PDG1A0--

FCI www.fciconnect.com

SCALE

BS,C ,202175,229 — DRAWING No. — CUSTOMER DRAWING

B — REVISION

THIS IS OUR EXCLUSIVE PROPERTY. IT IS NOT TO BE COPIED, REPRINTED OR DISCLOSED TO A THIRD PARTY, NOR USED FOR MANUFACTURING WITHOUT OUR WRITTEN CONSENT, AND HAS TO BE RETURNED TO US IN CASE OF NO USAGE

DIT IS ONZE EIGENDOM EN MAG NOCH NAGEMAAKT, HERDRUKT, OVERGEMAAKT AAN DERDEN, NOCH VOOR FABRIKATIE GEBRUIKT WORDEN, ZONDER ONZE SCHRIFTELIJKE TOELATING. BIJ NIET GEBRUIK IS TERUGZENDING VERPLICHT.

EUROPEAN PRODUCTION