Series 70

Characteristics
The Series 70 consists of special short stroke pushbuttons for use with membrane keyboards. It is particularly suited for:

- PCBs

The use of single LEDs ensures that the entire control panel is very well illuminated. The module is offered in six colours and in a round or square design.

Functions
The Series 70 incorporates the following functions:

- Indicator
- Pushbutton
- Illuminated pushbutton

Market segments
The EAO Series 70 is especially suited for applications in the segments:

- Machinery and Automation
- Medicinal technology
- Laboratory and measuring equipment

Please refer to the EAO website to obtain detailed information regarding this series **www.products.eao.com**
Configure a product to your exact needs and request a quotation.

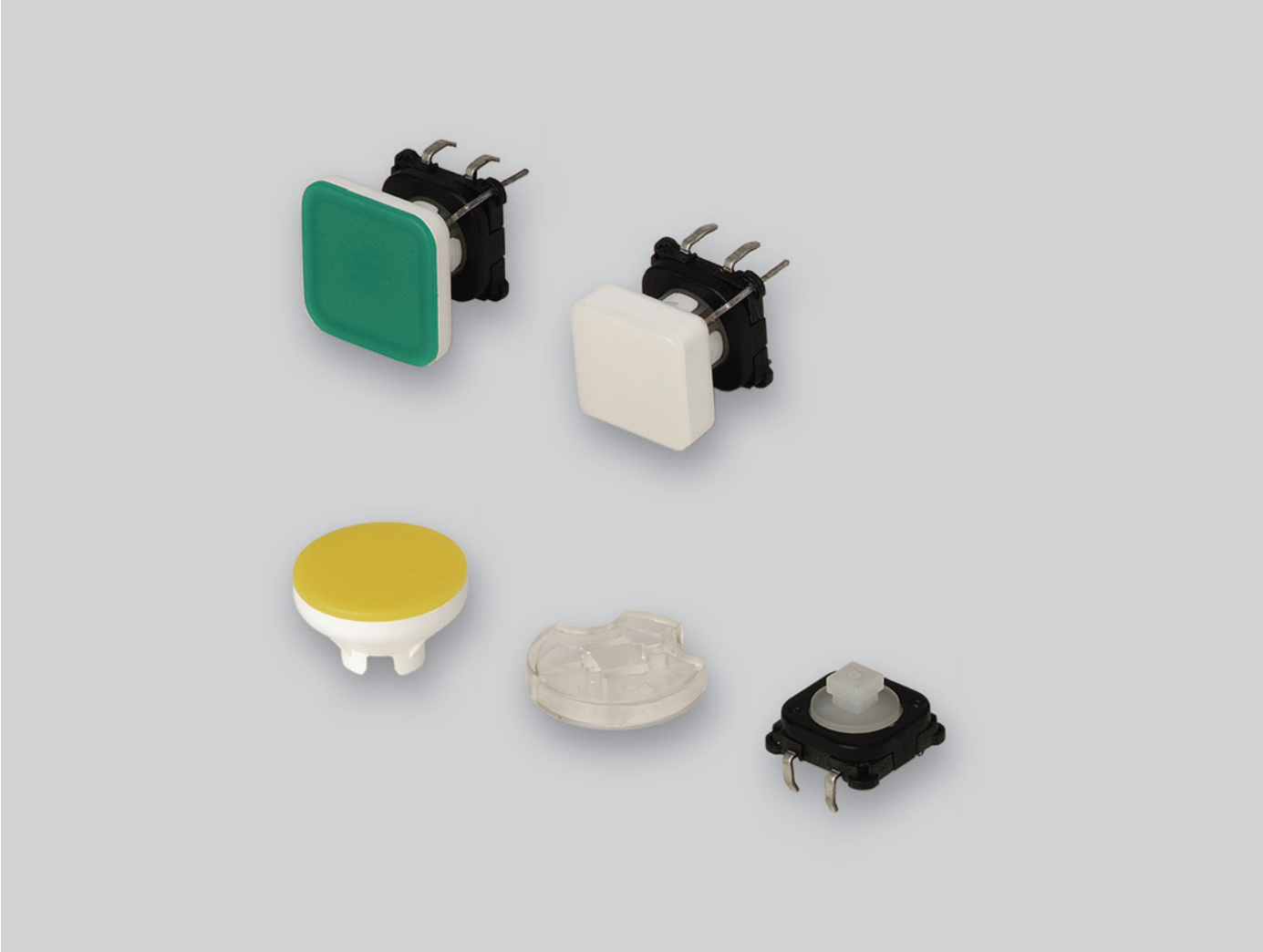

Overview

PCB pushbuttons	
Illumination element	4
Switching element without illumination	5
Switching element with illumination	6
Accessories	**7**
Drawings	**10**
Technical data	**11**
Application guidelines	**13**
Index	**15**

Illumination element

Product can differ from the current configuration.

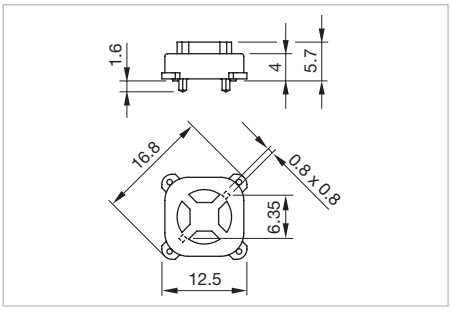

Dimensions

Equipment consisting of (schematic overview)

Lens *page 7*

LED

Illumination element

Each Part Number listed below includes all the black components shown in the 3D-drawing.

To obtain a complete unit, please select the red components from the pages shown.

Additional Information

- The customer has to decide what series resistor shall be used to the LED
- Dimensions with fitted lens see details «Lens»
- Luminosity and wave length variations caused by LED manufacturing processes may cause slight differences regarding the illumination

LED colour	Forward voltage typ.	Lumi. intensity	Dom. wavelength	Terminal	Part No.	Component layout	Wiring diagram	Weight
 **Illumination element**								
Single-LED red	2.0 VDC @ 20 mA	160 mcd	625 nm	PCB	**70-820.2S**	3	2	0.001 kg
Single-LED green	3.2 VDC @ 20 mA	650 mcd	525 nm	PCB	**70-820.5S**	3	2	0.001 kg
 **Illumination element**								
				PCB	**92-800.042**	1		0.001 kg

The component layouts you will find from page 10

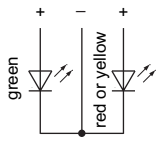

Wiring diagram 1

Wiring diagram 2

Switching element without illumination

Equipment consisting of (schematic overview)		
	*Spacing cap*	*page 8*
	**Switching element**	

Each Part Number listed below includes all the black components shown in the 3D-drawing.

To obtain a complete unit, please select the red components from the pages shown.

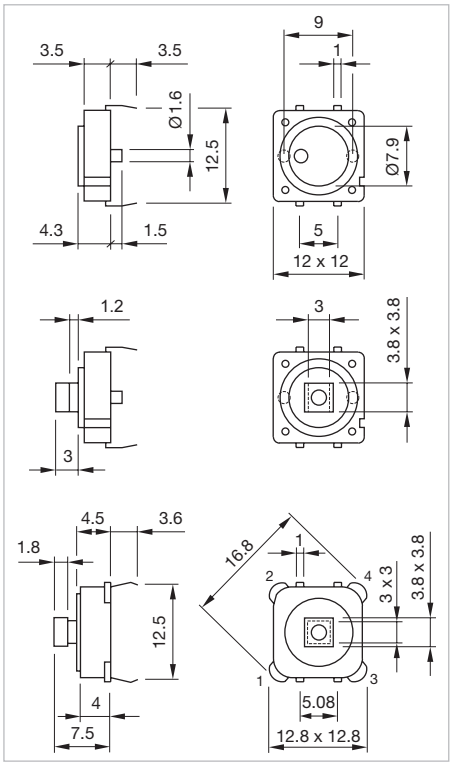

Dimensions

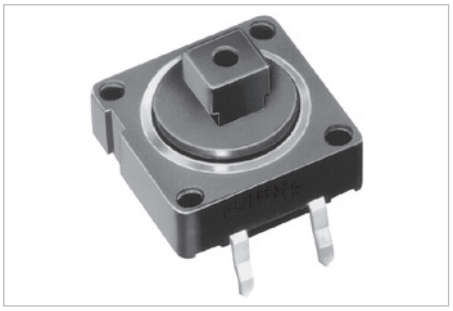

Product can differ from the current configuration.

Additional Information

- Contact normally open
- Switching action momentary
- Dimensions with fitted spacing cap see details «Spacing cap»

Product attribute	Contact material	Terminal	Part No.	Component layout	Wiring diagram	Weight
 **Switching element without illumination**						
without spacing cap	Silver	PCB	**70-100.0**	2	2	0.001 kg
 **Switching element without illumination**						
without spacing cap	Silver	PCB	**70-101.0**	2	2	0.001 kg
 **Switching element without illumination**						
without spacing cap	Gold-plated silver	PCB	**70-201.0**	1	1	0.001 kg

The component layouts you will find from page 10

Wiring diagram 1

Wiring diagram 2

Switching element with illumination

Product can differ from the current configuration.

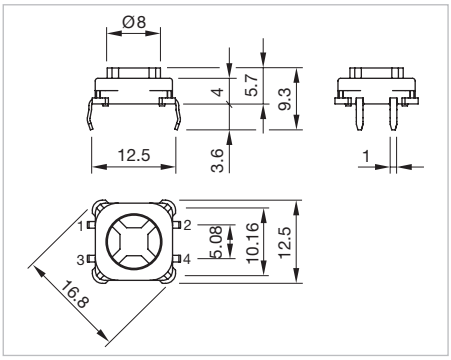

Dimensions

Equipment consisting of (schematic overview)

Lens *page 7*

LED

Switching element

Each Part Number listed below includes all the black components shown in the 3D-drawing.

To obtain a complete unit, please select the red components from the pages shown.

Additional Information

- Contact normally open
- Switching action momentary
- The customer has to decide what series resistor shall be used to the LED
- Luminosity and wave length variations caused by LED manufacturing processes may cause slight differences regarding the illumination
- Dimensions with fitted lens see details «Lens»

LED colour	Forward voltage typ.	Contact material	Lumi. intensity	Dom. wavelength	Terminal	Part No.	Component layout	Wiring diagram	Weight
 **Switching element with illumination**									
Single-LED red	2.0 VDC @ 20 mA	Gold	160 mcd	625 nm	PCB	**70-220.2S**	4	3	0.001 kg
Single-LED yellow	2.9 VDC @ 20 mA	Gold	600 mcd	580 nm	PCB	**70-220.4S**	4	3	0.001 kg
Single-LED green	3.2 VDC @ 20 mA	Gold	650 mcd	525 nm	PCB	**70-220.5S**	4	3	0.001 kg
Single-LED blue	3.0 VDC @ 20 mA	Gold	250 mcd	467 nm	PCB	**70-220.6S**	4	3	0.001 kg
Single-LED white	3.2 VDC @ 20 mA	Gold	500 mcd	x=0.3/y=0.3	PCB	**70-220.9S**	4	3	0.001 kg
 **Switching element with illumination**									
		Gold			PCB	**92-851.342**	4	1	0.001 kg

The component layouts you will find from page 10

Wiring diagram 1

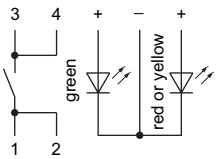

Wiring diagram 2

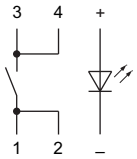

Wiring diagram 3

Front

Lens

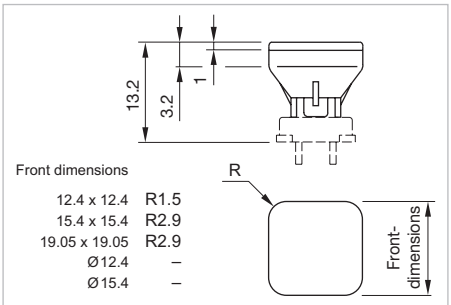

Dimensions

Lens	Part No.	Weight
 **Lens, Front dimension 19.05 x 19.05 mm**		
Plastic white translucent	**70-920.9**	0.001 kg
 **Lens, Front dimension 15.4 x 15.4 mm**		
Plastic red translucent	**70-921.2**	0.001 kg
Plastic orange translucent	**70-921.3**	0.001 kg
Plastic yellow translucent	**70-921.4**	0.001 kg
Plastic green translucent	**70-921.5**	0.001 kg
Plastic blue translucent	**70-921.6**	0.001 kg
Plastic white translucent	**70-921.9**	0.001 kg
 **Lens, Front dimension 12.4 x 12.4 mm**		
Plastic red translucent	**70-922.2**	0.001 kg
Plastic orange translucent	**70-922.3**	0.001 kg
Plastic yellow translucent	**70-922.4**	0.001 kg
Plastic green translucent	**70-922.5**	0.001 kg
Plastic blue translucent	**70-922.6**	0.001 kg
Plastic white translucent	**70-922.9**	0.001 kg
 **Lens, Front dimension Ø 15.4 mm**		
Plastic red translucent	**70-911.2**	0.001 kg
Plastic orange translucent	**70-911.3**	0.001 kg
Plastic yellow translucent	**70-911.4**	0.001 kg
Plastic green translucent	**70-911.5**	0.001 kg
Kunststoff weiss transluzent	**70-911.9**	0.001 kg

Lens	Part No.	Weight
 **Lens, Front dimension Ø 12.4 mm**		
Plastic red translucent	**70-912.2**	0.001 kg
Plastic orange translucent	**70-912.3**	0.001 kg
Plastic yellow translucent	**70-912.4**	0.001 kg
Plastic green translucent	**70-912.5**	0.001 kg
Plastic white translucent	**70-912.9**	0.001 kg

Spacing cap

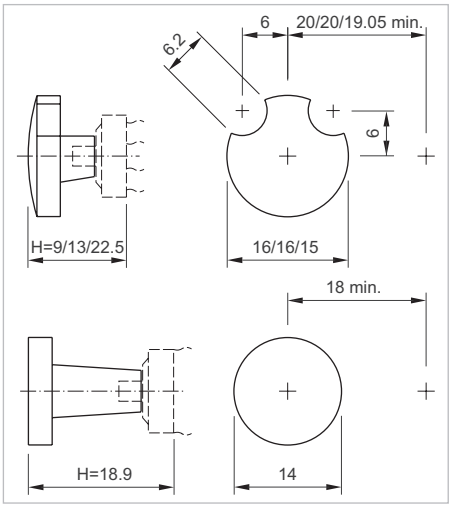

Dimensions

Product attribute	Part No.	Weight
 **Spacing cap**		
without recesses for LED, H = 18.9 mm	**70-901.0**	0.001 kg
2 recesses for LED, H = 9 mm	**70-910.0**	0.001 kg
2 recesses for LED, H = 13 mm	**70-911.0**	0.001 kg
2 recesses for LED, H = 22.5 mm	**70-912.0**	0.001 kg

Illumination

Single-LED, T1 Bi-Pin

Additional Information

- The customer has to decide what series resistor shall be used to the LED
- Luminosity and wave length variations caused by LED manufacturing processes may cause slight differences regarding the illumination

LED colour	Forward voltage typ.	Lumi. intensity	Dom. wavelength	Part No.	Weight
 **Single-LED**					
Single-LED red	2.0 VDC @ 20 mA	160 mcd	625 nm	**10-2601.3172S**	0.001 kg
Single-LED orange	2.0 VDC @ 20 mA	165 mcd	605 nm	**10-2601.3173S**	0.001 kg
Single-LED yellow	2.9 VDC @ 20 mA	600 mcd	580 nm	**10-2603.3174S**	0.001 kg
Single-LED green	3.2 VDC @ 20 mA	650 mcd	525 nm	**10-2603.3175S**	0.001 kg
Single-LED blue	3.0 VDC @ 20 mA	250 mcd	467 nm	**10-2603.3176S**	0.001 kg
Single-LED white	3.2 VDC @ 20 mA	500 mcd	x=0.3/y=0.3	**10-2603.3178S**	0.001 kg

Drawings

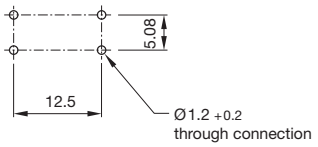

Component layout 1

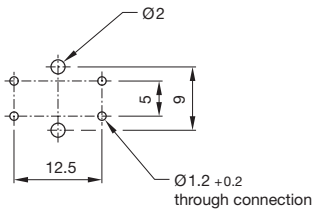

Component layout 2

Single-LED

Drilling plan (element side)

B Holes for LED
C Holes for centering pins

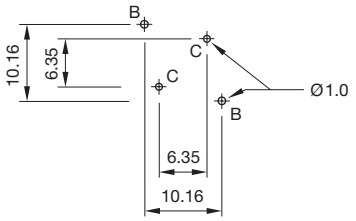

Component layout 3

Single-LED

Drilling plan (element side)

B Holes for LED
C Holes for contact pins
Pad max. Ø 2.5 mm
Through-connection recommended

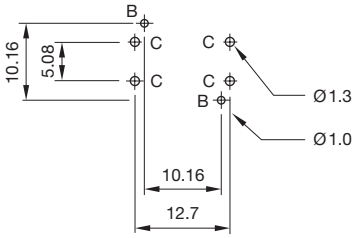

Component layout 4

Switching element illuminated Part No. 92-851.342

Switching system

Short-travel switching system with two independent contact points and tactile operation. Guarantees reliable switching even of very light loads.
1 normally open contact

Material

Material of contact
Gold-plated silver

Switching element
Thermoplastic Polyester (PET, PBT) and Polyacetale (POM)

Mechanical characteristics

Actuating force
with overlay foil 4 N ±1,5 N
Max. actuating force > 50 N, as per DIN 42115

Actuating travel
0.4 mm

Rebound time
≤ 1 ms

Resistance to heat of soldering
250 °C, 3 s (PCB assembly)
320 °C, 3 s (when using a soldering iron)

Mechanical lifetime
≥ 5 Mio. operations (switching element without overlay)
≥ 1 Mio. operations (switching element under overlay)

Electrical characteristics

Contact resistance
Starting value (initial) ≤ 100 mΩ, as per IEC 60512-2-2b

Isolation resistance
≥ 1000 MΩ

Contact resistance
≤ 100 mΩ
as per 500 000 cycles of operation at 12 VDC, 5 mA resistive load ≤ 200 mΩ

Electrical life
≥ 500 000 operations at 42 VDC, 50 mA, as per IEC 60512-5-9c
When attention is paid to the direction of current flow from terminal 3/4 to 1/2 the electrical life can be prolonged.

Switch rating

Switching voltage VDC/VAC	min. 50 mV	max. 42 V
Switching current VDC/VAC	min. 10 µA	max. 100 mA
Power rating	max. 2 W	

Electric strength
500 VAC, 50 Hz, 1 min, as per IEC 60512-2-4a

Environmental conditions

Storage temperature
-40 °C … +85 °C

Operating temperature
-25 °C … +70 °C

Approvals

Declaration ot conformity
CE

Switching element non-illuminated Part No. 70-100.0 and 70-101.0

Switching system

Short-travel switching system with two independent contact points and tactile operation. Guarantees reliable switching even of very light loads.
1 normally open contact

Material

Material of contact
Silver (Ag)

Mechanical characteristics

Actuating force
with overlay foil 5 N ±2 N
Max. actuating force >50 N, as per DIN 42115

Actuating travel
0.3 mm

Rebound time
≤ 5ms

Mechanical lifetime
> 1 Mio. operations with overlay

Electrical characteristics

Isolation resistance
≥ 50 MΩ

Contact resistance
≤ 100 mΩ
as per 500 000 cycles of operation at 12 VDC, 5 mA resistive load ≤ 200 mΩ

70 Technical data

Electrical life
at 5 VDC, 1 mA > 1 million operations
at 24 VDC, 1 mA > 100 000 operations

Switch rating
≤ 1 watt (resistive load)

Switch rating
≤ 24 VDC, ≤ 50 mA

Electric strength
250 VAC for 1min.

Environmental conditions

Storage temperature
-30 °C … +85 °C

Operating temperature
-20 °C … +70 °C

Approvals

Declaration ot conformity
CE

Switching element non-illuminated Part No. 70-201.0

Switching system

Short-travel switching system with two independent contact points and tactile operation. Guarantees reliable switching even of very light loads.
1 normally open contact

Material

Material of contact
Gold-plated silver

Switching element
Thermoplastic Polyester (PET, PBT) and Polyacetale (POM)

Mechanical characteristics

Actuating force
with overlay foil 2.1 N ±0.2 N
Max. actuating force > 50 N, as per DIN 42115

Actuating travel
max. 0.5 mm

Rebound time
≤ 1 ms

Resistance to heat of soldering
260 °C, 3 s, as per IEC 60068-2-20

Mechanical lifetime
≥ 5 Mio. operations (switching element without overlay)
≥ 1 Mio. operations (switching element under overlay)

Front protection
front with overlay foil IP 65

Electrical characteristics

Contact resistance
Starting value (initial) ≤ 100 mΩ, as per IEC 60512-2-2b

Isolation resistance
≥ 1000 MΩ

Contact resistance
≤ 100 mΩ
as per 500 000 cycles of operation at 12 VDC, 5 mA resistive load ≤ 200 mΩ

Electrical life
≥ 500 000 operations at 42 VDC, 50 mA, as per IEC 60512-5-9c
When attention is paid to the direction of current flow from terminal ¾ to ½ the electrical life can be prolonged.

Switch rating

Switching voltage VDC/VAC	min. 50 mV	max. 42 V
Switching current VDC/VAC	min.10 mA	max.100 mA
Switch rating	max. 2 W	

Electric strength
500 VAC, 50 Hz, 1 min, as per IEC 60512-2-4a

Environmental conditions

Storage temperature
-40 °C … +85 °C

Operating temperature
-25 °C … +70 °C

Approvals

Declaration ot conformity
CE

EAO reserves the right to alter specifications without further notice.

Suppressor circuits

When switching inductive loads such as relays, DC motors, and DC solenoids, it is always important to absorb surges (e.g. with a diode) to protect the contacts. When these inductive loads are switched off, a counter emf can severely damage switch contacts and greatly shorten lifetime.

Fig. 1 shows an inductive load with a free-wheeling diode connected in parallel. This free-wheeling diode provides a path for the inductor current to flow when the current is interrupted by the switch. Without this free-wheeling diode, the voltage across the coil will be limited only by dielectric breakdown voltages of the circuit or parasitic elements of the coil. This voltage can be kilovolts in amplitude even when nominal circuit voltages are low (e.g. 12 VDC) see Fig. 2.

The free-wheeling diode should be chosen so that the reverse breakdown voltage is greater than the voltage driving the inductive load. The DC blocking voltage (VR) of the free-wheeling diode can be found in the datasheet of a diode. The forward current should be equal or greater than the maximum current flowing through the load.

To get an efficient protection, the free-wheeling diode must be connected as close as possible to the inductive load!

Switching with inductive load
Fig. 1

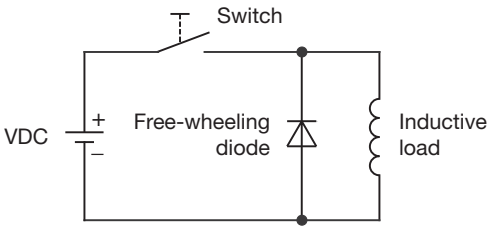

Counter EMF
over load without free-wheeling diode
Fig. 2

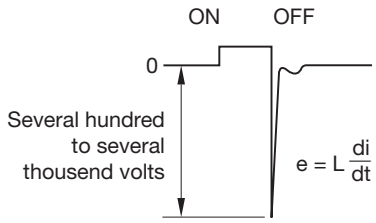

Note for soldering

Process parameter for wave soldering
Basic specification for wave soldering J-STD 75 W4C

Maximum temperature on the component side of the pcb (Temperature must not exceed during the entire processing)	120 °C
Preheating phase (t1 … t2) Ramp up	70 … 120 sec typ. + 1°C/sec
Ramp up to maximum temperature (t2 … t3)	not defined
Maximum temperature on the soldering side (Temp 3) Maximum time of soldering process (t3 … t4)	250 °C 3 sec
Ramp down at 170 °C:	typ. –2 °C/sec

Temperature curve wave soldering

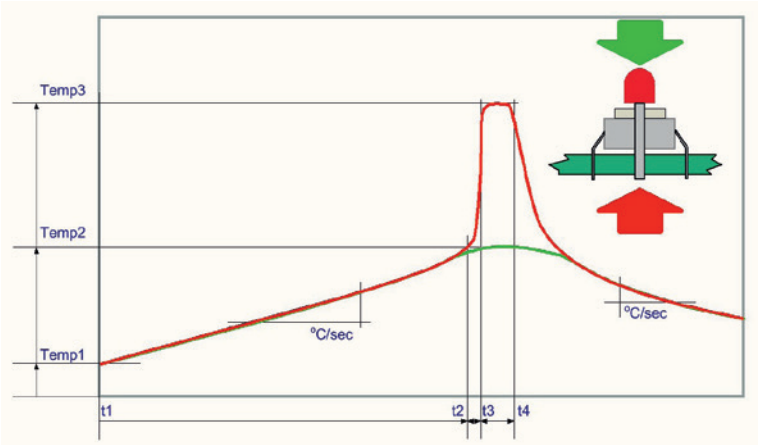

Green curve:	Temperature on the component side of the pcb	
Red curve:	Temperature on the soldering side of the pcb	
Room temperature:	Temp 1	
Preheating:	Temperature process =	Temp 1 … Temp 2
	Process time =	t1 … t2
Ramp up to soldering temperature:	Process time =	t2 … t3
Soldering phase:	Temperature process =	Temp 3
	Process time =	t3 … t4

Iron soldering
Basic specification for iron soldering IEC 60068-2-20

Maximum temperature at tip of iron:	320 °C
Maximum soldering time:	3 sec

Cleaning/Lacquering
The switching elements are not sealed. Cleaning up the PCB may damage the contacts in the switching elements. For this reason, the following points should be noted:
- When soldering make sure that the flux does not pass on the upper side of the PCB.
- When cleaning the PCB with detergents ensure that no dust or other debris may get inside of the switching elements.
- Ensure that no lacquer penetrates into the interior of the switching element when lacquering the PCB.

Storage of components
To obtain the optimum solderability of the components, the following points should be noted during storage:
- Do not store components in locations with high temperature or humidity.
- Do not expose components to corrosive gases.
- Avoid direct sunlight for a long period.

Index from Part No.

Part No.	Page
10-2601.3172S	9
10-2601.3173S	9
10-2603.3174S	9
10-2603.3175S	9
10-2603.3176S	9
10-2603.3178S	9
70-100.0	5
70-101.0	5
70-201.0	5
70-220.2S	6
70-220.4S	6
70-220.5S	6
70-220.6S	6
70-220.9S	6
70-820.2S	4
70-820.5S	4
70-901.0	8
70-910.0	8
70-911.0	8
70-911.2	7
70-911.3	7
70-911.4	7
70-911.5	7
70-911.9	7
70-912.0	8
70-912.2	8
70-912.3	8
70-912.4	8
70-912.5	8
70-912.9	8
70-920.9	7
70-921.2	7
70-921.3	7
70-921.4	7
70-921.5	7
70-921.6	7
70-921.9	7
70-922.2	7
70-922.3	7
70-922.4	7
70-922.5	7
70-922.6	7
70-922.9	7
92-800.042	4
92-851.342	6