SHEET OF

NOTES:
1. ALL DIMENSION IN MM [INCH]
2. GENERAL TOLERANCE: X.X=±0.4
   X.XX=±0.25
3. TERM. NOS. FOR REF. ONLY
4. CONTACT RATING SWITCHING: 150mA, 250V AC/DC
   350mA, 110V AC/DC
5. OPERATING FORCE: 425±100 CM/STANDARD
6. OPERATING TEMP: −30° to 85°C
▲ 7. CIRCUIT 3P: 4 POSITIONS, 30° INDEX.
8. DIELECTRIC STRENGTH: 1000V RMS min.@Sea Level
▲ 9. DESIGNATE MAJOR DIMENSIONS
▲ 10. HARDWARE SUPPLIED ON SWITCH− SEE BELOW
   LOCKRING, LOCKWASHER, & HEX NUT.

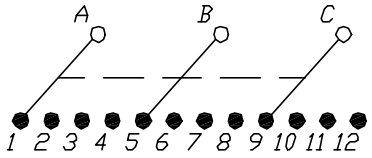

CONTACT CONFIGURATION
Timing: (BBM) Non−Shorting

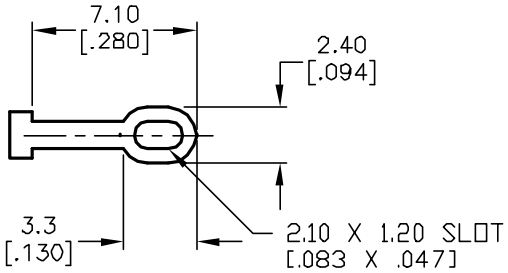

TERMINATION DETAIL
SCALE 2X

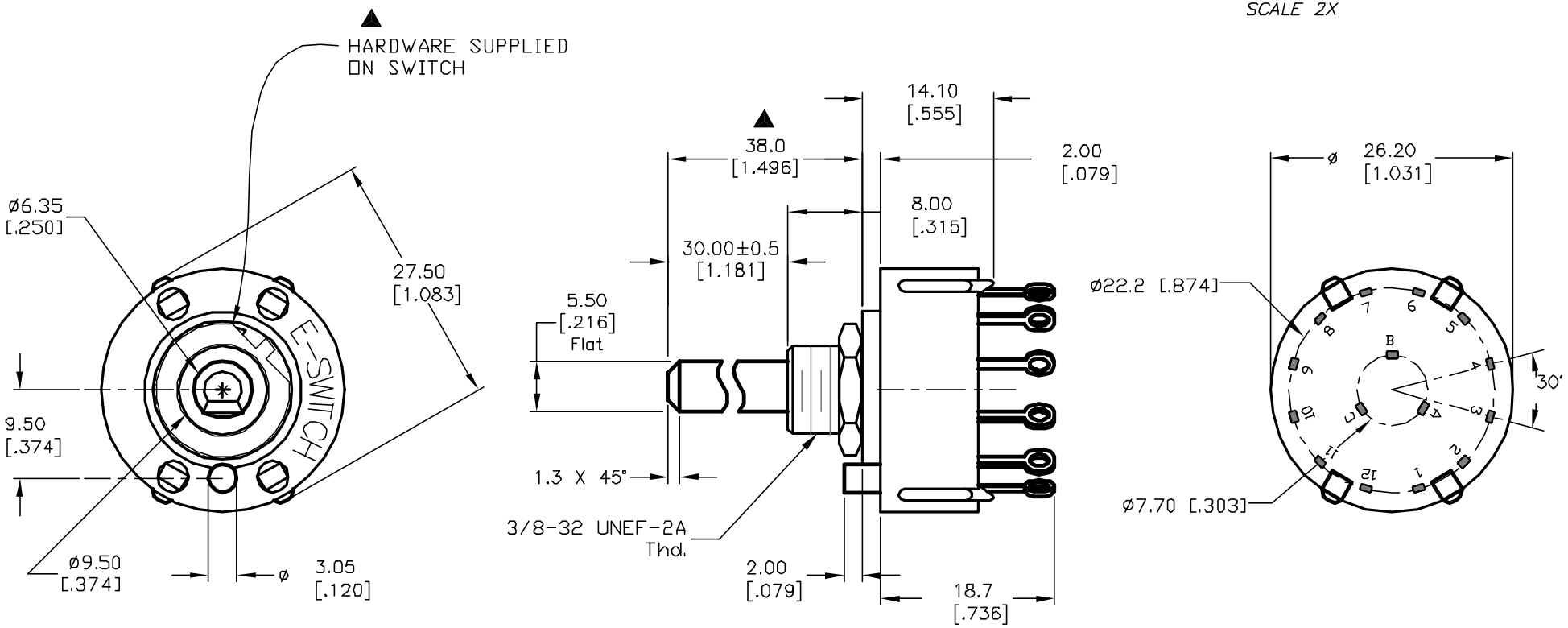

REV.	ECN No.	DESCRIPTION	DATE	CHKD
D	12821	REVISED NOTE 10	2/18/03	CJB
C	12394	REV DESC. PER NEW CATALOG	9/16/02	CJB
B	11281	REVISED ACTUATOR	10/5/01	CJB

THE INFORMATION CONTAINED IN THIS DOCUMENT IS PROPRIETARY TO E-SWITCH AND IS NOT TO BE COPIED OR TRANSFERRED

E-SWITCH®

TITLE: KC-34-A-(30.0mm) 01-N-L-S

SCALE	DATE	DR	DWG	REV
1.5:1	3/7/01	CJB	G510260	D