No. of Positions	DIMENSIONS A	DIMENSIONS B
10	8.00	10.40
12	10.00	12.40
14	12.00	14.40
16	14.00	16.40
18	16.00	18.40
20	18.00	20.40
22	20.00	22.40
24	22.00	24.40
26	24.00	26.40
28	26.00	28.40
30	28.00	30.40
32	30.00	32.40
34	32.00	34.40
36	34.00	36.40
38	36.00	38.40
40	38.00	40.40
42	40.00	42.40
44	42.00	44.40
46	44.00	46.40
48	46.00	48.40
50	48.00	50.40
52	50.00	52.40
54	52.00	54.40
56	54.00	56.40
58	56.00	58.40
60	58.00	60.40
62	60.00	62.40
64	62.00	64.40
66	64.00	66.40
68	66.00	68.40
70	68.00	70.40
72	70.00	72.40
74	72.00	74.40
76	74.00	76.40
78	76.00	78.40
80	78.00	80.40

NOTE: Number of contacts (pins) is not the same as the number of positions. For this dual row connector, each position has 2 contacts (pins).

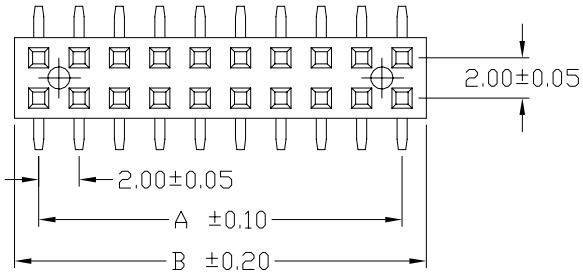

SPECIFICATIONS

Current Rating:	1 Amp
Insulator resistance:	5000 Megohms min.
Contact resistance:	20 m ohms max.
Dielectric withstanding:	AC 500 V
Operating Temperature:	−40°~+105°C
Max Processing Temp:	230° for 30 seconds (260° C for 10 seconds.)
Contact Material:	Phosphor Bronze.
Insulator Material:	High Temperature Thermoplastic,UL 94V−0

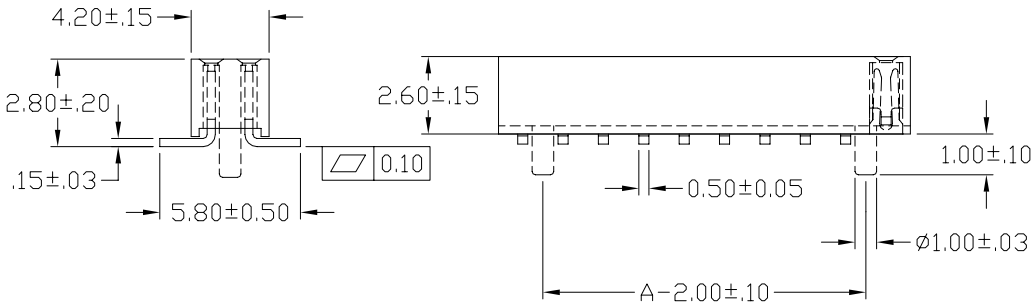

Recommended P.C.Board SMD Layout

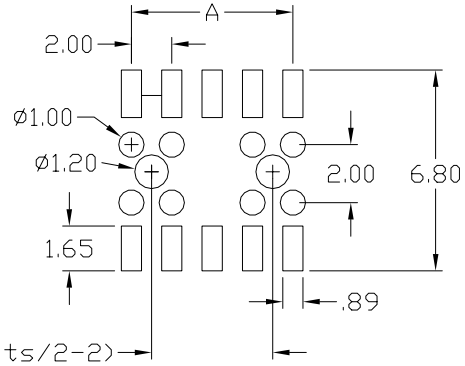

replace "xx" with number of positions (not total pins) to complete P/N

For Plating Options, the 3rd letter of the part number denotes plating:
P = Gold Flash Overall
W = Selective Gold Flash
X = 30u" Selective Gold
S = 10u" Overall Gold
Z = 10u" Selective Gold

Sullins Electronics San Marcos, CA www.SullinsElectronics.com	GENERAL TOLERANCE XX. ± X. ± 0.20 .X ± 0.10 .XX ± 0.05 XXX. ± .XXX ± X.° ± .X° ±	SCALE NTS UNIT MM SIZE	DRAWN JWHITE CHECK AJT APPROVE	DATE 11/4/03 DATE 11/4/03 DATE 11/4/03	DWG. NO. T0024 PARTS NO. PPPNxx2GFNS (w/o location peg) PPPNxx2GFNP (with location peg)	REV. B SHEET 1/1	