THIS COPY IS PROVIDED ON A RESTRICTED BASIS AND IS NOT TO BE USED IN ANY WAY DETRIMENTAL TO THE INTERESTS OF PANDUIT CORP.

PANDUIT PART NUMBER	STUD SIZE	DIMENSIONS - in [mm]				
		A ± .03 [0,8]	W ± .01 [0,3]	C ± .02 [0,5]	M ± .03 [0,8]	H ± .01 [0,3]
P6-8R	#8	1.21 [30,7]	.47 [11,9]	.43 [10,9]	.97 [24,6]	.17 [4,3]
P6-10R	#10	1.21 [30,7]	.47 [11,9]	.43 [10,9]	.97 [24,6]	.20 [5,1]
P6-14R	1/4"	1.21 [30,7]	.47 [11,9]	.43 [10,9]	.97 [24,6]	.27 [6.9]
P6-56R	5/16"	1.33 [33,8]	.62 [15,8]	.51 [13,0]	1.02 [25,9]	.33 [8,4]
P6-38R	3/8"	1.33 [33,8]	.62 [15,8]	.51 [13,0]	1.02 [25,9]	.39 [9,9]
P6-12R	1/2"	1.43 [36,3]	.82 [20,8]	.51 [13,0]	1.02 [25,9]	.52 [13,2]

UL & CSA TOOLS (DIES)
CT-1701 (P6) CT-2600 (CD-2600-P6)

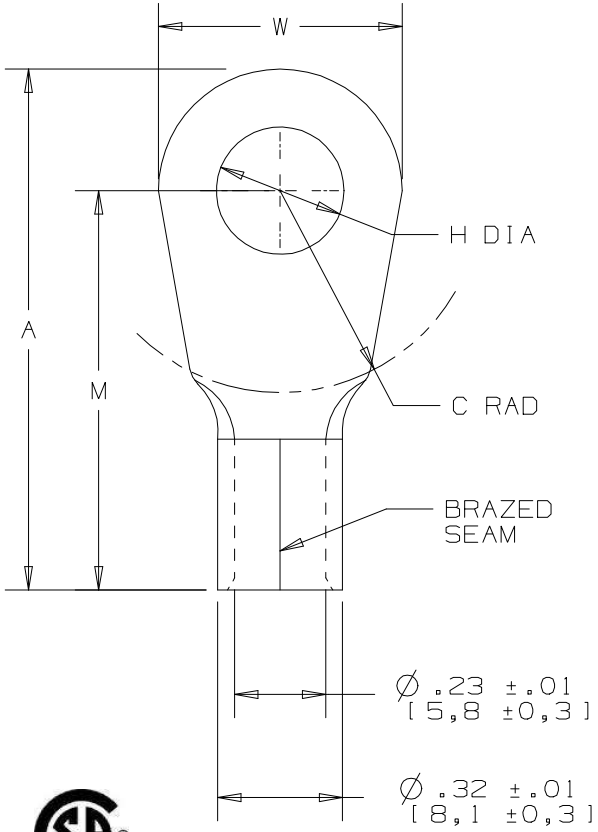

NOTES:

1. UL LISTED AND CSA CERTIFIED FOR:
   A. 302°F (150°C) MAX TEMP RATING
   B. #6 AWG STRANDED COPPER WIRE
2. SEE WWW.PANDUIT.COM FOR PACKAGE QUANTITIES
3. MATERIAL:
   A. STAMPING - .045" [1,14] THK COPPER, TIN PLATED
4. DIMENSIONS IN BRACKETS ARE IN MILLIMETERS
5. WIRE STRIP LENGTH: 7/16" $^{+1/32}_{-0}$ [11,1mm $^{+0,8}_{-0}$]

c UL us
LISTED
587H
E52164

CSA
CERTIFIED
LR31212

REV	DATE	BY	CHK	APR	DESCRIPTION	ECN
08	07/15	TMR	TMR	RGB	ADDED CT-2600 TO PKG LABEL, ADDED CSA BACK TO DWG, DIE INFO	N41214BB-A41214
07	07/14	MBY	JHNU	RGB	REVISED NOTES, MOVED TOOLS TO TABLE, REVISED CERTIFICATION, UPDATED BORDER	**N41214BB-A41214**

D10100DA/16

TITLE
#6 BARREL NON-INSULATED RING TONGUE

CUSTOMER DRAWING

ITEM REVISION NAME: N41214BB/08

DATASET FILE NAME: N41214BB/08

PANDUIT

UNLESS OTHERWISE SPECIFIED, DIMENSIONAL TOLERANCES ARE: IN [mm]

.X ± .XXX ±
.XX ± ANGLES ±

THIRD ANGLE PROJECTION

MATERIAL: SEE NOTES

DRAWING NUMBER: A41214

DRAWN BY	DATE	CHK	SCALE		SIZE
DAW			NONE	SHT 1 OF 1	A