Compact fans for AC, DC and EC

Version 2016-01

ebmpapst

The engineer's choice

GREEN TECH

Trendsetter in fan technology

Uncompromising quality made by ebm-papst

Among the best.
Trendsetting with innovative technologies. Listening to customers' needs. Developing new ideas to meet requirements and realizing them with pioneering spirit. This philosophy has made ebm-papst the leading technology pioneer in the world of fans.

A brand in that decades of application expertise gained from large-volume fan production and because we are in a position to produce highly efficient quality products. Our intelligent solutions for electronics cooling make sure that you are always one step ahead of the competition thanks to innovative, reliable, top-quality technology. Of course they are readily available at fair market prices.
And if required, tailor-made right down to the last detail. In other words, if you need fans that do not yet actually exist, contact us.

Insist on ebm-papst.

Table of contents

ebm-papst company profile

The entire world of ventilation and drive engineering. This is the world of ebm-papst. More than 12,000 people – in Germany and throughout the world – develop, produce and sell our motors and fans. Our global presence and unique range of products, based on a quality standard that surpasses all others, have made us the world market leader in motors and fans. Our daily work is determined by a keen awareness of our customer's needs and constant striving to arrive at the perfect application solution for a wide variety of different industries.
Those who know us know the high standards we apply to our work and know our creed: to be as close to our customers as possible and to simply be the best in terms of innovation and reliability.

Our history – Our drive

Rooted in ebm, PAPST and mvl, the three leading innovators in the development and production of motors and fans, ebm-papst has established itself as the world market leader. Now as ever, our legendary inventive spirit shines through in products that set standards in many industries worldwide. We are proud to say that, despite difficult competition, our performance has always been exemplary and outstanding in business, in our personal relationship with our customers, and of course with respect to technology and engineering. For decades, we have contributed to the world of air technology and drive engineering with both small revolutions and large milestones. To maintain this advantage in skills and knowledge to reach maximum quality and thus the highest degree of customer satisfaction, our employees around the world put their passion and dedication to work for you.

Passionately involved in R&D

Our catalogs only show you the results of our constant work in R&D: products of highest quality and reliability. After all, it is our passion to constantly try something new and improve what we have. We take advantage of the latest development methods and state-of-the-art technology, and invest heavily in R&D facilities. Best of all, though, we rely on excellently trained and skilled engineers and technicians to be at your service in R&D and Sales & Distribution.

Producing and safeguarding high-quality products and services

This is our promise without any compromise. Whether produced in one of our six factories in Germany or one of our eleven international production sites, our products always have the same high level of quality. This quality control is something you can definitely rely on throughout all the stages of the process, from customer service, development, and material selection, to the best certified suppliers, parts production, and final delivery. Furthermore, our products have to pass the most rigorous tests under all realistic operating conditions: continuous stress test, salt spray test, vibration test, or precision noise measuring, just to mention a few. And the product gets clearance for serial production only after all the desired characteristics have been determined to be just right. Environmental care is another priority with ebm-papst. This is why we have developed our product line in EC technology, which makes for very low power consumption. Our manufacturing philosophy is focused completely on environmental care in production, recycling, waste, and wastewater disposal.

Global Domestic

In order to be the world specialist for customized solutions, you need strong partners. Global Domestic – being present all over the world and being a national company in each individual country – is how we have established ourselves in all important markets on this globe with our successful subsidiaries. And so you will always find ebm-papst close to home, speaking your language, and knowing the demands of your markets. Besides, our worldwide production alliance serves as a basis for competitive pricing. Our global services and logistic services ensure short response times, IT networking, and just-in-time delivery.

All our efforts are documented in a comprehensive quality management system, both for products and services. Being certified as complying with the tough requirements of the international standards DIN EN ISO 9001, ISO/TS 16949-2 and of standard DIN EN ISO 14001 is just one seal of approval we have received for our constant efforts to provide only the best quality products and services.

Sustainability is at the core of our thinking and action. As a matter of principle!

Environmental compatibility and sustainability have always been at the core of our thinking and action. Which is why we have been dedicated for decades to the simple but firm principle of one of our company founders, Gerhard Sturm: "Every new product we develop must be economically and ecologically superior to its predecessor." We use the name GreenTech to express our company philosophy.

GreenTech is proactive development.
Even in the design phase, the materials and processes we use are optimized for the greatest possible environmental sustainability, energy balance, and wherever possible, recyclability. We continually improve the material and performance of our products, as well as the flow and noise characteristics. At the same time, we reduce energy consumption significantly. Close cooperation with universities and scientific institutes and a professorship we sponsor in the field of power engineering and regenerative energies allow us to profit from the latest research findings in these disciplines while preparing highly qualified young academics for the future at the same time.

GreenTech is eco-friendly production.
GreenTech also stands for maximum energy efficiency in our production processes. Here, the intelligent use of industrial waste heat and groundwater cooling, photovoltaics, and of course, our own cooling and ventilation technology, play a very important role. For example, our most modern plant consumes 91% less energy than currently specified and required. This way our products contribute to protecting the the environment, from their origin to their recyclable packaging.

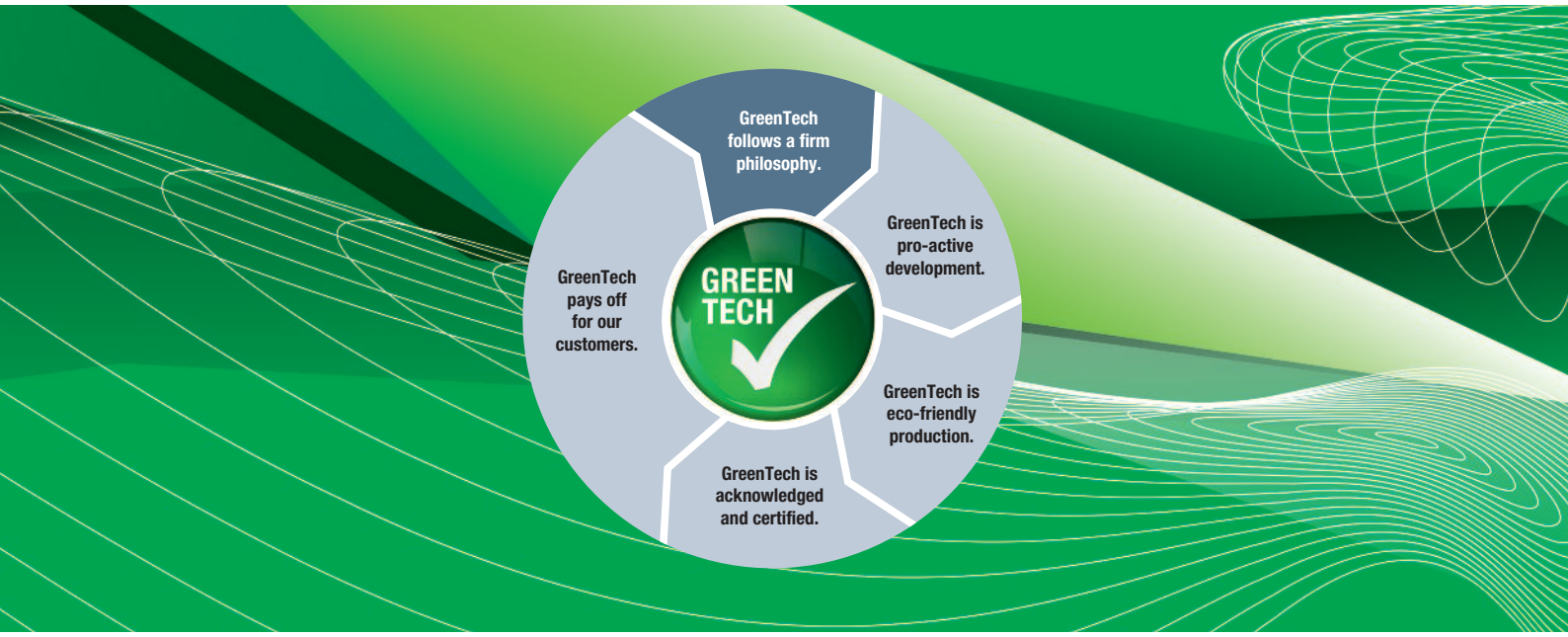

ebmpapst

GreenTech is acknowledged and certified.
Our entire production chain can stand up to critical scrutiny by environmental specialists and the public.
This supports our position as Germany's most sustainable company 2013, as does the DEKRA Award 2012 we received in the category "Umwelt Herausforderung Energiewende" (Environment Challenge: Transition to more sustainable energy systems), to name only a few of a large number of examples. The environmental advantage gained in the performance of the products developed from our GreenTech philosophy can also be measured in our compliance with the most stringent energy and environmental standards. In many instances, our products are already well below the thresholds energy legislation will impose a few years from now.

GreenTech is a good investment for our customers.
Innovative EC technology from ebm-papst is at the heart of GreenTech. As the core element of our most efficient motors and fans, this technology allows efficiencies of up to 90%, saves energy at a very high level, extends the service life significantly, and makes our products maintenance-free. Not only do these values benefit the environment, but every cent also pays off for the user! All ebm-papst products, even those with applications that are not (yet) ready for GreenTech EC technology, have an attractive link between economy and ecology that holds great promise for the future.

Expertise and technology

Drive know-how

For the past 60 years, all conceivable types and applications of drive engineering have played an essential role at ebm-papst. A commitment that is the foundation for the development of optimum drive solutions regardless of the type of fan and its use. DC and EC fans are generally equipped with electronically commutated external rotor motors. In order to save as much space as possible, commutation electronic components are integrated in the hub of the fan. Our AC fans are driven mainly by shaded-pole or capacitor motors based on the external rotor principle. In the 3900 and 9900 range of particularly slim fans, internal rotor motors are used.

Smooth operation

Our aerodynamically optimized design and high mechanical precision produces outstanding noise properties in series production. The "soft" commutation electronics of DC and EC fans produce a very smooth operation. By avoiding steep switching edges when the individual coils are switched, this reduces the structure-borne noise from the motor. Computer-aided measurements and series of analyses performed in a state-of-the-art sound measuring chamber are conducted on each fan model from the very beginning.

Long service life

The bearing system plays a vital role both in the long service life and the smooth operation of device fans. The Sintec compact bearing provides most of the device fans with a proven bearing system. Constant low noise during the entire operating time and considerably lower shock sensitivity are the outstanding features of this bearing technology. In addition, with regard to temperature endurance, Sintec compact bearings can be used without problems in most applications.

Despite the slightly greater noise and shock sensitivity of ball bearings, this bearing technology should be given preference for fans exposed to extreme thermal and adverse application conditions (e.g. extreme environmental conditions, critical installation position, etc.). The service life data provided in this catalog is based on extensive service life tests and mathematically / scientifically proven service life calculations. Our product descriptions are updated continuously with all relevant data obtained from long-term tests.

Aerodynamics

With the aid of state-of-the-art computer programs, we are able to optimize the fan impellers and the inner shape of the housing. Air output and available motor performance are matched exactly to the size of fan. This guarantees the low noise that is typical for ebm-papst, even at high back pressure.

Sturdy construction – in metal or plastic

Fans of all-metal construction: sturdy and resistant. The housing is made of an aluminum alloy. The metal surfaces that are subject to corrosion are permanently protected by an impact- and abrasion-resistant electrophoretic baked enamel. This particular version is very recyclable. Fans with fiberglass-reinforced plastic housing and impeller: Excellent stability and low weight distinguish this highly efficient fan design. Combinations of metal housing and plastic impeller combine the advantages of both types of design.

Product images

The dimensioned drawings and product photos that appear in the catalog are for orientation purposes and may differ in some details from the actual product design.

Product liability

Motors and fans from ebm-papst are components intended for proper installation. The customer bears responsibility for the overall end product.

Safety is included

It goes without saying that all ebm-papst fans conform to the approval requirements of the VDE (Association of German Electrical Engineers)and the standards and regulations of UL and CSA. All fans conform to the European Standard EN 60335 or EN 60950 plus those of the UL (Underwriters Laboratories) and CSA (Canadian Standards Association). With few exceptions, our DC fans are designed to meet the requirements of protection class 3 / protection class voltage. AC fans for protection class 1. ebm-papst fans meet the highest requirements of electrical safety. All design variants feature reverse polarity and locked-rotor protection.

Quality in detail

It is the important details that reveal the meaning of the words "made by ebm-papst": Consistent adherence to development and design processes and a goal-oriented commitment to quality along the entire process chain are the foundation for the above-average service life of our fans. 100,000 hours and above are no longer an exception.
The no-compromise ebm-papst quality assurance spans over all process levels – from the choice of materials and the use of carefully selected, certified suppliers, from the production of parts up to the final assembly. These details combine to result in reliable fan products with an above-average service life.

ErP Directive

All products with power consumption between 125 W and 500 kW are subject to the European "Energy-related Products Directive" (ErP) for improving energy efficiency, with the first stage applicable from 2013 and the second as of 2015. Thanks to ground-breaking GreenTech EC technology, all of our fans and motors in these performance classes already exceed the ErP Directive today.

Tailor-made to meet your special requirements

Practical applications: fans that are customized and smart

ebm-papst has always developed customer-specific smart fans that meet the exact requirements of the application. We provide a wide range of standard fan types, in many sizes and designs; with smart motor features, monitoring and control functions, as well as special designs for use under extreme conditions. They are all based on the standard type fans that you will find in this catalog. Special fan types for your application can be produced in economical batch sizes. Our expert engineers will assist you in selecting the right configuration.

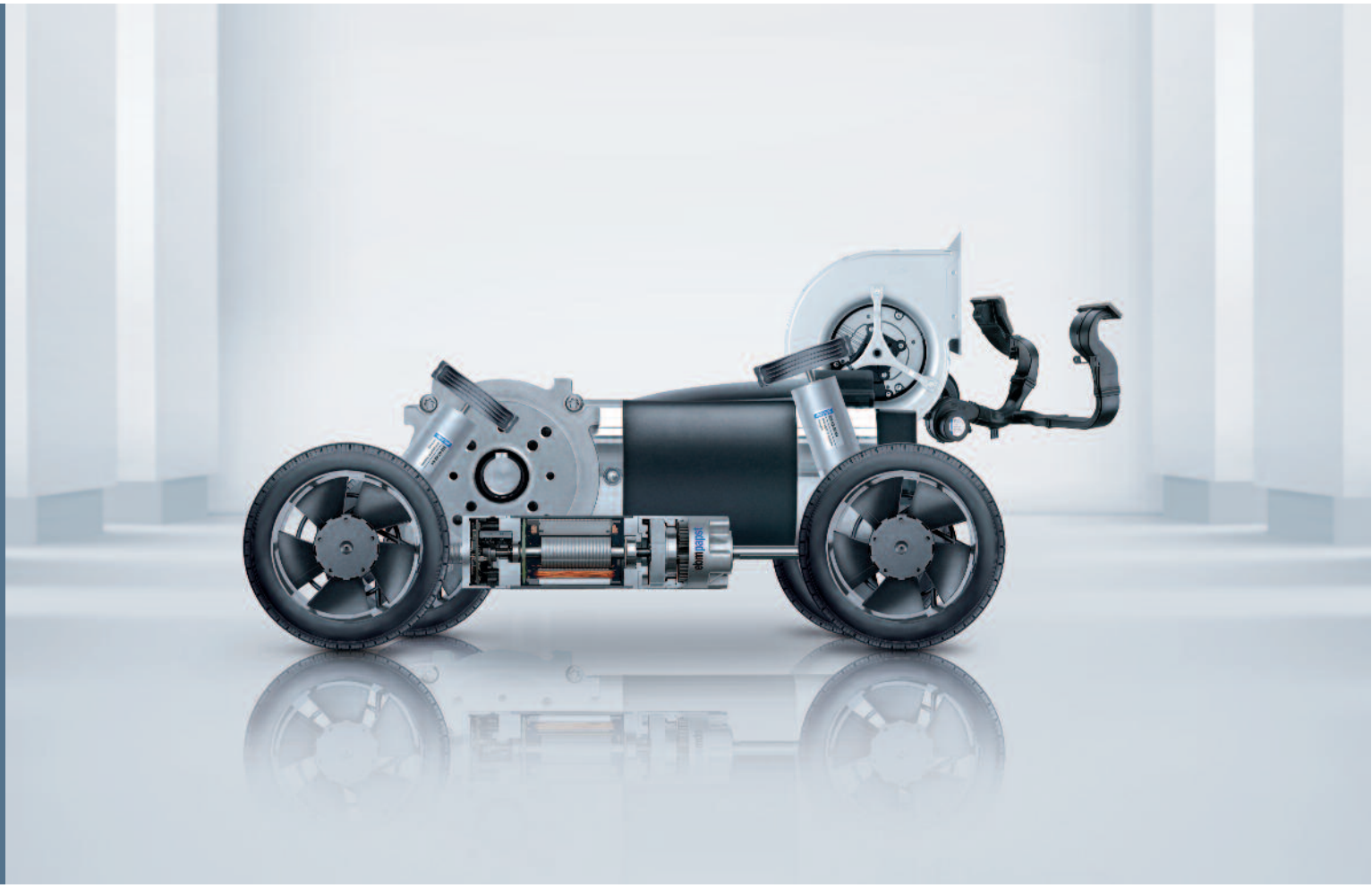

Innovation at its best:
Vario-Pro® with "intelligence inside". Its programmed intelligence thanks to customer-specifically configured software modules makes the cooling of electronics even more economical and flexible. For example, temperature-dependent speed profiles are possible with a number of freely selectable interpolation points. External speed settings and a variety of combinable alarm and tachometer functions can also be programmed. The digital motor management achieves high control accuracy.

Higher degree of protection for every type of application
ebm-papst provides, on request, many fan series in versions that meet to the requirements of degree of protection IP 54 and IP 68: Their stator and all electrical components are fully encapsulated. Stainless steel ball bearings can be used for operation in particularly aggressive media and use under extreme environmental conditions, thus providing additional reliability.

Almost anything is possible
Regardless of your cooling and ventilation tasks, we will develop the right solution. And the most economical one. Based on the fans listed in this catalog, more than 4000 different versions are available.

Temperature-controlled fans
Fans with temperature-controlled speed have particularly quiet cooling characteristics. Thanks to integrated IC technology, they adapt their speed to the current cooling requirements. The result is a drastic reduction of noise in most operating conditions. A temperature sensor provides the fan with thermal information: either externally via an exposed wire or integrated into the hub of the fan.

Speed setting via interfaces
With a wide range of DC fans with separate control input, ebm-papst provides an alternative to the NTC-controlled types of fans. They are especially suitable for systems and units that already have standard interfaces for varying speed via internal switching and control circuits. The main applications are units that require load-dependent, individual speed profiles or systems with minimum standby cooling requirements and varied speed increase at varying power peaks.

Electronic tachometer
Do you want to be informed about the current fan speed at all times? ebm-papst has fans with an integrated "electronic tachometer". It registers the actual value of the fan speed. Via an integrated sensor, the fan generates speed-dependent signals that can be used directly. Depending on the number of poles of the motor, 2, 3, or 6 pulses per revolution are generated.

Alarm signal for greater safety
If your application requires monitored fan operation, in addition to speed monitoring, ebm-papst also provides a multitude of varying alarm signals. Depending on the type of fan in question, the signal will either be static, already evaluated, or interface-compatible. The alarm signal output provides reliable long-term monitoring and a status signal if critical operating conditions arise.

S-Force
The new standard!
When you need to provide extremely fast, powerful and efficient cooling for electronic components of all kinds, the generation of S-Force high-performance fans finishes first: in air performance, pressure increase, and technology. Extremely efficient drives and optimized aerodynamics form the core technology of the S-Force fans, which we offer in both an axial and brand-new centrifugal model.

S-Panther
S-Panther power delivered quietly. Wherever there is need for power and reduced noise, fans from the S-Panther range are the right solution. A strong pressure saddle curve at optimum air flow provides the power of a real big cat, an S-Panther.

Optional special versions

(see chapter DC fans - specials)

In the catalog, a text box in the upper right corner provides information on the special designs that are technically possible in the fan series.
Please note that these special versions are not possible for all voltages and speeds, and not in all combinations. The special versions are designed for specific customers and projects and are usually not available off the shelf.

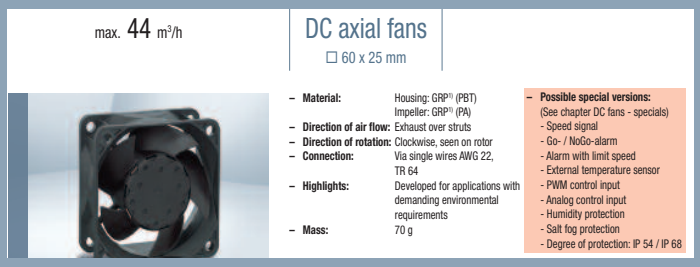

Possible special designs are depicted on the catalog page.

Speed signal /2, /12
The fan uses a separate wire to output information about its speed, and thus about the speed of the rotor. For technical details, please refer to page 168 and the following.

Go- / NoGo alarm /37, /39
The fan uses a separate wire to output a static signal when it is stationary, thus providing information about whether or not the rotor is turning. For technical details, please refer to page 175 and the following.

Alarm with speed limit /17, /19
When one of the speeds defined in the fan electronics is undershot, the fan outputs a static signal providing information that the set speed limit was undershot. For technical details, please refer to page 172 and the following.

External temperature sensor
An NTC resistor (negative temperature coefficient) is attached to the fan via a separate wire and the fan changes its speed depending on the temperature on the NTC. For technical details, please refer to page 178.

Internal temperature sensor
In this case, the NTC is integrated into the fan and the fan changes its speed depending on the temperature at the NTC. For technical details, please refer to page 178.

PWM control input
The speed of the fan can be changed via a pulse-width-modulated signal. This signal is applied to a specially provided wire. For technical details, please refer to page 179.

Analog control input
The speed of the fan can be changed via a control voltage. This control voltage is applied to a specially provided wire. For technical details, please refer to page 179.

Multi-option control input
The fan has a control input that the user can trigger either using a PWM signal, an analog signal, or a resistor. For technical details, please refer to page 180.

Moisture protection
Protection for the fan electronics against moisture and condensation. For technical details, please refer to page 181.

Degree of protection IP 54* / IP 68*
Protection of motor and circuit board against splashed water and moisture. For technical details, please refer to page 181.

Salt spray protection
Protection of fan against the damaging effects of salt spray. For technical details, please refer to page 181.

Direction of rotation
On many variants, the direction of rotation can be changed via a control input.

* IP = International degree of protection marking
For AC fans max. IP 65 available.

Types of fans and their function

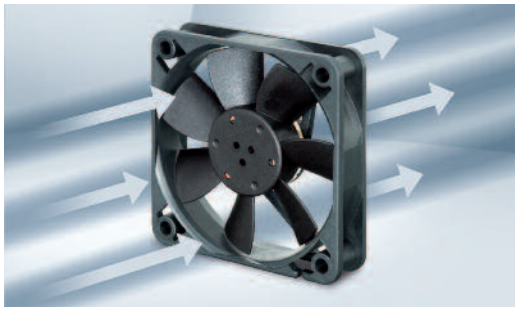

Axial fans:

High air flow with medium to relatively high pressure increase

The air flow in axial fans with an impeller that is similar to a propeller is conducted largely parallel to the axis of rotation, in other words in the axial direction. Axial fans with free air delivery at zero static pressure have the lowest power input that rises with increasing back pressure. Axial fans for cooling of electronic equipment are mostly equipped with external housing. The electric motor is integrated in the fan hub. This compact design allows space-saving accommodation of all devices. The flange is equipped with mounting holes.

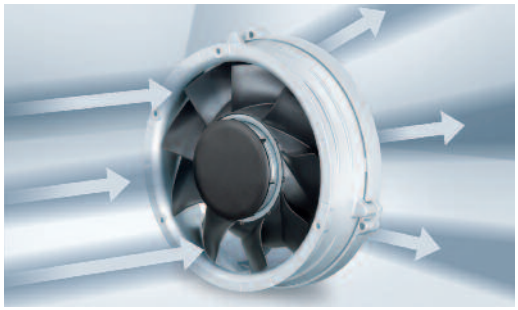

Diagonal fans:

High air flow at relatively high pressure increase

At first glance diagonal fans only differ slightly from axial fans. Intake is axial, whereas exhaust is diagonal. Due to the conical shape of the wheel and housing, the air is pressurized more in the diagonal fan. In direct comparison with axial fans of the same size and comparable performance, these fans are distinguished by the lower operating noise at high pressures.

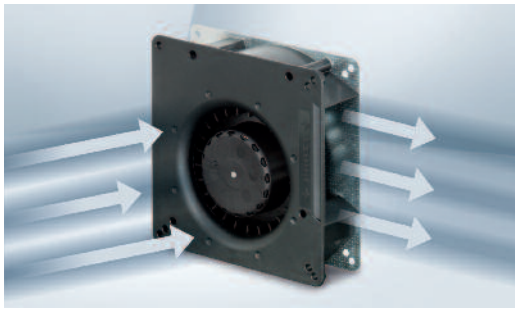

Centrifugal fans:

High pressure increase at limited flow rate

Generally, many cooling tasks can be performed excellently by axial and/or diagonal fans. But if the cooling airflow has to be deflected at an angle of 90°, for example, or if even greater pressure increase is necessary, centrifugal fans are more effective. For your application, ebm-papst offers not only complete centrifugal fans, but also motor/impeller combinations without external housing.

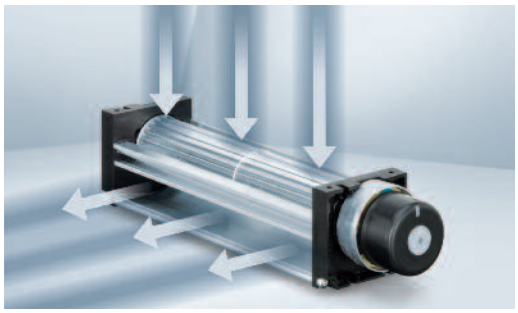

Tangential fans:

High air flow with low pressure increase

Tangential fans are used especially to produce a wide airflow distribution through devices. The air flows through the roller-shaped impellers twice in the radial direction: in the intake area from the outside to the inside and in the outflow area from the inside to the outside. Whirls form in the roller due to the vanes, which guarantee a steady flow of air through the impeller.

Selecting the correct fan

1. Dissipated energy

A large amount of the energy consumed by electrical and electronic devices is converted to heat. So when selecting the correct fan, it is important to determine the dissipated energy that must be removed. The electrical power consumption of the unit to be cooled often represents a suitable value for this purpose.

2. Admissible temperature increase

The air flow that the selected fan is required to generate, is determined by the dissipated energy and the admissible heating (ΔT) of the cooling airflow (from entry to exit of the device to be cooled). The maximum admissible ΔT depends greatly on the temperature sensitivity of the individual parts of the device.

For example, $\Delta T = 5K$ means that the average cooling airflow leaving the device to be cooled may be only 5°C warmer than the ambient temperature. This requires a lot of air. A lower air flow rate is sufficient if a higher temperature difference (e.g. $\Delta T = 20K$), can be tolerated.

3. Required cooling airflow

- In the diagram below, a horizontal line is drawn from the dissipated energy to intersect with the selected ΔT line.
- Read down from this point to obtain the required value for the cooling airflow. The diagram is based on the following formula:

$$q_V = \frac{P_V}{C_{PL} \cdot \rho_L \cdot \Delta T}$$

4. Optimum operating range

But the fan you are looking for must also be able to deliver a suitable static pressure increase Δpf, in order to force the cooling air through the device. So a fan must be selected that provides the required air flow performance within its optimum operating range (see also the air performance curves under technical data).

5. Fan selection

If more than one fan meets your requirements, the sound level, space requirements, economy, and ambient conditions will assist in making the final choice.

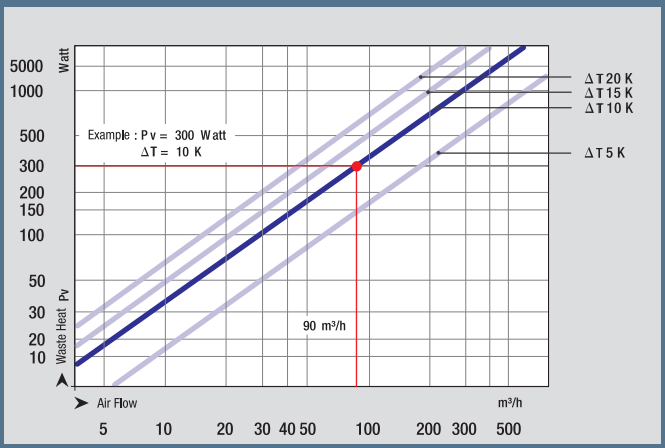

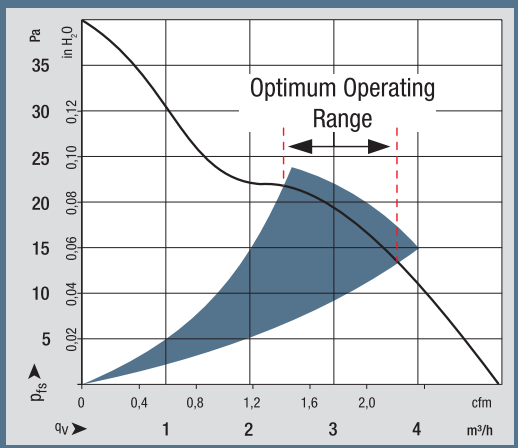

Definitions

P_V = amount of heat to be dissipated in [W]
C_{PL} = specific heat capacity of air in [J/kg/K]
C_{PL} = 1010 [J/kg/K]

ρ_L = air density in [kg/m^3]
ρ_L = 1,2 kg/m^3
$\Delta T = T_1 - T_2$ temperature difference in [K] between inlet and outlet

ebmpapst

Fan installation

Intake or exhaust side installation

Under ideal conditions, the operating point is represented as the intersection between the fan and loss curves, regardless of whether the fan is positioned at the air intake or exhaust side of the device. In addition to ensuring the required flow rate, several other aspects must be considered for determining an appropriate fan concept. The intake air currents of a fan are mainly laminar, comprising nearly the entire suction area. By contrast, the exhaust air of a fan is generally turbulent and flows in a preferred direction, such as axial for an axial fan.
The turbulence of the exhaust intensifies the heat transfer from components within the air currents, so that installing the fan on the air intake side of the device is recommended for cooling and heating. Installing the fan at the device intake is also advantageous because the fan will not be subjected to the dissipated heat of the device. Therefore, it operates at low ambient temperatures and has a greater life expectancy.

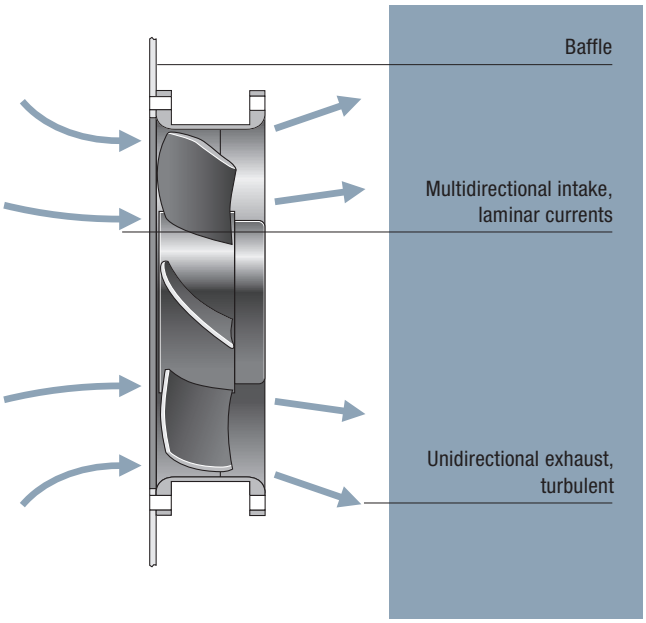

Information on installation

When a fan is operated for the first time in an application, the user may have noticed that the air flow in the device was lower than expected. What is the reason for this?

- The values stated in this catalog were determined under optimum, constant, and comparable measurement conditions.
- Ideal installation conditions under which free air intake and exhaust are present are seldom feasible in practice. Quite frequently, the fans have to be installed in close proximity to other components or cabinet panels. As a consequence, the intake and exhaust currents may be restricted, causing the air flow to diminish and the sound level to increase. Fans are particularly sensitive to obstructions that are positioned directly in front of the output cross section, and they often cause an increase in tonal noise.

Our advice: The distance between the fan and adjacent components should be at least equal to the installation depth of the fan.

Accident prevention

The turning rotor and the high speeds that are sometimes involved mean that our fan products carry an inherent risk of injury. They may only be operated after correct installation and with suitable protective equipment (e.g. with a finger guard). More information can be found in the Internet at: **www.ebmpapst.com/safety**

Connection instructions for S-Force fans

Special features of S-Force fans

The S-Force series is the most powerful product series. S-Force stands for the highest innovation in motor technology, fluid mechanics and electronics. The one-of-a-kind power density of the products requires special attention to the application at the customer's facility.

Service life

Due to the high currents in the fans, the load on the electrolyte capacitors is greater, which reduces the service life of the capacitor. As a larger or additional capacitor cannot be housed in the fan, the capacitor must be housed in the supply line.

If the power supply of the application has a corresponding capacitor, in some cases it may be possible to omit the external capacitor.

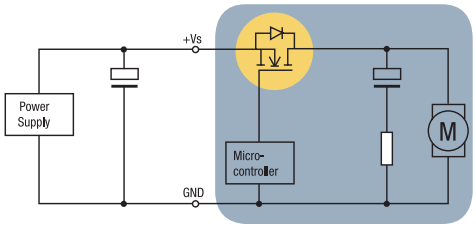

Recommended measure: additional external capacitor (must be installed as close to the fan as possible < 30 cm).

Fan	Capacitor required
S-Force axial	
8200 / 3200 JH3-JH4	no
4100 NH3 / NH4 / NH5 / NH6	no
4100 NH7 / NH8	yes
5300 / 5300 TD	no
6300 / 6300 TD / DV 6300	no
2200 FTD	no
S-Force centrifugal	
RET 97 TD	yes
RER 120 TD	yes
RER 133 TD	no
RER 160 NTDHH / RG 160 NTDHH	yes
REF 175 TD	no
RER 175 TD	no
RER 190 TD / RG 190 TD	no
RER 220 TD / RG 220 TD	no
RER 225 TDM / RG 225 TDM	no
RER 225 TD / RG 225 TD	no

Recommended capacitors

We recommend using the following capacitors from Rubycon:

24 VDC:

50 ZL 680 µF; 12.5 mm x 30 mm or

50 ZLH 680 µF 12.5 mm x 30 mm

48 VDC:

100 YXG 470 µF; 16 mm x 35.5 mm or

100 ZLH 470 µF 16 mm x 31.5 mm

Other capacitors with equal or greater capacitance and equal or lower serial resistance can also be used.

ebm-papst St. Georgen has the following capacitors in stock:

24 VDC: 1000 µF / 50 V, 16 mm x 25 mm

Art. no.: 992 0354 000 (LZ 354)

48 VDC: 680 µF / 100 V, 18 mm x 40 mm

Art. no.: 992 0355 000 (LZ 355)

Service life

Service life data from ebm-papst St. Georgen

Our fans catalog gives three different values for the service life of each product. The first column usually states the service life L_{10} at 40 °C. the second column usually states the service life L_{10} at T_{max}. Exceptions are marked in the column headings. The third column states the new value, life expectancy L_{10IPC} (40 °C).

Sound power level	Sintec sleeve bearings / Ball bearings	Input power	Nominal speed	Temperature range	Service life L_{10} (40 °C) ebm-papst Standard	Service life L_{10} (T_{max}) ebm-papst Standard	Life expectancy L_{10IPC} (40 °C) see page 17	Curve
Bel(A)	□ / ■	Watts	rpm	°C	Hours	Hours		
5,2	■	1,8	5 900	-20...+70	85 000 / 42 500	142 500		①
5,4	■	1,5	6 300	-20...+70	85 000 / 42 500	142 500		②

Example of the service life figures on the catalog page.

Service life L_{10} (40 °C) and L_{10} (T_{max})

The values given in the first two columns have been derived from intensive, in-house service life endurance tests in which our products are operated in various positions at 40 °C and 70 °C until they fail. A fan is deemed to have failed when it deviates from its defined air flow and speed values, or when the operating noise becomes noticeable. Such tests can take several years before a representative number of failures has been registered, and even today, some fans are still in the process of endurance testing, even though the test began early in the 1980s. These fans are proof of the legendary "made by ebm-papst" reliability.
Test results are presented in a diagram and the service life of the product L_{10} at the temperature tested is determined based on the Weibull distribution.
These tests have given us years of experience in the way various design parameters and temperatures can affect the service life of a product. Data for service life at various temperatures for new products can be stated with a very high degree of precision based on tests, product specifications, and commonalities in the design of the product.

Life expectancy L_{10IPC} (40 °C)

The new third service life column states the life expectancy L_{10IPC}. This information is based on the international standard IPC 9591. Again here, the foundations for the service life values are our service life endurance tests at high ambient temperatures. The service life at temperatures below the test temperatures is calculated using fixed factors. This method produces much higher service life values, especially at room temperature (see diagram on right).

Summary:

The life span calculations have been carried out to the best of our knowledge and are based on experience gained by ebm-papst. The specified L_{10} (40 °C), L_{10} (T_{max}) and L_{10IPC} (40 °C) values all allow statements to be made about the theoretical calculated service life under certain assumptions. The values determined here are extrapolations from our own service life tests and from statistical variables. In the respective customer applications, there may be different influencing factors that cannot be included in the calculations due to their complexity. The service life information is explicitly not a guarantee of service life, but strictly a theoretical quality figure.

Fans in an endurance test cabinet at ebm-papst St. Georgen.
1500 fans are operated in temperature cabinets until they fail.

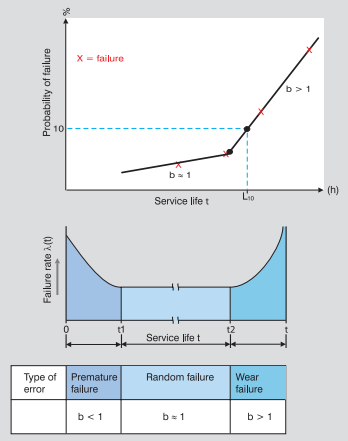

Bathtub curve and Weibull distribution.

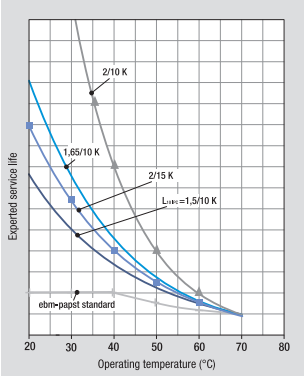

Example of the influence of factors from various manufacturers on the life expectancy.

Definitions

Nominal voltage [volts]
The voltage at which the nominal values (the table values listed in this catalog) were determined. The fan operation for DC fans is not limited to the nominal voltage. Fan speed and fan performance can vary according to the admissible voltage range that is specified on the nameplate of each fan. Please note that this is not a pulsed or modulated DC voltage.

Frequency [Hz]
ebm-papst AC fans are made for operating frequencies of 50 Hz or 60 Hz. Their technical data changes accordingly.

Air flow [m^3/h, cfm]
The air performance of the fan in free air operation, i.e. the fan blows into the free space without static pressure increase.

Fan curves
The fan curves are determined in accordance with DIN ISO 5801 specifications on a dual-chamber test stand with intake side measurement. This measurement technique closely approximates the operating conditions experienced in typical applications for fans and yields realistic performance curves. The curves apply to an air density of ρ =1.2 kg/m^3 corresponding to an air pressure of 1013 mbar at 20 °C. Variations in air density affect pressure generation, but not the flow rate. The pressure generated at other air densities can be estimated with the formula $\Delta\rho 2 = \Delta\rho 1\ (\rho 2 / \rho 1)$.
The nominal speed values, air flow and power consumption listed in the table were measured in free air operation with horizontal shaft at an ambient temperature of 20 +5 °C, air density ρ =1.2 kg/m^3 after a warmup period of 5 min.

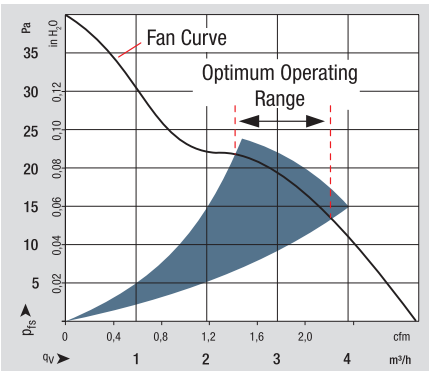

Optimum operating range
The optimum operating range is always indicated in the colored area in the air performance diagrams. In this range the fans operate best with respect to efficiency and sound level. Within this optimum operating range the sound level only fluctuates slightly.

Noise [dB(A), Bel(A)]

1. Sound pressure level – dB(A)
Noise ratings of the fan in free air operation, i.e. at maximum flow rate.

2. Sound power level 1 Bel(A) = 10 dB(A)
Extent of the overall sound radiation of the fan. The sound power level is determined in the optimum operating range.

PAPST Sintec® sleeve bearings
A particularly economical bearing system with excellent advantages:
– Very precise, large sintered bearings
– Low running noise
– High service life expectancy
– Resistant to shock and vibration

Ball bearings
Precision ball bearings for particularly high ambient temperatures and high service life expectancy.

Power consumption [watts]
Input performance of the fan motor when operating free blowing at nominal voltage. Depending on the operating condition in the application, the power consumption may be higher.

Temperature range [°C]
The admissible ambient temperature range within which the fan can be expected to run continuously.

Service life [h]

Service life L_{10} at 40 °C and T_{max}
Standard figures for service life at ebm-papst. These two temperatures are based on intensive, in-house endurance tests and on experience from more than 60 years developing fans.

Life expectancy L_{10IPC} (40 °C)
Information calculated in line with the standard IPC 9591. Data based on the internal life expectancy at 70 °C, more optimistically extrapolated to 40 °C.

We expressly state that none of the information or data in this catalog is to be construed as a guarantee or warranty of properties.

Unit conversion

Air flow	**Pressure**
1 cfm = 1.7 m^3/h	1 Pa = 1x10^{-5} bar
1 l/s = 3.6 m^3/h	1 inch H_2O = 249 Pa
1 l/min = 0.06 m^3/h	1 mm H_2O = 9.81 Pa

Subject to technical changes.
We do not support aerospace applications with our products.
German and international patents (registered designs and utility models).
ebm-papst is a registered trademark of ebm-papst Mulfingen GmbH & Co. KG.
PAPST, SINTEC, VARIOFAN and Vario-Pro are registered trademarks of ebm-papst St. Georgen GmbH & Co. KG.

Standard test equipment to determine the fan characteristics

Pressure/air flow

Blow-down test facility acc. to ISO 5801

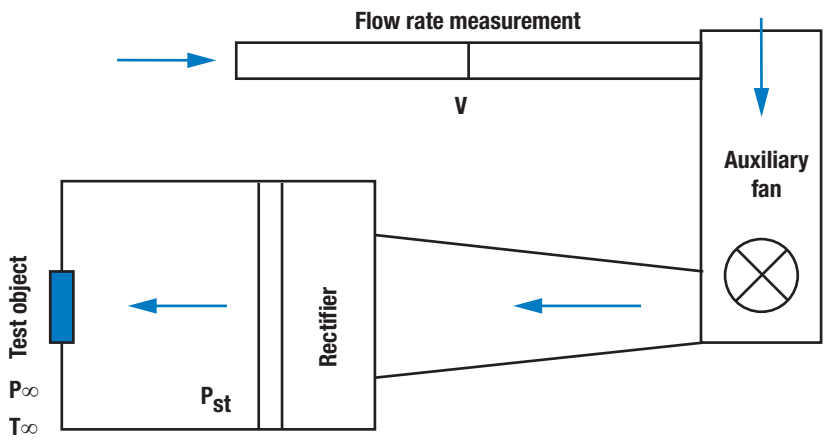

Sound power level pressure/air flow:

Outlet side regulated test rig in semi-anechoic chamber according to ISO 10302

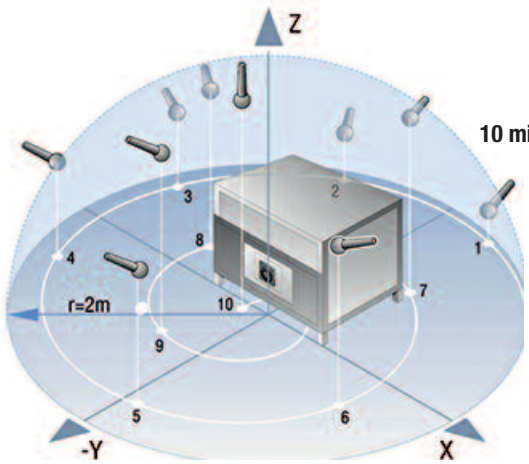

10 microphones (r = 2 m)

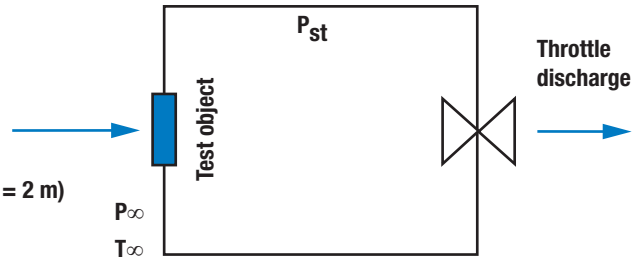

Type code

3-digit DC axial fan e.g. 412 FM

Housing dimensions (W x H x D)

Value	Edge dim. (W x H)	Installation depth (D)
2	25 x 25 mm	8 mm
4	**40 x 40 mm**	**10 / 20 / 25 / 28 mm**
5	50 x 50 mm	15 mm
6	60 x 60 mm	15 / 25 / 32 mm
7	70 x 70 mm	15 mm

Operating voltage

Value	Nominal voltage
2	**12 V**
4	24 V
5	5 V
8	48 V

4 1 2 F M

Motor and housing version

Value	Version
1	**4xx fan, 10 / 20 / 25 / 28 mm (D)**
1	6xx fan, 15 / 25 / 32 mm (D)
2	25 / 28 mm (D)
3	63x fan, 25 mm (D)
5	2xx fan, 8 mm (D)

Options (various versions possible)

A	Analog speed control input (input voltage: 0…5 / 0...10 V DC)
D	Reinforced flange corners with through-holes (series 44xx F) Constant speed control regardless of operating voltage
E	Economy fan with round flange
F	**Flat construction / frequency-modulated signal**
G	Sleeve bearing
H	High speed
HH	Further increased speed
H3-H8	Additional further increased speeds (H8 - maximum fan speed)
I	Integrated temperature sensor (NTC behavior, i.e. thermistor)
J	Jet characteristic / rigid curve
L	Low speed
M	**Medium speed**
ML	Between low and medium speed
N	Standard or basic speed (only DC fans)
O	Multi-option speed control input (analog or PWM signal)
P	PWM speed control input (pulse-width modulated signal)
R	Moisture protection coating Circuit board and winding (IP 20), optional stainless steel ball bearing
S	Speed signal (additional wires for hall signal, obsolete technology)
T	External temperature sensor (NTC behavior, i.e. thermistor)
TD	Turbo drive (extremely powerful 3-phase motor)
U	Environmentally friendly fan (min. IP 54)
V / VP	VARIOFAN
W	Additional wires (standard length 310 mm)
X	Mounting bore hole 3.7 mm
-xxx	Variant number

4-digit DC axial fan, e.g. 4312 GM

Housing dimensions (W x H x D)

Value	Edge dimensions (W x H)	Installation depth (D)
2	Ø 220 x 200 mm	51 mm
3	92 x 92 mm	25 / 32 / 38 mm
4	**119 x 119 mm**	**25 / 32 / 38 mm**
5	127 x 127 mm	38 mm
5	135 x 135 mm	38 mm
5	140 x 140 mm	51 mm
6	Ø 172 mm	51 mm
6	Ø 172 x 150 / 160 mm	51 mm
7	Ø 150 mm	38 / 55 mm
8	80 x 80 mm	25 / 32 / 38 mm

Connection type and direction of rotation

Value	Connection type	Direction of rotation
1	**Wires, length = 310 mm**	
5	Wires, length = 310 mm	
6	Plug, 2.8 x 0.8 mm	Counterclockwise (CCW)
7	Plug, 2.8 x 0.8 mm	Clockwise (CW)
8	Plug, 2.8 x 0.5 mm	Counterclockwise (CCW)
9	Plug, 2.8 x 0.5 mm	Clockwise (CW)

4 3 1 2 G M

Motor and housing version

Value	Version
1	38 mm (D)
2	38 mm (D)
3	**32 mm (D)**
4	25 / 38 / 51 mm (D)

Operating voltage

Value	Nominal voltage
2	**12 V**
4	24 V
6	36 V
8	48 V

Options (various versions possible)

A	Analog speed control input (input voltage: 0…5 / 0...10 V DC)
D	Reinforced flange corners with through-holes (series 44xx F) Constant speed control regardless of operating voltage
DV	Diagonal Venturi fan
E	Economy fan with round flange
F	Flat construction / frequency-modulated signal
G	**Sleeve bearing**
H	High speed
HH	Further increased speed
H3-H8	Additional further increased speeds (H8 - maximum fan speed)
I	Integrated temperature sensor (NTC behavior, i.e. thermistor)
J	Jet characteristic / rigid curve
L	Low speed
M	**Medium speed**
ML	Between low and medium speed
N	Standard or basic speed (only DC fans)
O	Multi-option speed control input (analog or PWM signal)
P	PWM speed control input (pulse-width modulated signal)
R	Moisture protection coating Circuit board and winding (IP 20), optional stainless steel ball bearing
S	Speed signal (additional wires for hall signal, obsolete technology)
T	External temperature sensor (NTC behavior, i.e. thermistor)
TD	Turbo drive (extremely powerful 3-phase motor)
U	Environmentally friendly fan (min. IP 54)
V / VP	VARIOFAN
W	Additional wires (standard length 310 mm)
X	Mounting bore hole 3.7 mm
-xxx	Variant number

All measurements are given in mm.

Type code

DC centrifugal fan e.g. RER 160-28/12 N

Options (various versions possible)

A	Analog speed control input (input voltage: 0…5 / 0...10 V DC)
D	Reinforced flange corners with through-holes (series 44xx F) Constant speed control regardless of operating voltage
E	Economy fan with round flange
F	Flat construction / frequency-modulated signal
G	Sleeve bearing
H	High speed
HH	Further increased speed
H3-H8	Additional further increased speeds (H8 - maximum fan speed)
I	Integrated temperature sensor (NTC behavior, i.e. thermistor)
J	Jet characteristic / rigid curve
L	Low speed
M	Medium speed
ML	Between low and medium speed
N	**Standard or basic speed (only DC fans)**
O	Multi-option speed control input (analog or PWM signal)
P	PWM speed control input (pulse-width modulated signal)
R	Moisture protection coating Circuit board and winding (IP 20), optional stainless steel ball bearing
S	Speed signal (additional wires for hall signal, obsolete technology)
T	External temperature sensor (NTC behavior, i.e. thermistor)
TD	Turbo drive (extremely powerful 3-phase motor)
U	Environmentally friendly fan (min. IP 54)
V / VP	VARIOFAN
W	Additional wires (standard length 310 mm)
X	Mounting bore hole 3.7 mm
-xxx	Variant number

Type — Housing and fan impeller versions

Type	Housing	Impeller blade design
RE	None	Non-curved, no direction of rotation set
REF	None	Forward/backward-curved impeller blades, flat
RER	**None**	**Backward-curved impeller blades**
RET	None	Forward-curved impeller blades
RG	Square	Forward/backward-curved impeller blades
RL	Round	Forward-curved impeller blades
RLF	Round	Forward/backward-curved impeller blades, flat
RV	Round	Forward-curved impeller blades

Fan impeller blade height

R E R 1 6 0 - 2 8 / 1 2 N

Impeller diameter in mm

Operating voltage

Value	Nominal voltage
/12	**12 V**
/14	24 V
/18	48 V

Crossflow blower e.g. QG 030-148/12

Housing dimensions (W x H)

Value	Edge dim. (W x H)	Impeller length	Total length
148	**48 x 50 mm**	**148 mm**	**201 mm**
198	48 x 50 mm	198 mm	258 mm
303	48 x 50 mm	303 mm	363 mm
353	48 x 50 mm	353 mm	413 mm

Type — Housing and fan impeller versions

Type	Housing	Impeller blade design
QG	**Round**	**Compressor drum**

Q G 0 3 0 - 1 4 8 / 1 2

Impeller diameter in mm

Operating voltage

Value	Nominal voltage
/12	**12 V**
/14	24 V

All measurements are given in mm.

Type code

4-digit GreenTech EC tubeaxial fans axial fan e.g. ACi 4420 HH

A C i 4 4 2 0 H H

Housing dimensions (W x H x D)

Value	Edge dim. (W x H)	Installation depth (D)
1	Ø 98.5 mm	130 mm
3	92 x 92 mm	38 mm
4	**119 x 119 mm**	**25 / 32 / 38 mm**
6	Ø 172	51 mm
8	80 x 80 mm	32 mm

Operating voltage

Value	Nominal voltage	Frequency	Version
0	115 / 230 V	50 / 60 Hz	Wide voltage range input (85-265 V AC)
1	115 V	50 Hz	
2	**230 V**	**50 Hz**	

Options (various versions possible)

A	Analog speed control input (input voltage: 0…5 / 0...10 V DC)
D	Reinforced flange corners with through-holes (series 44xx F) Constant speed control regardless of operating voltage
E	Economy fan with round flange
F	Flat construction / frequency-modulated signal
G	Sleeve bearing
H	High speed
HH	**Further increased speed**
H3-H8	Additional further increased speeds (H8 - maximum fan speed)
I	Integrated temperature sensor (NTC behavior, i.e. thermistor)
J	Jet characteristic / rigid curve
L	Low speed
M	Medium speed
ML	Between low and medium speed
N	Standard or basic speed (only DC fans)
O	Multi-option speed control input (analog or PWM signal)
P	PWM speed control input (pulse-width modulated signal)
R	Moisture protection coating Circuit board and winding (IP 20), optional stainless steel ball bearing
S	Speed signal (additional wires for hall signal, obsolete technology)
T	External temperature sensor (NTC behavior, i.e. thermistor)
TD	Turbo drive (extremely powerful 3-phase motor)
U	Environmentally friendly fan (min. IP 54)
V / VP	VARIOFAN
W	Additional wires (standard length 310 mm)
X	Mounting bore hole 3.7 mm
-xxx	Variant number

Basic design

Value	Version
AC	DC basic fan with integrated AC/DC power supply
ACi	**EC technology (electronics completely integrated)**

Motor and housing version

Value	Version
0	130 mm (D)
1	51 mm (D)
2	38 / 51 mm (D)
3	32 mm (D)
4	**25 / 38 mm (D)**

Bearing type and insulation class

Value	Bearing type	Insulation class
0	**Ball bearing**	**E**

AC axial fan e.g. 3950 L

3 9 5 0 L

Housing dimensions (W x H x D)

Value	Edge dim. (W x H)	Installat. depth (D)
3	**92 x 92 mm**	**25 / 38 mm**
4	119 x 119 mm	25 / 32 / 38 mm
5	127 x 127 mm	38 mm
5	135 x 135 mm	38 mm
5	140 x 140 mm	51 mm
6	Ø 172 mm	51 / 52 mm
7	Ø 150 mm	55 mm
7	Ø 150 x 172 mm	38 mm
8	80 x 80 mm	38 mm
9	119 x 119 mm	25 mm

Operating voltage

Value	Nominal voltage	Frequency
0	115 V	60 Hz
2	115 V	60 Hz
3	115 V	60 Hz
4	115 V	50 Hz
5	**230 V**	**50 Hz**
6	115 V / 230 V	50 Hz / 60 Hz
7	230 V	50 Hz
8	230 V	60 Hz
9	230 V	60 Hz

Options (various versions possible)

A	Intake via bars
E	Made by ebm-papst Mulfingen (6xxx, 7xxx range) or round flange
H	Speed signal 1 Impulses per 360 degrees (additional magnet sensor and hall sensor)
L	**Low speed**
M	Medium speed
N	Air intake via struts (ø mounting bore hole)
R	Moisture protection coating Circuit board and winding (IP 20), optional stainless steel ball bearing
S	Integrated temperature switch
T	Mounting bracket
U	Environmentally friendly fan (min. IP 54)
V	Air exhaust over struts
W	Additional wires (standard length 310 mm)
X	Mounting bore hole 3.7 mm
-xxx	Variant number
Z	Air exhaust over struts, reinforced flange corners with through-holes

Motor and housing version

Value	Version
4	Shaded-pole motor, 55 mm (D) medium speed
5	Shaded-pole motor, 38 mm (D) medium / high speed
6	Shaded-pole motor, 38 mm (D) high speed
7	Shaded-pole motor, 38 mm (D) with mounting bracket
8	Shaded-pole motor, slow / medium speed
9	**Shaded-pole motor, 25 / 38 mm (D)**

Bearing type and insulation class

Value	Bearing type	Insulation class
0	**Sleeve bearing**	**E**
5	Ball bearing	E
6	Ball bearing	F
8	Ball bearing	E

All measurements are given in mm.

Type code

AC centrifugal fan e.g. RER 160-28/56 S

Type — Housing and fan impeller versions

Type	Housing	Impeller blade design
RE	None	Non-curved, no direction of rotation set
REF	None	Forward/backward-curved impeller blades, flat
RER	**None**	**Backward-curved impeller blades**
RET	None	Forward-curved impeller blades
RG	Square	Forward/backward-curved impeller blades
RL	Round	Forward-curved impeller blades
RLF	Round	Forward/backward-curved impeller blades, flat
RV	Round	Forward-curved impeller blades

Options (various versions possible)

A	Intake via bars
E	Made by ebm-papst Mulfingen (6xxx, 7xxx range) or round flange
H	Speed signal 1 Impulses per 360 degrees (additional magnet sensor and hall sensor)
L	Low speed
M	Medium speed
N	Air intake via struts (ø mounting bore hole)
R	Moisture protection coating Circuit board and winding (IP 20), optional stainless steel ball bearing
S	**Integrated temperature switch**
T	Mounting bracket
U	Environmentally friendly fan (min. IP 54)
V	Air exhaust over struts
W	Additional wires (standard length 310 mm)
X	Mounting bore hole 3.7 mm
-xxx	Variant number
Z	Air exhaust via bars, reinforced flange joints with through-holes

Fan impeller blade height

R E R 1 6 0 - 2 8 / 5 6 S

Impeller diameter in mm

Operating voltage

Value	Nominal voltage	Frequency
/00	115 V	60 Hz
/06	115 V	60 Hz
/50	230 V	50 Hz
/56	**230 V**	**50 Hz**

DC centrifugal fan e.g. R3G 190-RN 38-01

Note: This type code specifies fans from ebm-papst Mulfingen and can be used to clearly identify and order them:

Type — Housing and fan impeller versions

A	Axial fan
S	Axial fan with finger guard
W	Axial fan with fan housing
V	Axial combination
R	**Centrifugal fan, single inlet**
G	Centrifugal blower, single inlet (with scroll housing)
B	Centrifugal fan, dual inlet
G	Centrifugal blower, dual inlet (with scroll housing)
K	Centrifugal combination

Impeller diameter in mm

Key for mechanical design

Key for mechanical variants

R 3 G 1 9 0 - R N 3 8 - 0 1

Number of poles (AC)

2	2-pole

Number of cores (DC/EC)

1	1-phase/core
3	**3-phase/core**

Motor type

D	Three-phase motor
E	Single-phase motor with motor run capacitor
G	**DC/EC motor**

Key for electrical design

All measurements are given in mm.

DC axial fans

DC axial fans

Technical information



Product line
ebm-papst offers you the widest full product line of DC axial and diagonal fans from 25 mm to 280 mm in size. Every single type of fan can be optimally integrated in the respective device concept. The highly economical brushless motor technology of these fans provides a unique variety of intelligent innovations at prices that would have been unthinkable a few years ago.

Electronic protection against reverse polarity
ebm-papst DC fans have electronically commutated drives with electronic protection against reverse polarity. The electronics are integrated in the fan's impeller hub to save space.

Product life expectancy
A distinctive feature of DC fan technology is the amazing product life expectancy. The outstanding efficiency of the brushless drive results in lower heat stress for the bearings, which significantly increases the service life of the fan.

Degree of protection
DC fans with sleeve and ball bearings are powered by class E insulated motors. All ebm-papst fans conform to the requirements of degree of protection IP 20. Fans conforming to IP 54 / IP 68 and special degrees of protection are also available.

Voltage range
Many of our DC fans can be operated on voltages that are up to 50% lower and 25% higher than their nominal voltage (see voltage range in the technical tables). This allows the air performance to be adapted to the cooling requirements and the noise to be reduced, even if the fan does not have a control input.

Closed-loop speed control and monitoring
Closed-loop speed control and function monitoring are becoming increasingly important in many applications. ebm-papst offers many fans in the standard design with a control input and open-collector speed signal.

S-Force
The new S-Force fans with their extremely high blower capacity of up to 1100 m^3/h and pressure increase of up to 1400 pascals are capable of dealing with the extreme heat load. If needed, these fans can produce up to 100% more output under full load, and they work with a much broader delivery bandwidth than current models. This makes them ideal for equipment and systems with a high density of components. Thanks to intelligent motor features, they can be adapted individually for any application. S-Force fans are available in standard dimensions. The air flow rate is amazing!

S-Panther
S-Panther power delivered quietly. Wherever there is need for power and reduced noise, fans from the S-Panther range are the right solution. A strong pressure saddle curve at optimum air flow provides the power of a real big cat, an S-Panther.

Axial fans for DC operation

Overview of air performance

	Dimension	Series	Air flow	Page
	mm		m³/h	
	☐ 25 x 8	250	2.3...4.6	31
	☐ 40 x 10	400 F	6...9	32
	☐ 40 x 20	400	10...13.5	33
	☐ 40 x 28	420 J	24...38	34
	☐ 50 x 15	500 F	11...20	35
	☐ 60 x 15	600 F	19...33	36
	☐ 60 x 25	620	21...67	37
	☐ 60 x 25	630	40...58	38
	☐ 60 x 25	600 N	21...56	39
	☐ 60 x 25	600 N VARIOFAN	16...41	40
	☐ 60 x 32	600 J	70...82	41
	☐ 70 x 15	700 F	28...44	42
	☐ 80 x 25	8450	32...117	43
	☐ 80 x 25	8400 N	33...79	44
	☐ 80 x 25	8400 N VARIOFAN	20...58	45
	☐ 80 x 32	8300	32...80	46
	☐ 80 x 38	8200 J	132...222	47
	☐ 92 x 25	3400 N	61...102	48
	☐ 92 x 25	3400 N VARIOFAN	44...84	49
	☐ 92 x 32	3300 N	56...133	50
S-Force	☐ 92 x 38	3200 J	130...280	51
S-Panther	☐ 92 x 38	3250 J	145...270	52
	☐ 119 x 25	4400 F	94...170	53
	Ø 127	4400 F	91	54
	☐ 119 x 25	4400 FN	200...225	55
	☐ 119 x 32	4300	95...204	56
	☐ 119 x 32	4300 VARIOFAN	65...170	57

Subject to change

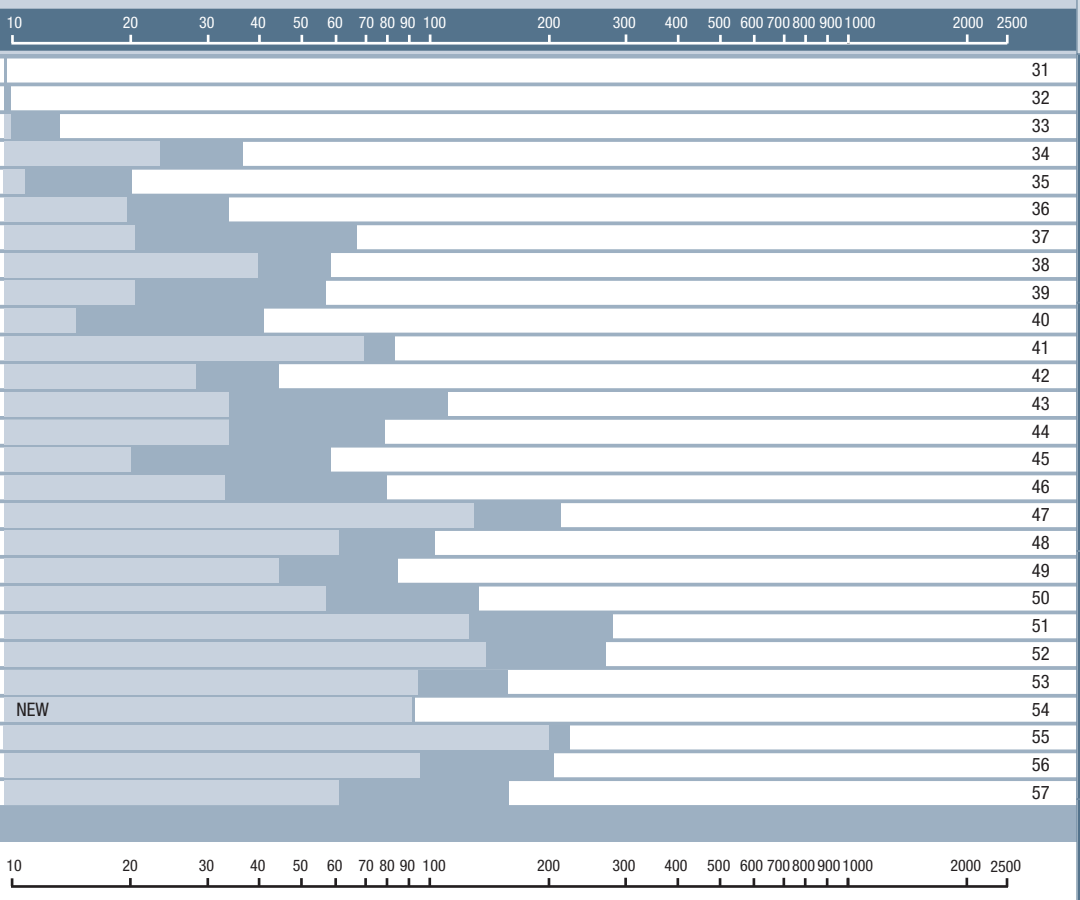

Axial fans for DC operation

Overview of air performance

	Dimension	Series	Air flow	Page
	mm		m³/h	
	□ 119 x 38	4400	100...285	58/59
	□ 119 x 38	4100 N	160...237	60
S-Force	□ 119 x 38	4100 NHH..NH6	260...440	61
S-Force	□ 119 x 38	4100 NH7..NH8	500...570	62
	□ 119 x 38	DV 4100	280	63
	□ 127 x 38	5200 N	187...340	64
	□ 127 x 38	DV 5200	270...320	65
	□ 135 x 38	5100 N	260	66
S-Force	□ 140 x 51	5300	340	67
S-Force	□ 140 x 51	5300 TD	410...670	68
	Ø 150 x 38	7100 N	308...360	69
	Ø 150 x 55	7200 N	360	70
	172 x 150 x 51	6400	350...480	71
	172 x 150 x 51	6400 TD	90...900	72
	172 x 160 x 51	DV 6400	530	73
	172 x 160 x 51	DV 6400 TD	100...680	74
S-Force	172 x 160 x 51	6300 TD	710...930	75
S-Panther	Ø 172 x 51	6300 N	540...685	76
S-Panther	Ø 172 x 51	6300 NTD	970...1030	77
S-Force	Ø 172 x 51	6300	395...545	78
S-Force	Ø 172 x 51	6300 TD	600...930	79
S-Force	Ø 172 x 51	DV 6300 TD	630...1100	80
S-Force	220x200x51	2200 FTD	790...1220	81
	□ 225 x 80	K1G 200	1020...1245	82
	□ 225 x 89	K3G 200	725...1650	84
	Ø 250	W1G 250	2070	86
	Ø 300	*1G 300	2320...2345	88

Subject to change

ebmpapst

Axial fans for DC operation

Overview of technically feasible designs

Axial fans

Dimension	mm	Series	VDE, UL, CSA	SINTEC sleeve bearings / ball bearings	Speed signal	Go / NoGo alarm	Alarm with speed limit	External temperature sensor	Internal temperature sensor	PWM control input	Analog control input	Multi-options control input	Moisture protection	IP >= 54	IP 68	Salt spray protection	Reversible direction of rotation	Page
					OPTIONAL													P.
	☐ 25 x 8	250	yes	▫	•	–	–	–	–	–	–	–	•	–	–	–	–	31
	☐ 40 x 10	400 F	yes	▫	•	•	–	–	–	–	–	–	•	–	–	–	–	32
	☐ 40 x 20	400	yes	▫	•	•	–	–	–	•	–	–	•	–	–	–	–	33
	☐ 40 x 28	420 J	yes	■	•	•	–	•	–	•	–	–	•	–	–	•	–	34
	☐ 50 x 15	500 F	yes	▫	•	•	–	–	–	•	–	–	•	–	–	–	–	35
	☐ 60 x 15	600 F	yes	▫	•	•	–	–	–	•	–	–	•	–	–	–	–	36
	☐ 60 x 25	620	yes	■	•	•	•	•	•	•	•	–	•	–	–	–	–	37
	☐ 60 x 25	630	yes	■	•	•	•	•	–	•	•	–	•	•	•	•	–	38
	☐ 60 x 25	600 N	yes	▫/■	•	•	–	–	–	–	–	–	•	•	•	–	–	39
	☐ 60 x 25	600 N VARIOFAN	yes	▫/■	•	•	–	•	•	–	–	–	•	–	–	–	–	40
	☐ 60 x 32	600 J	yes	■	•	•	–	•	–	•	•	–	•	–	–	–	–	41
	☐ 70 x 15	700 F	yes	▫	•	•	–	–	–	–	–	–	•	–	–	–	–	42
	☐ 80 x 25	8450	yes	▫/■	•	•	•	•	•	•	•	–	•	–	–	–	–	43
	☐ 80 x 25	8400 N	yes	▫/■	•	•	•	•	•	•	•	–	•	•	•	–	–	44
	☐ 80 x 25	8400 N VARIOFAN	yes	▫	•	•	–	•	•	–	–	–	•	–	–	–	–	45
	☐ 80 x 32	8300	yes	■	•	•	•	•	•	•	•	–	•	•	•	•	–	46
	☐ 80 x 38	8200 J	yes	■	•	•	•	•	•	•	•	–	•	•	–	–	–	47
	☐ 92 x 25	3400 N	yes	▫/■	•	•	•	•	•	•	•	–	•	•	•	–	–	48
	☐ 92 x 25	3400 N VARIOFAN	yes	▫	•	•	–	•	•	–	–	–	•	–	–	–	–	49
	☐ 92 x 38	3300 N	yes	■	•	•	–	•	•	•	•	–	•	•	•	•	–	50
S-Force	☐ 92 x 38	3200 J	yes	■	•	•	•	•	•	•	•	–	•	•	•	–	–	51
S-Panther	☐ 92 x 38	3250 J	yes	■	•	•	–	•	•	•	•	–	•	•	•	•	–	52
	☐ 119 x 25	4400 F	yes	▫/■	•	•	•	•	•	•	•	–	•	–	–	–	–	53
NEW	Ø 172	4400 F	yes	▫	•	•	•	•	•	•	•	–	•	–	–	–	•	54
	☐ 119 x 25	4400 FN	yes	■	•	•	•	•	•	•	•	–	•	–	–	–	–	55
	☐ 119 x 32	4300	yes	▫/■	•	•	•	•	•	•	•	–	•	•	•	•	–	56
	☐ 119 x 32	4300 VARIOFAN	yes	■	•	•	•	•	•	•	•	–	•	–	–	–	–	57

Subject to change

– not yet available
• Available

▫ Sleeve bearings
■ Ball bearings

Please note that these special versions are not possible for all voltages and speeds, and not in all combinations. The special versions are designed for specific customers and projects. As a rule, they are not available off the shelf and are based on minimum quantities.

Please consult your customer support representative about the feasibility of your special variant.

Axial fans for DC operation

Overview of technically feasible designs

	Dimension		VDE, UL, CSA	SINTEC sleeve bearings / ball bearings	Speed signal	Go / NoGo alarm	Alarm with speed limit	External temperature sensor	Internal temperature sensor	PWM control input	Analog control input	Multi-options control input	Moisture protection	IP >= 54	IP 68	Salt spray protection	Reversible direction of rotation	Page
Axial fans																		
	mm	**Series**								**OPTIONAL**								**P.**
	☐ 119 x 38	4400	ja	■	•	•	•	•	•	•	•	–	•	•	–	–	–	58/59
	☐ 119 x 38	4100 N	ja	▫/■	•	•	•	•	•	•	•	–	•	•	•	•	–	60
S-Force	☐ 119 x 38	4100 NH..NH6	ja	■	•	•	•	•	•	•	•	–	•	•	•	•	–	61
S-Force	☐ 119 x 38	4100 NH7..NH8	ja	■	•	•	•	•	•	•	•	–	•	–	–	•	–	62
	☐ 119 x 38	DV 4100	ja	■	•	•	•	•	•	•	•	–	•	•	•	•	–	63
	☐ 127 x 38	5200 N	ja	■	•	•	•	•	•	•	•	–	•	•	•	•	–	64
	☐ 127 x 38	DV 5200	ja	■	•	•	•	•	•	•	•	–	•	•	–	•	–	65
	☐ 135 x 38	5100 N	ja	■	•	•	•	•	•	•	•	–	•	•	–	•	–	66
S-Force	☐ 140 x 51	5300	ja	■	•	•	•	•	•	•	•	–	•	•	–	•	–	67
S-Force	☐ 140 x 51	5300 TD	ja	■	•	•	•	•	•	•	•	•	•	•	–	•	–	68
	Ø 150 x 38	7100 N	ja	■	•	•	•	•	•	•	•	–	•	•	•	•	–	69
	Ø 150 x 55	7200 N	ja	■	•	•	•	•	•	•	•	–	•	•	•	•	–	70
	172 x 150 x 51	6400	ja	■	•	•	•	•	•	•	•	–	•	•	–	•	–	71
	172 x 150 x 51	6400 TD	ja	■	•	•	•	•	•	•	•	–	•	•	–	•	•	72
	172 x 150 x 51	DV 6400	ja	■	•	•	•	•	•	•	•	–	•	•	–	•	–	73
	172 x 150 x 51	DV 6400 TD	ja	■	•	•	•	•	•	•	•	–	•	•	–	•	•	74
S-Force	172 x 160 x 51	6300 TD	ja	■	•	•	•	•	•	•	•	•	•	•	–	•	–	75
S-Panther	Ø 172 x 51	6300 N	ja	■	•	•	•	•	•	•	•	•	•	•	•	•	–	76
S-Panther	Ø 172 x 51	6300 NTD	ja	■	•	•	•	•	•	•	•	•	•	•	–	•	–	77
S-Force	Ø 172 x 51	6300	ja	■	•	•	•	•	•	•	•	–	•	•	–	•	–	78
S-Force	Ø 172 x 51	6300 TD	ja	■	•	•	•	•	•	•	•	•	•	•	–	•	–	79
S-Force	Ø 172 x 51	DV 6300 TD	ja	■	•	•	•	•	•	•	•	•	•	•	–	•	–	80
S-Force	Ø 200 x 51	2200 FTD	ja	■	•	•	•	•	•	•	•	•	•	•	–	•	–	81
	☐ 225 x 80	K1G 200	ja	■	•	•	•	•	–	•	•	•	•	–	–	•	–	82
	☐ 225 x 89	K3G 200	ja	■	•	•	•	•	–	•	•	•	•	–	–	•	–	84

Subject to alterations

– not yet available ▫ Sleeve bearings
• Available ■ Ball bearings

Please note that these special versions are not possible for all voltages and speeds, and not in all combinations. The special versions are designed for specific customers and projects. As a rule, they are not available off the shelf and are based on minimum quantities.

Please consult your customer support representative about the feasibility of your special variant.

ebmpapst

Max. **4.6** m³/h

DC axial fans

☐ 25 x 8 mm

- **Material:** Housing: GRP[1)] (PBT)
  Impeller: GRP[1)] (PA)
- **Direction of air flow:** Exhaust over struts
- **Direction of rotation:** Counterclockwise, looking towards rotor
- **Connection:** Via single wires AWG 28, TR 64
- **Weight:** 5 g

- **Possible special versions:**
  (See chapter DC fans - specials)
  - Speed signal
  - Moisture protection

1) Fiberglass-reinforced plastic

Series 250 **Nominal data**	Air flow	Air flow	**Nominal voltage**	Voltage range	Sound pressure level	Sound power level	Sintec sleeve bearings Ball bearings	Power consumption	Nominal speed	Temperature range	Service life L_{10} (20 °C) ebm-papst standard Service life L_{10} (60 °C) ebm-papst standard	Life expectancy L_{10IPC} (40 °C) see page 17	Curve
Type	**m³/h**	**cfm**	**VDC**	**VDC**	**dB(A)**	**Bel(A)**	**□ / ■**	**Watts**	**rpm⁻¹**	**°C**	**Hours**	**Hours**	
255 M	2.3	1.2	**5**	4.5...5.5	5	< 3	□	0.2	6 500	-10...+70	45 000 / 17 500	47 500	①
255 N	3.5	1.9	**5**	4.5...5.5	16	< 3	□	0.4	9 600	-10...+70	40 000 / 15 000	42 500	②
255 H	4.6	2.6	**5**	4.5...5.5	23	4.4	□	0.6	12 000	-10...+55	35 000 / 15 000*	37 500	③
252 N	3.4	1.9	**12**	10...14	15	< 3	□	0.5	9 000	-10...+70	40 000 / 15 000	42 500	②
252 H	4.6	2.6	**12**	10...14	23	4.4	□	0.7	12 000	-10...+55	35 000 / 15 000*	37 500	③

Subject to change

* at 55 °C

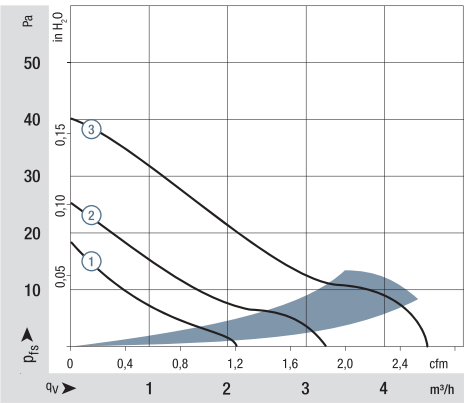

Air performance measured as per: ISO 5801.
Installation category A, without accidental contact.
Noise: Total sound power level L_{WA} ISO 103002 measured on a hemisphere with a radius of 2 m.
Sound pressure level L_{pA} measured at 1 m distance from fan axis.
The values given are applicable only under the specified measuring conditions and may differ depending on the installation conditions.
In the event of deviation from the standard configuration, the parameters must be checked after installation!
For detailed information see http://www.ebmpapst.com/general conditions

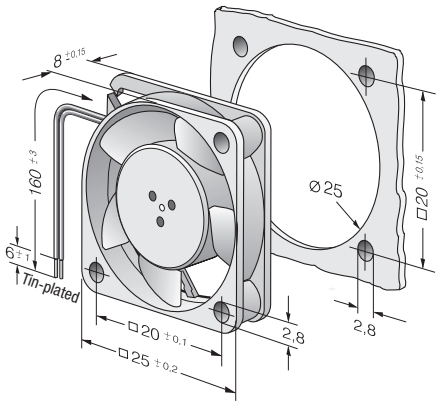

Max. 9 m³/h

DC axial fans

☐ 40 x 10 mm

- **Material:** Housing: GRP[1)] (PBT)
  Impeller: GRP[1)] (PA)
- **Direction of air flow:** Exhaust over struts
- **Direction of rotation:** Counterclockwise, looking towards rotor
- **Connection:** Via single wires AWG 28, TR 64
- **Highlights:** Some models are suitable for use at high ambient temperatures
- **Weight:** 17 g

- **Possible special versions:**
  (See chapter DC fans - specials)
  - Speed signal
  - Go / NoGo alarm
  - Moisture protection

1) Fiberglass-reinforced plastic

Series 400 F **Nominal data**	Air flow	Air flow	**Nominal voltage**	Voltage range	Sound pressure level	Sound power level	Sintec sleeve bearings Ball bearings	Power consumption	Nominal speed	Temperature range	Service life L_{10} (20 °C) ebm-papst standard Service life L_{10} (60 °C) ebm-papst standard	Life expectancy L_{10IPC} (40 °C) see page 17	Curve
Type	**m³/h**	**cfm**	**VDC**	**VDC**	**dB(A)**	**Bel(A)**	**□/■**	**Watts**	**rpm⁻¹**	**°C**	**Hours**	**Hours**	
405 F	8	4.7	**5**	4.5...5.5	22.1	4.4	□	0.7	5 400	-20...+70	45 000 / 17 500	47 500	②
405 FH	9	5.3	**5**	4.5...5.5	26.0	4.6	□	0.9	6 000	-20...+70	45 000 / 17 500	47 500	③
412 FM	6	3.5	**12**	10...14	17.0	3.8	□	0.5	4 300	-20...+70	45 000 / 17 500	47 500	①
412 F	8	4.7	**12**	10...14	22.1	4.4	□	0.7	5 400	-20...+70	45 000 / 17 500	47 500	②
412 FH	9	5.3	**12**	10...14	26.0	4.6	□	0.8	6 000	-20...+70	45 000 / 17 500	47 500	③
414 F	8	4.7	**24**	20...28	22.1	4.4	□	0.8	5 400	-20...+70	45 000 / 17 500	47 500	②
414 FH	9	5.3	**24**	21.6...26.4	26.0	4.4	□	0.9	6 000	-20...+70	45 000 / 17 500	47 500	③
Model with temperature range up to +85 °C.													
412 FM-074	6	3.5	**12**	10...14	17.0	3.8	□	0.4	4 300	-20...+85	45 000 / 17 500	47 500	①
412 F-130	8	4.7	**12**	10...14	22.1	4.4	□	0.6	5 400	-20...+85	45 000 / 17 500	47 500	②
412 FH-132	9	5.3	**12**	10...14	26.0	4.6	□	0.8	6 000	-20...+85	45 000 / 17 500	47 500	③

Subject to change

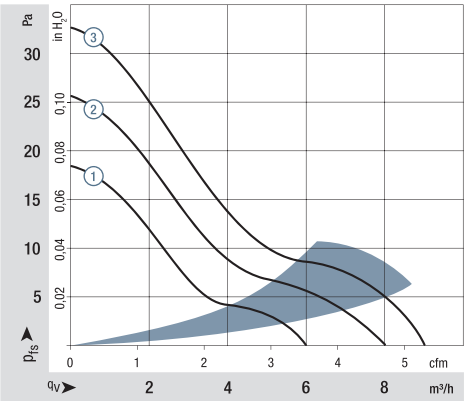

Air performance measured according to: ISO 5801.
Installation category A, without contact protection.
Noise: Total sound power level L_{WA} ISO 103002 measured on a hemisphere with a radius of 2 m.
Sound pressure level L_{pA} measured at 1 m distance from fan axis.
The values given are applicable only under the specified measuring conditions and may differ depending on the installation conditions.
In the event of deviation from the standard configuration, the parameters must be checked after installation!
For detailed information see http://www.ebmpapst.com/general conditions

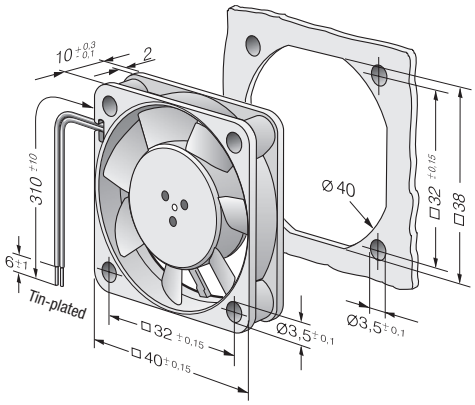

Finger guards from p. 242

ebmpapst

Max. 13.5 m³/h

DC axial fans

☐ 40 x 20 mm

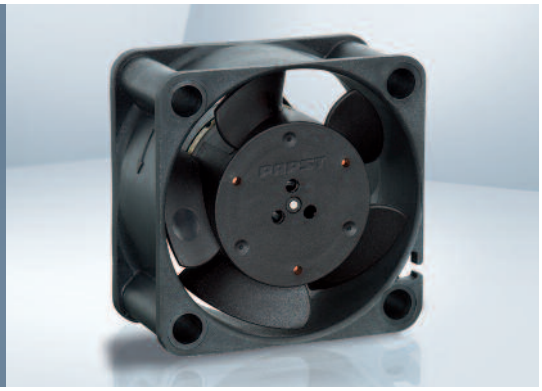

- **Material:** Housing: GRP[1)] (PBT)
  Impeller: GRP[1)] (PA)
- **Direction of air flow:** Exhaust over struts
- **Direction of rotation:** Counterclockwise, looking towards rotor
- **Connection:** Via single wires AWG 28, TR 64
- **Highlights:** Some models are suitable for use at high ambient temperatures
- **Weight:** 27 g

- **Possible special versions:**
  (See chapter DC fans - specials)
  - Speed signal
  - Go / NoGo alarm
  - PWM control input
  - Moisture protection

1) Fiberglass-reinforced plastic

Series 400 **Nominal data**	Air flow	Air flow	**Nominal voltage**	Voltage range	Sound pressure level	Sound power level	Sintec sleeve bearings Ball bearings	Power consumption	Nominal speed	Temperature range	Service life L_{10} (20 °C) ebm-papst standard Service life L_{10} (60 °C) ebm-papst standard	Life expectancy L_{10}IPC (40 °C) see page 17	Curve
Type	**m³/h**	**cfm**	**VDC**	**VDC**	**dB(A)**	**Bel(A)**	☐ / ■	**Watts**	**rpm⁻¹**	**°C**	**Hours**	**Hours**	
405	10.0	5.9	**5**	4.5...5.5	18	3.8	■	0.9	6 000	-20...+70	50 000 / 20 000	52 500	①
412	10.0	5.9	**12**	10...14	18	3.8	■	0.8	6 000	-20...+70	50 000 / 20 000	52 500	①
412 H	13.5	7.9	**12**	10...14	29	4.7	■	1.6	8 100	-20...+60	45 000 / 17 500	47 500	②
414	10.0	5.9	**24**	20...28	18	3.8	■	1.0	6 000	-20...+70	50 000 / 20 000	52 500	①
414 H	13.5	7.9	**24**	20...26.5	29	4.7	■	1.7	8 100	-20...+60	45 000 / 17 500	47 500	②
Model with temperature range up to +85 °C.													
412-099	10.0	5.9	**12**	10...14	18	3.8	■	0.8	6 000	-20...+85	50 000 / 20 000	52 500	①

Subject to change

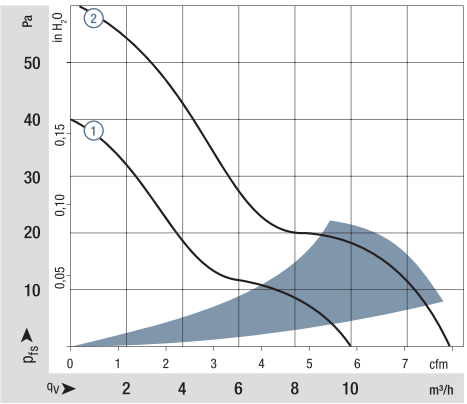

Air performance measured according to: ISO 5801.
Installation category A, without contact protection.
Noise: Total sound power level L_{WA} ISO 103002 measured on a hemisphere with a radius of 2 m.
Sound pressure level L_{pA} measured at 1 m distance from fan axis.
The values given are applicable only under the specified measuring conditions and may differ depending on the installation conditions.
In the event of deviation from the standard configuration, the parameters must be checked after installation!
For detailed information see http://www.ebmpapst.com/general conditions

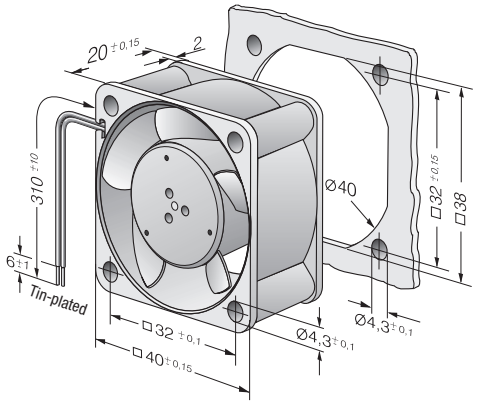

Max. 38 m³/h

DC axial fans

☐ 40 x 28 mm

- **Material:** Housing: GRP[1)] (PBT)
  Impeller: GRP[1)] (PA)
- **Direction of air flow:** Exhaust over struts
- **Direction of rotation:** Counterclockwise, looking towards rotor
- **Connection:** Via single wires AWG 28, UL 1061
- **Weight:** 45 g

- **Possible special versions:**
  (See chapter DC fans - specials)
  - Speed signal
  - Go / NoGo alarm
  - External temperature sensor
  - PWM control input
  - Moisture protection
  - Salt spray protection

1) Fiberglass-reinforced plastic

Series 420 J **Nominal data**	Air flow	Air flow	**Nominal voltage**	Voltage range	Sound pressure level	Sound power level	Sintec sleeve bearings Ball bearings	Power consumption	Nominal speed	Temperature range	Service life L_{10} (40 °C) ebm-papst standard Service life L_{10} (T_{max}) ebm-papst standard	Life expectancy L_{10IPC} (40 °C) see page 17	Curve
Type	**m³/h**	**cfm**	**VDC**	**VDC**	**dB(A)**	**Bel(A)**	**□/■**	**Watts**	**rpm⁻¹**	**°C**	**Hours**	**Hours**	
422 JM	24	14.2	**12**	8...13.8	42	5.5	■	2.4	11 400	-20...+70	75 000 / 37 500	127 500	①
422 JN	31	18.3	**12**	8...13.8	48	6.0	■	4.1	14 250	-20...+70	67 500 / 35 000	115 000	②
422 JH	38	22.4	**12**	8...13.8	54	6.6	■	6.9	17 250	-20...+70	60 000 / 30 000	102 500	③
424 JM	24	14.2	**24**	16...28	42	5.5	■	2.7	11 400	-20...+70	75 000 / 37 500	127 500	①
424 JN	31	18.3	**24**	16...28	48	6.0	■	4.3	14 250	-20...+70	67 500 / 35 000	115 000	②
424 JH	38	22.4	**24**	16...26.4	54	6.6	■	6.9	17 250	-20...+65	60 000 / 32 500	102 500	③

Subject to change

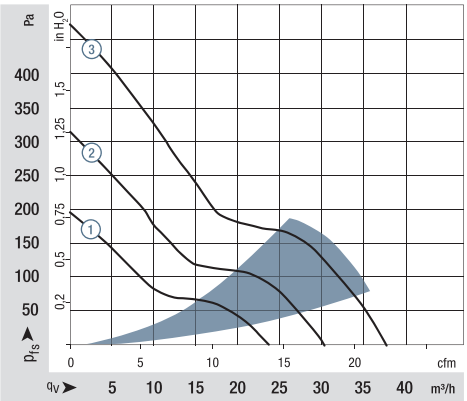

Air performance measured according to: ISO 5801.
Installation category A, without contact protection.
Noise: Total sound power level L_{WA} ISO 103002 measured on a hemisphere with a radius of 2 m.
Sound pressure level L_{pA} measured at 1 m distance from fan axis.
The values given are applicable only under the specified measuring conditions and may differ depending on the installation conditions.
In the event of deviation from the standard configuration, the parameters must be checked after installation!
For detailed information see http://www.ebmpapst.com/general conditions

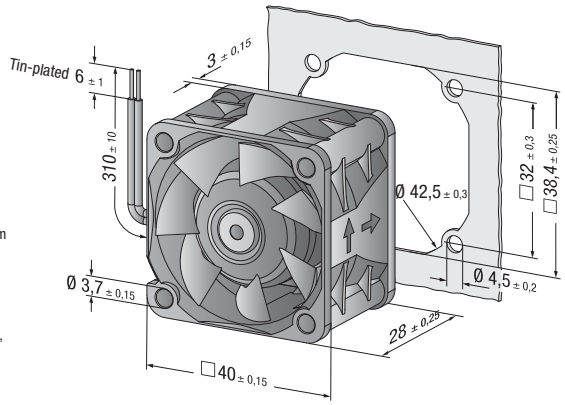

Finger guards from p. 242

ebmpapst

Max. 20 m³/h

DC axial fans

☐ 50 x 15 mm

- **Material:** Housing: GRP[1)] (PBT)
  Impeller: GRP[1)] (PA)
- **Direction of air flow:** Exhaust over struts
- **Direction of rotation:** Counterclockwise, looking towards rotor
- **Connection:** Via single wires AWG 28, TR 64
- **Highlights:** Some models are suitable for use at high ambient temperatures
- **Weight:** 27 g

- **Possible special versions:**
  (See chapter DC fans - specials)
  - Speed signal
  - Go / NoGo alarm
  - PWM control input
  - Moisture protection

1) Fiberglass-reinforced plastic

Series 500 F **Nominal data**	Air flow	Air flow	**Nominal voltage**	Voltage range	Sound pressure level	Sound power level	Sintec sleeve bearings Ball bearings	Power consumption	Nominal speed	Temperature range	Service life L_{10} (20 °C) ebm-papst standard Service life L_{10} (60 °C) ebm-papst standard	Life expectancy L_{10IPC} (40 °C) see page 17	Curve
Type	**m³/h**	**cfm**	**VDC**	**VDC**	**dB(A)**	**Bel(A)**	**□ / ■**	**Watts**	**rpm⁻¹**	**°C**	**Hours**	**Hours**	
512 F	20	11.8	**12**	10.8...13.2	30	4.5	■	0.8	5 000	-20...+70	50 000 / 20 000	52 500	②
514 F	20	11.8	**24**	21.6...26.4	30	4.5	■	0.9	5 000	-20...+70	50 000 / 20 000	52 500	②
Model with temperature range up to +85 °C.													
512 FL-547	11	6.5	**12**	10.2...13.8	18	3.7	■	0.4	3 000	-20...+85	50 000 / 20 000	52 500	①
512 F-532	20	11.8	**12**	10.8...13.2	30	4.5	■	0.9	5 000	-20...+85	50 000 / 20 000	52 500	②

Subject to change

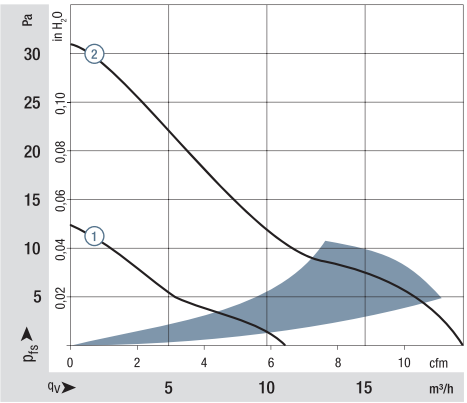

Air performance measured according to: ISO 5801.
Installation category A, without contact protection.
Noise: Total sound power level L_{WA} ISO 103002 measured on a hemisphere with a radius of 2 m.
Sound pressure level L_{pA} measured at 1 m distance from fan axis.
The values given are applicable only under the specified measuring conditions and may differ depending on the installation conditions.
In the event of deviation from the standard configuration, the parameters must be checked after installation!
For detailed information see
http://www.ebmpapst.com/general conditions

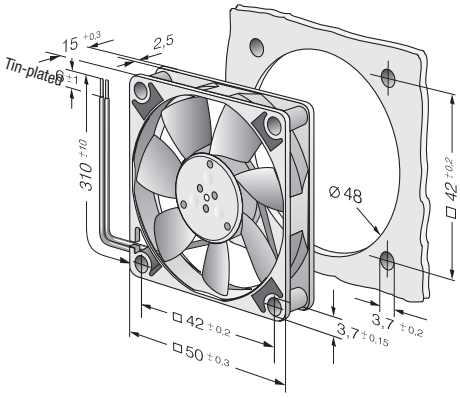

Max. 33 m³/h

DC axial fans

☐ 60 x 15 mm

- **Material:** Housing: GRP[1)] (PBT)
  Impeller: GRP[1)] (PA)
- **Direction of air flow:** Exhaust over struts
- **Direction of rotation:** Counterclockwise, looking towards rotor
- **Connection:** Via single wires AWG 28, TR 64
- **Highlights:** Some models are suitable for use at high ambient temperatures
- **Weight:** 30 g

- **Possible special versions:**
  (See chapter DC fans - specials)
  - Speed signal
  - Go / NoGo alarm
  - PWM control input
  - Moisture protection

1) Fiberglass-reinforced plastic

Series 600 F **Nominal data**	Air flow	Air flow	**Nominal voltage**	Voltage range	Sound pressure level	Sound power level	Sintec sleeve bearings Ball bearings	Power consumption	Nominal speed	Temperature range	Service life L_{10} (20 °C) ebm-papst standard Service life L_{10} (60 °C) ebm-papst standard	Life expectancy L_{10IPC} (40 °C) see page 17	Curve
Type	**m³/h**	**cfm**	**VDC**	**VDC**	**dB(A)**	**Bel(A)**	**□/■**	**Watts**	**rpm⁻¹**	**°C**	**Hours**	**Hours**	
605 F	29	17.1	**5**	4.5...5.2	27	4.4	■	1.1	4 000	-20...+50	50 000 / 20 000	52 500	②
612 FL	19	11.2	**12**	11.5...13.2	16	3.6	■	0.4	2 650	-20...+70	50 000 / 20 000	52 500	①
612 F	29	17.1	**12**	10.8...13.2	27	4.4	■	1.0	3 900	-20...+70	50 000 / 20 000	52 500	②
612 FH	33	19.4	**12**	10.0...13.2	31	4.8	■	1.5	4 500	-20...+60	45 000 / 17 500	47 500	③
614 F	29	17.1	**24**	21.6...26.4	27	4.4	■	1.1	3 900	-20...+70	50 000 / 20 000	52 500	②
614 F/39 H-691	33	19.4	**24**	16...28	31	4.8	■	1.4	4 500	-20...+60	45 000 / 17 500	47 500	③
Model with temperature range up to +80 / 85 °C.													
612 FL-680	19	11.2	**12**	11.5...14	16	3.6	■	0.5	2 650	-20...+85	50 000 / 20 000	52 500	①
612 F-637	29	17.1	**12**	10.8...12.6	27	4.4	■	1.0	3 900	-20...+80	50 000 / 20 000	52 500	②

Subject to change

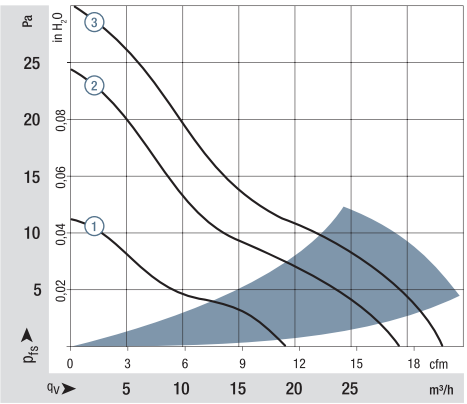

Air performance measured according to: ISO 5801.
Installation category A, without contact protection.
Noise: Total sound power level L_{WA} ISO 103002 measured on a hemisphere with a radius of 2 m.
Sound pressure level L_{pA} measured at 1 m distance from fan axis.
The values given are applicable only under the specified measuring conditions and may differ depending on the installation conditions.
In the event of deviation from the standard configuration, the parameters must be checked after installation!
For detailed information see http://www.ebmpapst.com/general conditions

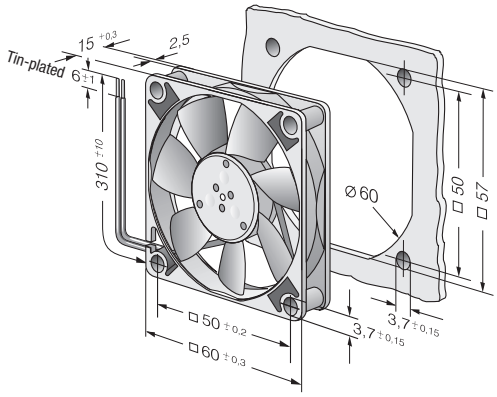

Finger guards from p. 242

ebmpapst

Max. 67 m³/h

DC axial fans

☐ 60 x 25 mm

- **Material:** Housing: GRP[1)] (PBT)
  Impeller: GRP[1)] (PA)
- **Direction of air flow:** Exhaust over struts
- **Direction of rotation:** Clockwise, looking towards rotor
- **Connection:** Via single wires AWG 22, TR 64
- **Highlights:** Very low-noise motor
- **Weight:** 85 g

- **Possible special versions:**
  (See chapter DC fans - specials)
  - Speed signal
  - Go / NoGo alarm
  - Alarm with speed limit
  - External temperature sensor
  - Internal temperature sensor
  - PWM control input
  - Analog control input
  - Moisture protection

1) Fiberglass-reinforced plastic

Series 620 **Nominal data**	Air flow	Air flow	**Nominal voltage**	Voltage range	Sound pressure level	Sound power level	Sintec sleeve bearings Ball bearings	Power consumption	Nominal speed	Temperature range	Service life L_{10} (40 °C) ebm-papst standard Service life L_{10} (T_{max}) ebm-papst standard	Life expectancy L_{10IPC} (40 °C) see page 17	Curve
Type	**m³/hcfm**	**VDC**	**VDC**	**dB(A)**	**Bel(A)**	**□/■**	**Watts**	**rpm⁻¹**	**°C**	**Hours**	**Hours**		
622 L	21	12.4	**12**	8...15	20	3.7	■	0.5	3 200	-20...+85	80 000 / 20 000	135 000	①
622 M	30	17.7	**12**	8...15	29	4.3	■	1.0	4 550	-20...+75	77 500 / 30 000	130 000	②
622 N	40	23.5	**12**	8...15	35	4.7	■	1.9	6 100	-20...+70	72 500 / 35 000	122 500	③
622 H	46	27.1	**12**	8...15	39	5.1	■	2.3	6 850	-20...+70	70 000 / 35 000	117 500	④
622 HH	56	33.0	**12**	8...15	43	5.6	■	3.5	8 200	-20...+70	65 000 / 32 500	110 000	⑤
622/2 H3P	67	39.4	**12**	8...13.2	48	5.9	■	5.5	9 700	-20...+60	52 500 / 32 500	87 500	⑥
624 L	21	12.4	**24**	18...28	20	3.7	■	1.0	3 200	-20...+70	80 000 / 40 000	135 000	①
624 M	30	17.7	**24**	12...28	29	4.3	■	1.5	4 550	-20...+70	77 500 / 37 500	130 000	②
624 N	40	23.5	**24**	12...28	35	4.7	■	2.2	6 100	-20...+70	72 500 / 35 000	122 500	③
624 H	46	27.1	**24**	18...28	39	5.1	■	2.4	6 850	-20...+70	70 000 / 35 000	117 500	④
624 HH	56	33.0	**24**	18...28	43	5.6	■	3.6	8 200	-20...+70	65 000 / 32 500	110 000	⑤
624/2 H3P	67	39.4	**24**	18...28	48	5.9	■	5.6	9 700	-20...+60	52 500 / 32 500	87 500	⑥
628 HH	56	33.0	**48**	36...60	43	5.6	■	4.2	8 200	-20...+70	65 000 / 32 500	110 000	⑤

Subject to change

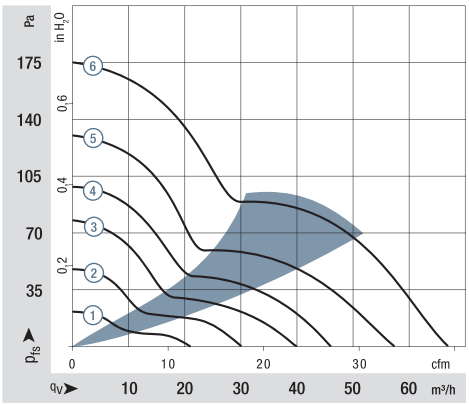

Air performance measured according to: ISO 5801.
Installation category A, without contact protection.
Noise: Total sound power level L_WA ISO 103002 measured on a hemisphere with a radius of 2 m.
Sound pressure level L_pA measured at 1 m distance from fan axis.
The values given are applicable only under the specified measuring conditions and may differ depending on the installation conditions.
In the event of deviation from the standard configuration, the parameters must be checked after installation!
For detailed information see http://www.ebmpapst.com/general conditions

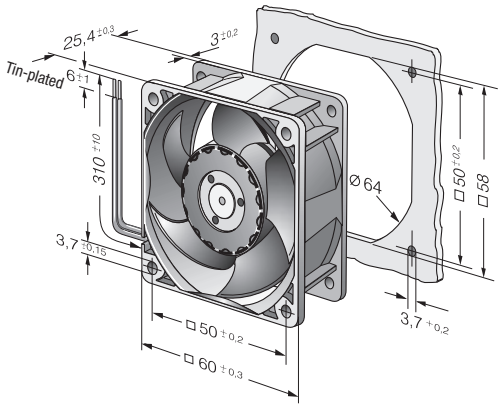

Max. 58 m³/h

DC axial fans

☐ 60 x 25 mm

- **Material:** Housing: GRP[1)] (PBT)
  Impeller: GRP[1)] (PA)
- **Direction of air flow:** Exhaust over struts
- **Direction of rotation:** Clockwise, looking towards rotor
- **Connection:** Via single wires AWG 22, TR 64
- **Highlights:** Developed for applications with demanding environmental requirements
- **Weight:** 70 g

- **Possible special versions:**
  (See chapter DC fans - specials)
  - Speed signal
  - Go / NoGo alarm
  - Alarm with speed limit
  - External temperature sensor
  - PWM control input
  - Analog control input
  - Moisture protection
  - Salt spray protection
  - Degree of protection: IP 54 / IP 68

1) Fiberglass-reinforced plastic

Series 630 **Nominal data**	Air flow	Air flow	**Nominal voltage**	Voltage range	Sound pressure level	Sound power level	Sintec sleeve bearings Ball bearings	Power consumption	Nominal speed	Temperature range	Service life L_{10} (40 °C) ebm-papst standard Service life L_{10} (T_{max}) ebm-papst standard	Life expectancy L_{10IPC} (40 °C) see page 17	Curve
Type	**m³/h**	**cfm**	**VDC**	**VDC**	**dB(A)**	**Bel(A)**	☐/■	**Watts**	**rpm⁻¹**	**°C**	**Hours**	**Hours**	
632 NU	40	23.5	**12**	6...15	33	5.2	■	1.8	5 900	-20...+70	85 000 / 42 500	142 500	①
632/2 HPU	44	25.9	**12**	10.8...13.2	35	5.4	■	1.5	6 300	-20...+70	85 000 / 42 500	142 500	②
634 NU	40	23.5	**24**	12...30	34	5.1	■	1.6	5 900	-20...+70	85 000 / 42 500	142 500	①
634 HHU	58	34.1	**24**	18...28	44	6.1	■	3.2	8 500	-20...+70	75 000 / 37 500	127 500	③
634/2 HHPU	58	34.1	**24**	18...28	44	6.1	■	3.2	8 500	-20...+70	75 000 / 37 500	127 500	③
638/2 HPU	44	25.9	**48**	40...60	35	5.4	■	1.8	6 300	-20...+70	85 000 / 42 500	142 500	②

Subject to change

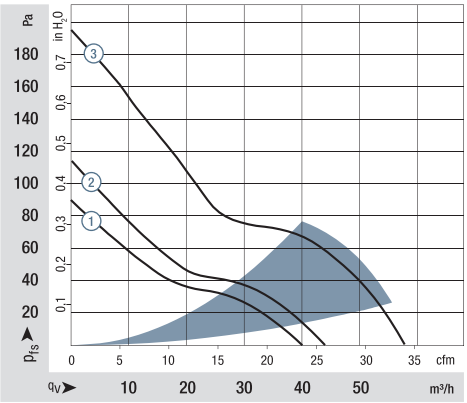

Air performance measured according to: ISO 5801.
Installation category A, without contact protection.
Noise: Total sound power level L_{WA} ISO 103002 measured on a hemisphere with a radius of 2 m.
Sound pressure level L_{pA} measured at 1 m distance from fan axis.
The values given are applicable only under the specified measuring conditions and may differ depending on the installation conditions.
In the event of deviation from the standard configuration, the parameters must be checked after installation!
For detailed information see http://www.ebmpapst.com/general conditions

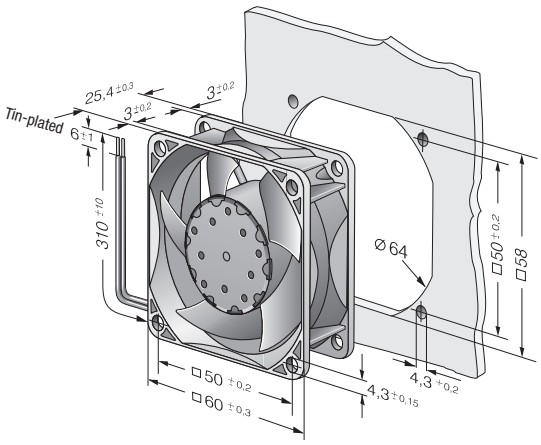

Finger guards from p. 242

ebmpapst

Max. 56 m³/h

DC axial fans

☐ 60 x 25 mm

- **Material:** Housing: GRP[1)] (PBT)
  Impeller: GRP[1)] (PA)
- **Direction of air flow:** Exhaust over struts
- **Direction of rotation:** Clockwise, looking towards rotor
- **Connection:** Via single wires AWG 22, TR 64
- **Highlights:** Some models are suitable for use at high ambient temperatures up to 85 °C.
- **Weight:** 66 g

- **Possible special versions:**
  (See chapter DC fans - specials)
  - Speed signal
  - Go / NoGo alarm
  - Moisture protection
  - Degree of protection: IP 54 / IP 68

1) Fiberglass-reinforced plastic

Series 600 N **Nominal data**	Air flow	Air flow	**Nominal voltage**	Voltage range	Sound pressure level	Sound power level	Sintec sleeve bearings / Ball bearings	Power consumption	Nominal speed	Temperature range	Service life L_{10} (40 °C) ebm-papst standard / Service life L_{10} (T_{max}) ebm-papst standard	Life expectancy L_{10IPC} (40 °C) see page 17	Curve
Type	**m³/h**	**cfm**	**VDC**	**VDC**	**dB(A)**	**Bel(A)**	☐ / ■	**Watts**	**rpm⁻¹**	**°C**	**Hours**	**Hours**	
612 NGLE	21	12.4	**12**	8...15	16	3.6	☐	0.6	2 500	-20...+85	80 000 / 27 500	135 000	①
612 NLE	21	12.4	**12**	8...15	16	3.6	■	0.4	2 500	-20...+85	80 000 / 27 500	135 000	①
612 NGMLE	25	14.7	**12**	8...15	19	3.9	☐	0.7	3 000	-20...+80	80 000 / 32 500	135 000	②
612 NMLE	25	14.7	**12**	8...15	19	3.9	■	0.4	3 000	-20...+85	80 000 / 27 500	135 000	②
612 NGME	35	20.6	**12**	8...15	28	4.6	☐	1.2	4 100	-20...+75	80 000 / 35 000	135 000	③
612 NME	35	20.6	**12**	8...15	28	4.6	■	0.8	4 100	-20...+75	80 000 / 35 000	135 000	③
612 NN	42	24.7	**12**	8...15	35	5.0	■	1.5	5 100	-20...+70	70 000 / 35 000	117 500	④
612 NH	43	25.3	**12**	8...15	37	5.3	■	1.8	5 600	-20...+70	70 000 / 35 000	117 500	⑤
612 NHH-118	56	33.0	**12**	8...15	41	5.7	■	2.9	6 800	-20...+70	60 000 / 30 000	102 500	⑥
614 NGL	21	12.4	**24**	18...28	16	3.6	☐	1.0	2 500	-20...+70	80 000 / 40 000	135 000	①
614 NL	21	12.4	**24**	18...28	16	3.6	■	0.8	2 500	-20...+70	80 000 / 40 000	135 000	①
614 NGML	25	14.7	**24**	18...28	19	3.9	☐	1.2	3 000	-20...+70	80 000 / 40 000	135 000	②
614 NML	25	14.7	**24**	18...28	19	3.9	■	1.0	3 000	-20...+70	80 000 / 40 000	135 000	②
614 NGM	35	20.6	**24**	18...28	28	4.6	☐	1.7	4 100	-20...+70	80 000 / 40 000	135 000	③
614 NM	35	20.6	**24**	18...28	28	4.6	■	1.3	4 100	-20...+70	80 000 / 40 000	135 000	③
614 NN	42	24.7	**24**	18...28	35	5.0	■	1.8	5 100	-20...+70	70 000 / 35 000	117 500	④
614 NH	43	25.3	**24**	18...26	37	5.3	■	2.1	5 600	-20...+70	70 000 / 35 000	117 500	⑤
614 NHH	56	33.0	**24**	18...26	41	5.7	■	2.9	6 850	-20...+70	60 000 / 30 000	102 500	⑥
614 NHH-119	56	33.0	**24**	18...28	41	5.7	■	2.9	6 850	-20...+70	60 000 / 30 000	102 500	⑥
618 NM	35	20.6	**48**	36...56	28	4.6	■	1.9	4 100	-20...+70	80 000 / 40 000	135 000	③
618 NN	42	24.7	**48**	36...56	35	5.0	■	2.1	5 100	-20...+65	70 000 / 40 000	117 500	④

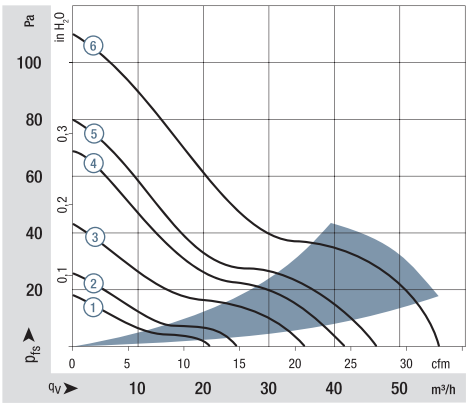

Air performance measured according to: ISO 5801.
Installation category A, without contact protection.
Noise: Total sound power level L_{WA} ISO 103002 measured on a hemisphere with a radius of 2 m.
Sound pressure level L_{pA} measured at 1 m distance from fan axis.
The values given are applicable only under the specified measuring conditions and may differ depending on the installation conditions.
In the event of deviation from the standard configuration, the parameters must be checked after installation!
For detailed information see http://www.ebmpapst.com/general conditions

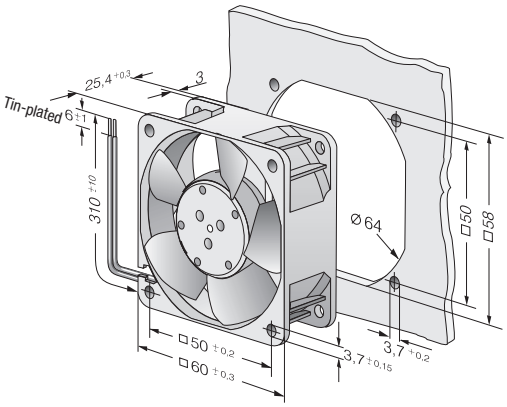

Max. 41 m³/h

DC axial fans

☐ 60 x 25 mm

- **Material:** Housing: GRP[1)] (PBT)
  Impeller: GRP[1)] (PA)
- **Direction of air flow:** Exhaust over struts
- **Direction of rotation:** Clockwise, looking towards rotor
- **Connection:** Via single wires AWG 22, TR 64
- **Highlights:** Automatic speed adjustment with temperature sensor
- **Weight:** 66 g

- **Possible special versions:**
  (See chapter DC fans - specials)
  - Speed signal
  - Go / NoGo alarm
  - External temperature sensor
  - Internal temperature sensor
  - Moisture protection

1) Fiberglass-reinforced plastic

Series 600 N VARIOFAN **Nominal data**	Type	Air flow	Air flow	**Nominal voltage**	Voltage range	Sound pressure level	Sound power level	Sintec sleeve bearings / Ball bearings	Power consumption	Nominal speed	Temperature range	Service life L_{10} (40 °C) ebm-papst standard / Service life L_{10} (T_{max}) ebm-papst standard	Life expectancy L_{10IPC} (40 °C) see page 17	Curve
		m³/h	cfm	VDC	VDC	dB(A)	Bel(A)	☐/■	Watts	rpm⁻¹	°C	Hours	Hours	
30 °C	612 NGMI	18	10.6	**12**	8...12.6	14	3.5	☐	1.3	2 150	-20...+65	80 000 / 45 000	135 000	①
55 °C		35	20.6			28	4.6		1.7	4 100				②
30 °C	612 NMI	16	9.4	**12**	8...12.6	16	3.6	■	1.0	2 400	-20...+65	80 000 / 45 000	135 000	③
55 °C		35	20.6			28	4.6		1.4	4 100				④
30 °C	612 NGNI	23	13.5	**12**	8...12.6	18	3.8	☐	1.7	2 900	-20...+65	70 000 / 40 000	117 500	⑤
55 °C		41	24.1			35	5.0		2.4	5 100				⑥
30 °C	612 NNI	23	13.5	**12**	8...12.6	18	3.8	■	1.2	2 900	-20...+65	70 000 / 40 000	117 500	⑤
55 °C		41	24.1			35	5.0		1.5	5 100				⑥
30 °C	612 NGNV	23	13.5	**12**	8...12.6	18	3.8	☐	1.7	2 900	-20...+65	70 000 / 40 000	117 500	⑤
55 °C		41	24.1			35	5.0		2.4	5 100				⑥

Subject to change

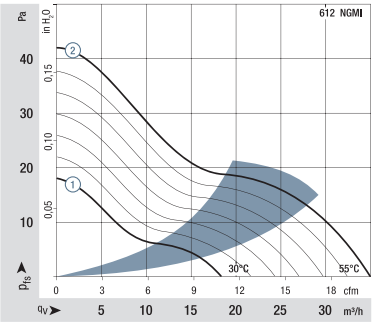

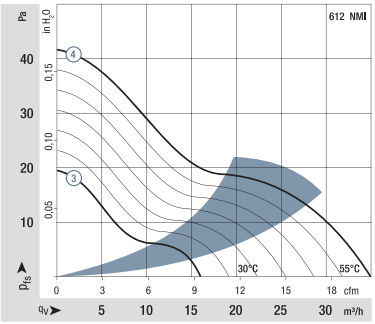

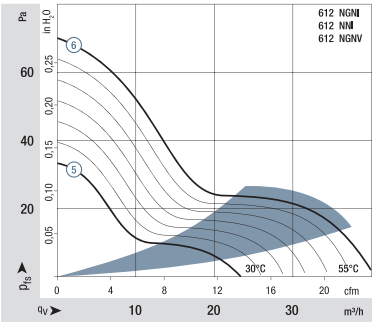

Air performance measured according to: ISO 5801. Installation category A, without contact protection.
Noise: Total sound power level L_WA ISO 103002 measured on half-sphere of 2 m; Sound pressure level L_pA measured at 1 m distance from fan axis.
The values given are applicable only under the specified measuring conditions and may differ depending on the installation conditions. In the event of deviation from the standard configuration, the parameters must be checked after installation! For detailed information see http://www.ebmpapst.com/ general conditions

V types

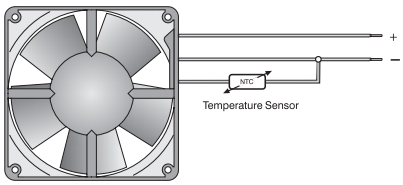

The temperature sensor for controlling the motor speed is not included in the scope of delivery.
For the temperature sensor LZ 370, see accessories.

I types

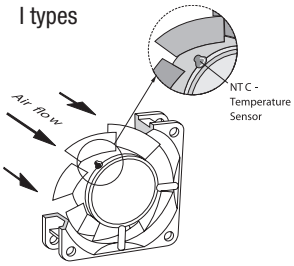

The temperature sensor (NTC resistor) for controlling the motor speed is positioned in the fan hub directly in the air flow.

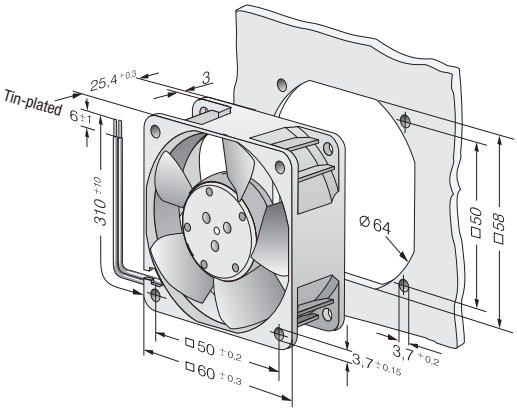

Finger guards from p. 242

ebmpapst

Max. 82 m³/h

DC axial fans

☐ 60 x 32 mm

- **Material:** Housing: GRP[1)] (PBT)
  Impeller: GRP[1)] (PA)
- **Direction of air flow:** Exhaust over struts
- **Direction of rotation:** Clockwise, looking towards rotor
- **Connection:** Via single wires AWG 24, TR 64
- **Weight:** 100 g

- **Possible special versions:**
  (See chapter DC fans - specials)
  - Speed signal
  - Go / NoGo alarm
  - Alarm with speed limit
  - External temperature sensor
  - PWM control input
  - Analog control input
  - Moisture protection

1) Fiberglass-reinforced plastic

Series 600 J **Nominal data**	Air flow	Air flow	**Nominal voltage**	Voltage range	Sound pressure level	Sound power level	Sintec sleeve bearings Ball bearings	Power consumption	Nominal speed	Temperature range	Service life L_{10} (40 °C) ebm-papst standard Service life L_{10} (T_{max}) ebm-papst standard	Life expectancy L_{10IPC} (40 °C) see page 17	Curve
Type	**m³/h**	**cfm**	**VDC**	**VDC**	**dB(A)**	**Bel(A)**	☐ / ■	**Watts**	**rpm⁻¹**	**°C**	**Hours**	**Hours**	
612 JH	70	41.1	**12**	7...13.6	53	6.4	■	7.7	11 700	-20...+70	57 500 / 27 500	97 500	①
614 JH	70	41.1	**24**	14...26.4	53	6.4	■	7.7	11 700	-20...+70	57 500 / 27 500	97 500	①
618 JH	70	41.1	**48**	36...56	53	6.4	■	7.7	11 700	-20...+70	57 500 / 27 500	97 500	①
Fan types with streamer and integrated guard grille.													
614 J/2 HHP	82	48.3	**24**	18...30	62	7.6	■	14.6	15 000	-20...+75	65 000 / 25 000	110 000	②
618 J/2 HHP	82	48.3	**48**	38...58	62	7.6	■	14.6	15 000	-20...+75	65 000 / 25 000	110 000	②

Subject to change

Rear view of types 614 J/2HHP and 618 J/2HHP

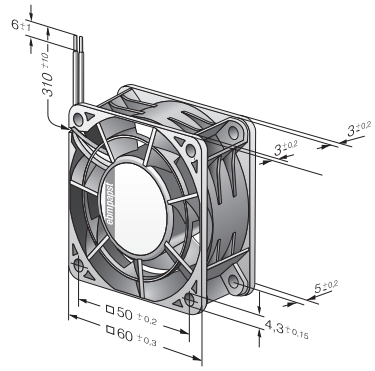

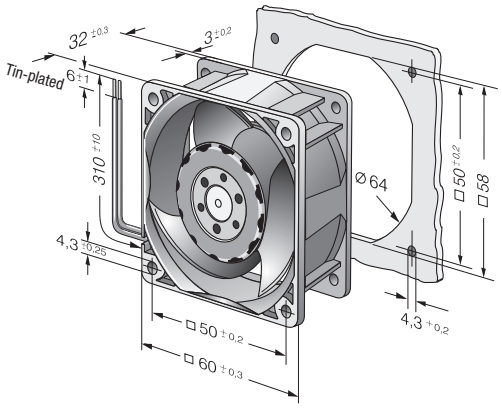

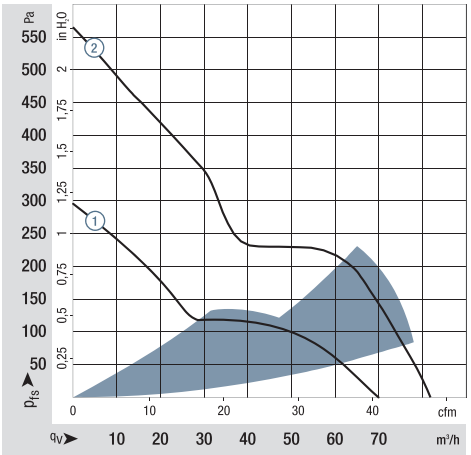

Air performance measured according to: ISO 5801.
Installation category A, without contact protection.
Noise: Total sound power level L_WA ISO 103002 measured on a hemisphere with a radius of 2 m.
Sound pressure level L_pA measured at 1 m distance from fan axis.
The values given are applicable only under the specified measuring conditions and may differ depending on the installation conditions.
In the event of deviation from the standard configuration, the parameters must be checked after installation!
For detailed information see http://www.ebmpapst.com/general conditions

Max. **44** m³/h

DC axial fans

☐ 70 x 15 mm

- **Material:** Housing: GRP[1)] (PBT)
  Impeller: GRP[1)] (PA)
- **Direction of air flow:** Exhaust over struts
- **Direction of rotation:** Counterclockwise, looking towards rotor
- **Connection:** Via single wires AWG 24 to AWG 28, TR 64
- **Weight:** 53 g

- **Possible special versions:**
  (See chapter DC fans - specials)
  - Speed signal
  - Go / NoGo alarm
  - Moisture protection

1) Fiberglass-reinforced plastic

Series 700 F **Nominal data**	Air flow	Air flow	**Nominal voltage**	Voltage range	Sound pressure level	Sound power level	Sintec sleeve bearings Ball bearings	Power consumption	Nominal speed	Temperature range	Service life L_{10} (40 °C) ebm-papst standard Service life L_{10} (T_{max}) ebm-papst standard	Life expectancy L_{10IPC} (40 °C) see page 17	Curve
Type	**m³/h**	**cfm**	**VDC**	**VDC**	**dB(A)**	**Bel(A)**	**□/■**	**Watts**	**rpm⁻¹**	**°C**	**Hours**	**Hours**	
712 F/2L-005*	28	16.5	**12**	8...13.8	25	4.7	■	0.6	3 300	-20...+70	60 000 / 30 000	102 500	①
712 F/2M-006*	36	21.2	**12**	8...13.8	32	5.0	■	1.1	4 300	-20...+70	60 000 / 30 000	102 500	②
712 F	44	25.9	**12**	8...13.8	38	5.3	■	1.7	5 300	-20...+70	60 000 / 30 000	102 500	③
714 F	44	25.9	**24**	18...28	38	5.3	■	1.5	5 300	-20...+70	60 000 / 30 000	102 500	③

Subject to change

*Version with 3-pin Molex plug housing 22-01-2035
Molex Contacts 08-50-0113

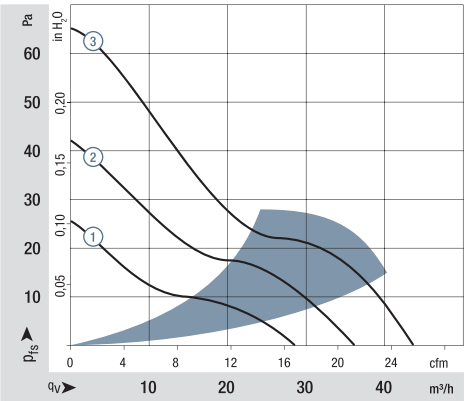

Air performance measured according to: ISO 5801.
Installation category A, without contact protection.
Noise: Total sound power level L_{WA} ISO 103002 measured on a hemisphere with a radius of 2 m.
Sound pressure level L_{pA} measured at 1 m distance from fan axis.
The values given are applicable only under the specified measuring conditions and may differ depending on the installation conditions.
In the event of deviation from the standard configuration, the parameters must be checked after installation!
For detailed information see
http://www.ebmpapst.com/general conditions

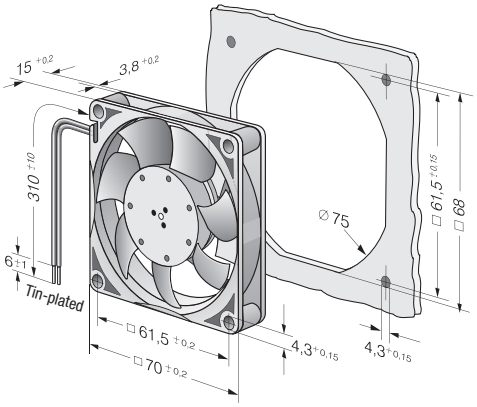

Finger guards from p. 242

ebmpapst

Max. 117 m³/h

DC axial fans

☐ 80 x 25 mm

- **Material:** Housing: GRP[1)] (PBT)
  Impeller: GRP[1)] (PA)
- **Direction of air flow:** Exhaust over struts
- **Direction of rotation:** Counterclockwise, looking towards rotor
- **Connection:** Via single wires AWG 24, TR 64
- **Highlights:** Very low-noise motor
- **Weight:** 105 g

- **Possible special versions:**
  (See chapter DC fans - specials)
  - Speed signal
  - Go / NoGo alarm
  - Alarm with speed limit
  - External temperature sensor
  - Internal temperature sensor
  - PWM control input
  - Analog control input
  - Moisture protection

1) Fiberglass-reinforced plastic

Series 8450 **Nominal data**	Air flow	Air flow	**Nominal voltage**	Voltage range	Sound pressure level	Sound power level	Sintec sleeve bearings / Ball bearings	Power consumption	Nominal speed	Temperature range	Service life L_{10} (40 °C) ebm-papst standard / Service life L_{10} (T_{max}) ebm-papst standard	Life expectancy L_{10IPC} (40 °C) see page 17	Curve
Type	**m³/h**	**cfm**	**VDC**	**VDC**	**dB(A)**	**Bel(A)**	**□ / ■**	**Watts**	**rpm⁻¹**	**°C**	**Hours**	**Hours**	
8452 GL	32	18.8	**12**	8...15	14	3.3	□	0.4	1 700	-20...75	80 000 / 35 000	135 000	①
8452 GM	58	34.1	**12**	8...15	32	4.7	□	1.3	3 100	-20...75	80 000 / 35 000	135 000	②
8452 GN	68	40.0	**12**	8...15	36	5.0	□	1.8	3 600	-20...70	70 000 / 35 000	117 500	③
Models with 25 kHz PWM control and speed signal to 4-wire specification (see page 179).													
8452/2 GHP	75	44.1	**12**	10.8...13.2	38	5.3	□	2.5	4 000	-20...70	70 000 / 35 000	117 500	④
8452/2 GHHP	83	48.8	**12**	10.8...13.2	42	5.5	□	3.5	4 400	-20...60	65 000 / 40 000	110 000	⑤
Models with 1-30 kHz PWM control and speed signal.													
8452/2 H4P	117	68.8	**12**	8...15	50	6.4	■	6.8	6 200	-20...70	60 000 / 30 000	102 500	⑥
8454/2 H4P	117	68.8	**24**	20.0...26.4	50	6.4	■	6.8	6 200	-20...70	60 000 / 30 000	102 500	⑥

Subject to change

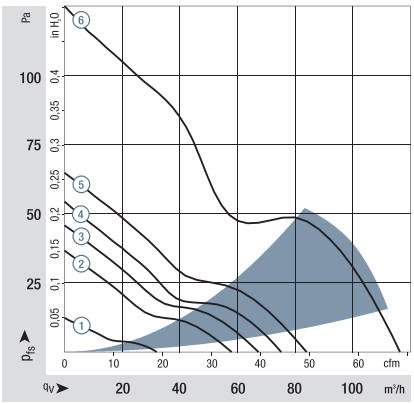

Air performance measured according to: ISO 5801.
Installation category A, without contact protection.
Noise: Total sound power level L_WA ISO 103002 measured on a hemisphere with a radius of 2 m.
Sound pressure level L_pA measured at 1 m distance from fan axis.
The values given are applicable only under the specified measuring conditions and may differ depending on the installation conditions.
In the event of deviation from the standard configuration, the parameters must be checked after installation!
For detailed information see
http://www.ebmpapst.com/general conditions

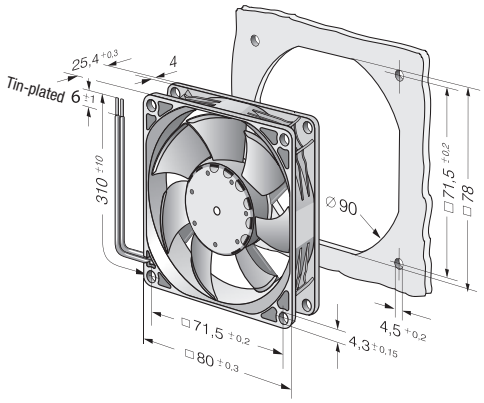

Max. 79 m³/h

DC axial fans

☐ 80 x 25 mm

- **Material:** Housing: GRP[1)] (PBT)
  Impeller: GRP[1)] (PA)
- **Direction of air flow:** Exhaust over struts
- **Direction of rotation:** Counterclockwise, looking towards rotor
- **Connection:** Via single wires AWG 24, TR 64
- **Highlights:** Some models are suitable for use at high ambient temperatures up to 85 °C.
- **Weight:** 95 g

- **Possible special versions:**
  (See chapter DC fans - specials)
  - Speed signal
  - Go / NoGo alarm
  - Alarm with speed limit
  - External temperature sensor
  - Internal temperature sensor
  - PWM control input
  - Analog control input
  - Moisture protection
  - Degree of protection: IP 54 / IP 68

1) Fiberglass-reinforced plastic

Series 8400 N **Nominal data**	Air flow	Air flow	**Nominal voltage**	Voltage range	Sound pressure level	Sound power level	Sintec sleeve bearings / Ball bearings	Power consumption	Nominal speed	Temperature range	Service life L_{10} (40 °C) ebm-papst standard / Service life L_{10} (T_{max}) ebm-papst standard	Life expectancy L_{10IPC} (40 °C) see page 17	Curve
Type	**m³/h**	**cfm**	**VDC**	**VDC**	**dB(A)**	**Bel(A)**	**□ / ■**	**Watts**	**rpm⁻¹**	**°C**	**Hours**	**Hours**	
8412 NGLE	33	19.4	**12**	8...15	12	3.5	□	0.5	1 500	-20...+85	80 000 / 27 500	135 000	①
8412 NLE	33	19.4	**12**	8...15	17	3.7	■	0.3	1 500	-20...+85	80 000 / 27 500	135 000	①
8412 NGMLE	45	26.5	**12**	8...15	19	3.9	□	0.9	2 050	-20...+80	80 000 / 32 500	135 000	②
8412 NMLE	45	26.5	**12**	8...15	21	4.0	■	0.6	2 050	-20...+85	80 000 / 27 500	135 000	②
8412 NGME	58	34.1	**12**	8...15	26	4.3	□	1.4	2 600	-20...+75	80 000 / 35 000	135 000	③
8412 NME	58	34.1	**12**	8...15	27	4.4	■	1.0	2 600	-20...+75	80 000 / 35 000	135 000	③
8412 NG	69	40.6	**12**	8...15	32	4.7	□	2.0	3 100	-20...+70	70 000 / 35 000	117 500	④
8412 N	69	40.6	**12**	8...15	32	4.7	■	1.7	3 100	-20...+70	70 000 / 35 000	117 500	④
8412 NH	79	46.5	**12**	8...13.2	37	5.0	■	2.1	3 600	-20...+70	70 000 / 35 000	117 500	⑤
8412 NH-217	79	46.5	**12**	8...15	37	5.0	■	2.5	3 600	-20...+70	70 000 / 35 000	117 500	⑤
8414 NGL	33	19.4	**24**	18...28	12	3.5	□	0.9	1 500	-20...+70	80 000 / 40 000	135 000	①
8414 NL	33	19.4	**24**	18...28	17	3.7	■	0.8	1 500	-20...+70	80 000 / 40 000	135 000	①
8414 NGML	45	26.5	**24**	18...28	19	3.9	□	1.2	2 050	-20...+70	80 000 / 40 000	135 000	②
8414 NML	45	26.5	**24**	18...28	21	4.0	■	1.1	2 050	-20...+70	80 000 / 40 000	135 000	②
8414 NGM	58	34.1	**24**	18...28	26	4.3	□	1.4	2 600	-20...+70	80 000 / 40 000	135 000	③
8414 NM	58	34.1	**24**	18...28	27	4.4	■	1.4	2 600	-20...+70	80 000 / 40 000	135 000	③
8414 NG	69	40.6	**24**	18...28	32	4.7	□	2.2	3 100	-20...+70	70 000 / 35 000	117 500	④
8414 N	69	40.6	**24**	18...28	32	4.7	■	1.8	3 100	-20...+70	70 000 / 35 000	117 500	④
8414 NH	79	46.5	**24**	18...26	37	5.0	■	2.4	3 600	-20...+70	70 000 / 35 000	117 500	⑤
8414 NH-221	79	46.5	**24**	18...28	37	5.0	■	2.2	3 600	-20...+70	70 000 / 35 000	117 500	⑤
8418 N	69	40.6	**48**	36...56	32	4.7	■	2.0	3 100	-20...+70	70 000 / 35 000	117 500	④

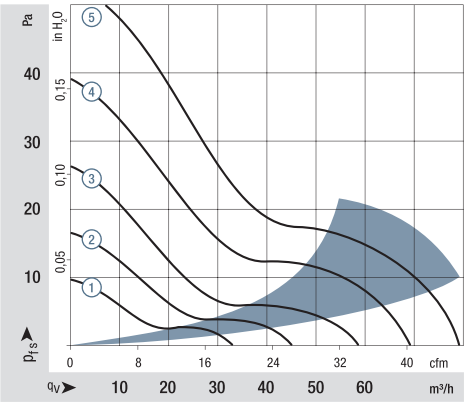

Air performance measured according to: ISO 5801.
Installation category A, without contact protection.
Noise: Total sound power level L_{WA} ISO 103002 measured on a hemisphere with a radius of 2 m.
Sound pressure level L_{pA} measured at 1 m distance from fan axis.
The values given are applicable only under the specified measuring conditions and may differ depending on the installation conditions.
In the event of deviation from the standard configuration, the parameters must be checked after installation!
For detailed information see http://www.ebmpapst.com/general conditions

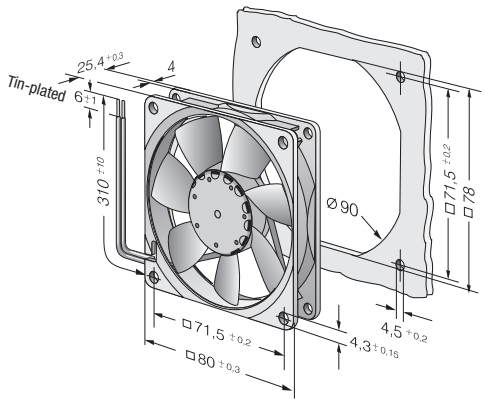

Finger guards from p. 242

ebmpapst

Max. 58 m³/h

DC axial fans

☐ 80 x 25 mm

- **Material:** Housing: GRP[1)] (PBT)
  Impeller: GRP[1)] (PA)
- **Direction of air flow:** Exhaust over struts
- **Direction of rotation:** Counterclockwise, looking towards rotor
- **Connection:** Via single wires AWG 24, TR 64
- **Highlights:** Automatic speed adjustment with temperature sensor
- **Weight:** 95 g

- **Possible special versions:**
  (See chapter DC fans - specials)
  - Speed signal
  - Go / NoGo alarm
  - External temperature sensor
  - Internal temperature sensor
  - Moisture protection

1) Fiberglass-reinforced plastic

Series 8400 N VARIOFAN **Nominal data**		Air flow	Air flow	**Nominal voltage**	Voltage range	Sound pressure level	Sound power level	Sintec sleeve bearings / Ball bearings	Power consumption	Nominal speed	Temperature range	Service life L_{10} (40 °C) ebm-papst standard / Service life L_{10} (T_{max}) ebm-papst standard	Life expectancy L_{10IPC} (40 °C) see page 17	Curve
Type		**m³/h**	**cfm**	**VDC**	**VDC**	**dB(A)**	**Bel(A)**	**□ / ■**	**Watts**	**rpm⁻¹**	**°C**	**Hours**	**Hours**	
30 °C	8412 NGLV	20	11.8	**12**	10...14	< 10	< 3	□	0.9	900	-20...+65	80 000 / 45 000	135 000	①
50 °C		33	19.4			12	3.5		1.1	1 500				②
30 °C	8412 NGMLV	27	15.9	**12**	8...14	< 10	3.0	□	1.1	1 200	-20...+65	80 000 / 45 000	135 000	③
50 °C		45	26.6			19	3.9		1.5	2 050				④
30 °C	8412 NGMI	35	20.6	**12**	8...14	< 13	3.5	□	1.4	1 600	-20...+65	80 000 / 45 000	135 000	⑤
50 °C		58	34.1			26	4.3		2.0	2 600				⑥

Subject to change

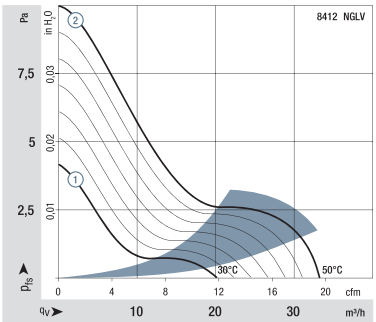

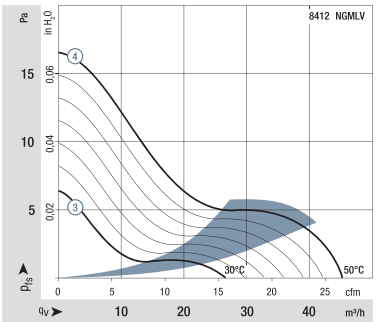

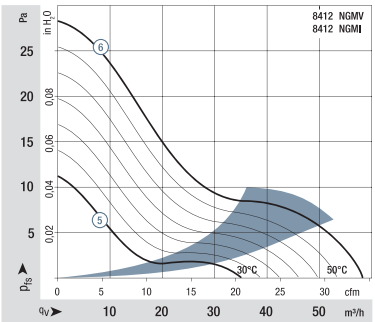

Air performance measured according to: ISO 5801. Installation category A, without contact protection.
Noise: Total sound power level L_WA ISO 103002 measured on half-sphere of 2 m; Sound pressure level L_pA measured at 1 m distance from fan axis.
The values given are applicable only under the specified measuring conditions and may differ depending on the installation conditions. In the event of deviation from the standard configuration, the parameters must be checked after installation! For detailed information see http://www.ebmpapst.com/general conditions

V types

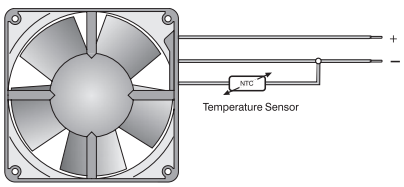

The temperature sensor for controlling the motor speed is not included in the scope of delivery.
For the temperature sensor LZ 370, see accessories.

I types

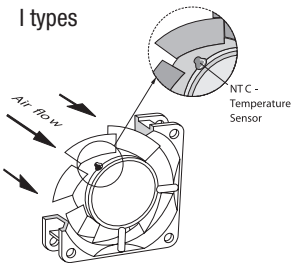

The temperature sensor (NTC resistor) for controlling the motor speed is positioned in the fan hub directly in the air flow.

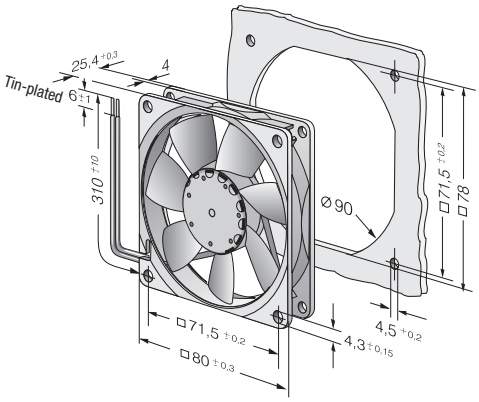

Max. 80 m³/h

DC axial fans

☐ 80 x 32 mm

- **Material:** Housing: GRP[1)] (PBT)
  Impeller: GRP[1)] (PA)
- **Direction of air flow:** Exhaust over struts
- **Direction of rotation:** Clockwise, looking towards rotor
- **Connection:** Via single wires AWG 22, TR 64
- **Weight:** 170 g

- **Possible special versions:**
  (See chapter DC fans - specials)
  - Speed signal
  - Go / NoGo alarm
  - Alarm with speed limit
  - External temperature sensor
  - Internal temperature sensor
  - PWM control input
  - Analog control input
  - Moisture protection
  - Salt spray protection
  - Degree of protection: IP 54 / IP 68

1) Fiberglass-reinforced plastic

Series 8300 **Nominal data**	Air flow	Air flow	**Nominal voltage**	Voltage range	Sound pressure level	Sound power level	Sintec sleeve bearings Ball bearings	Power consumption	Nominal speed	Temperature range	Service life L_{10} (40 °C) ebm-papst standard Service life L_{10} (T_{max}) ebm-papst standard	Life expectancy L_{10IPC} (40 °C) see page 17	Curve
Type	**m³/h**	**cfm**	**VDC**	**VDC**	**dB(A)**	**Bel(A)**	**□/■**	**Watts**	**rpm⁻¹**	**°C**	**Hours**	**Hours**	
8312 L	32	18.8	**12**	6...15	24	4.0	■	1.2	2 000	-20...+75	80 000 / 32 500	135 000	①
8312 M	48	28.3	**12**	6...15	34	5.0	■	2.2	3 000	-20...+75	70 000 / 27 500	117 500	②
8312	54	31.8	**12**	6...15	36	5.2	■	2.6	3 300	-20...+75	70 000 / 27 500	117 500	③
8312 HL	67	39.4	**12**	6...15	43	5.8	■	4.0	4 200	-20...+75	62 500 / 25 000	105 000	④
8312 H	80	47.1	**12**	6...12.6	48	6.2	■	6.4	5 000	-20...+60	55 000 / 35 000	92 500	⑤
8314 L	32	18.8	**24**	12...31.5	24	4.0	■	1.0	2 000	-20...+75	80 000 / 32 500	135 000	①
8314 M	48	28.3	**24**	12...31.5	34	5.0	■	2.3	3 000	-20...+75	70 000 / 27 500	117 500	②
8314	54	31.8	**24**	12...31.5	36	5.2	■	2.7	3 300	-20...+75	70 000 / 27 500	117 500	③
8314 HL	67	39.4	**24**	12...31.5	43	5.8	■	4.3	4 200	-20...+75	62 500 / 25 000	105 000	④
8314 H	80	47.1	**24**	12...28	48	6.2	■	6.0	5 000	-20...+75	55 000 / 20 000	92 500	⑤
8318	54	31.8	**48**	36...60	36	5.2	■	3.0	3 300	-20...+75	70 000 / 27 500	117 500	③
8318 HL	67	39.4	**48**	36...60	43	5.8	■	4.2	4 200	-20...+75	62 500 / 25 000	105 000	④
8318 H	80	47.1	**48**	36...60	48	6.2	■	6.2	5 000	-20...+65	55 000 / 30 000	92 500	⑤

Subject to change

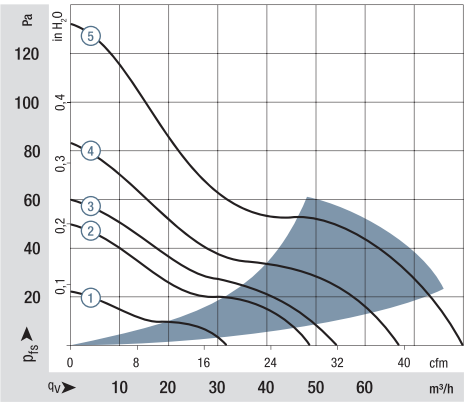

Air performance measured according to: ISO 5801.
Installation category A, without contact protection.
Noise: Total sound power level L_{WA} ISO 103002 measured on a hemisphere with a radius of 2 m.
Sound pressure level L_{pA} measured at 1 m distance from fan axis.
The values given are applicable only under the specified measuring conditions and may differ depending on the installation conditions.
In the event of deviation from the standard configuration, the parameters must be checked after installation!
For detailed information see http://www.ebmpapst.com/general conditions

Rotor protrusion max. 0.4 mm.

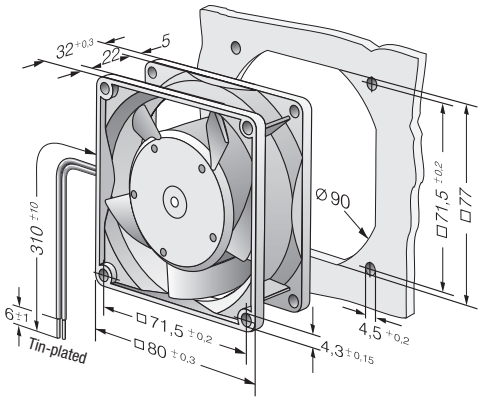

Finger guards from p. 242

ebmpapst

Max. 222 m³/h

DC axial fans

☐ 80 x 38 mm

- **Material:** Housing: GRP[1)] (PBT)
  Impeller: GRP[1)] (PA)
- **Direction of air flow:** Exhaust over struts
- **Direction of rotation:** Counterclockwise, looking towards rotor
- **Connection:** Via single wires AWG 24 (H3 and H4: AWG 22), TR 64
- **Weight:** 160 g (H3 and H4: 200 g)

- **Possible special versions:**
  (See chapter DC fans - specials)
  - Speed signal
  - Go / NoGo alarm
  - Alarm with speed limit
  - External temperature sensor
  - Internal temperature sensor
  - PWM control input
  - Analog control input
  - Moisture protection
  - Degree of protection:IP 54

1) Fiberglass-reinforced plastic

Series 8200 J **Nominal data**	Air flow	Air flow	**Nominal voltage**	Voltage range	Sound pressure level	Sound power level	Sintec sleeve bearings Ball bearings	Power consumption	Nominal speed	Temperature range	Service life L_{10} (40 °C) ebm-papst standard Service life L_{10} (T_{max}) ebm-papst standard	Life expectancy L_{10IPC} (40 °C) see page 17	Curve
Type	**m³/h**	**cfm**	**VDC**	**VDC**	**dB(A)**	**Bel(A)**	☐ / ■	**Watts**	**rpm⁻¹**	**°C**	**Hours**	**Hours**	
8212 JN	132	78	**12**	7...13.8	55	6.6	■	10	8 400	-20...+70	62 500 / 32 500	105 000	①
8212 JH3 *S-Force*	190	112	**12**	6...13.8	66	7.3	■	26*	12 000	-20...+70	55 000 / 27 500	92 500	②
8212 JH4 *S-Force*	222	131	**12**	6...13.8	71	7.8	■	39*	14 000	-20...+70	50 000 / 25 000	85 000	③
8214 JN	132	78	**24**	18...26.4	55	6.6	■	11	8 400	-20...+70	62 500 / 32 500	105 000	①
8214 JH3 *S-Force*	190	112	**24**	12...27.6	66	7.3	■	26*	12 000	-20...+70	55 000 / 27 500	92 500	②
8214 JH4 *S-Force*	222	131	**24**	12...27.6	71	7.8	■	38*	14 000	-20...+70	50 000 / 25 000	85 000	③
8218 JN	132	78	**48**	36...53	55	6.6	■	11	8 400	-20...+70	62 500 / 32 500	105 000	①
8218 JH3 *S-Force*	190	112	**48**	36...53	66	7.3	■	25*	12 000	-20...+70	55 000 / 27 500	92 500	②
8218 JH4 *S-Force*	222	131	**48**	20...58	71	7.8	■	36*	14 000	-20...+70	50 000 / 25 000	85 000	③

Subject to change

8200 JH3 and JH4 also available as standard with PWM control input and speed signal.
Speed control range from 2000 rpm⁻¹ up to maximum nominal speed. Standstill at 0% PWM, maximum speed if control cable is interrupted.
* Power consumption at free air flow. These values can be significantly higher in the operating point.

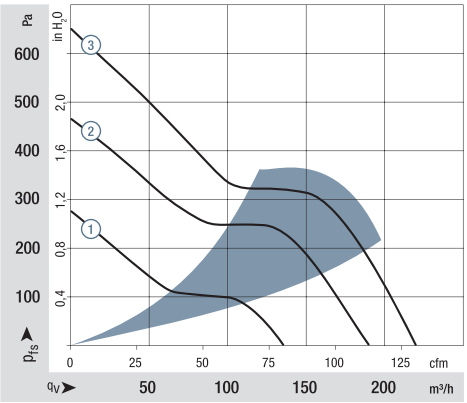

Air performance measured according to: ISO 5801.
Installation category A, without contact protection.
Noise: Total sound power level L_{WA} ISO 103002 measured on a hemisphere with a radius of 2 m.
Sound pressure level L_{pA} measured at 1 m distance from fan axis.
The values given are applicable only under the specified measuring conditions and may differ depending on the installation conditions.
In the event of deviation from the standard configuration, the parameters must be checked after installation!
For detailed information see http://www.ebmpapst.com/general conditions

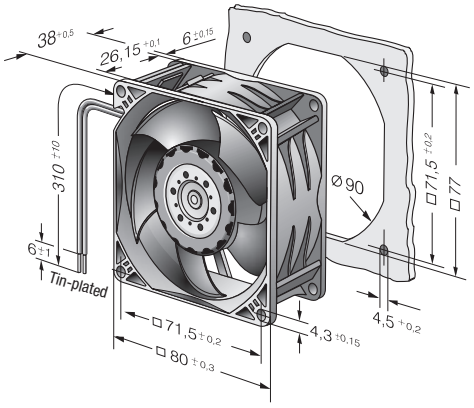

Max. 102 m³/h

DC axial fans

☐ 92 x 25 mm

- **Material:** Housing: GRP[1)] (PBT)
  Impeller: GRP[1)] (PA)
- **Direction of air flow:** Exhaust over struts
- **Direction of rotation:** Counterclockwise, looking towards rotor
- **Connection:** Via single wires AWG 24, TR 64
- **Weight:** 100 g

- **Possible special versions:**
  (See chapter DC fans - specials)
  - Speed signal
  - Go / NoGo alarm
  - Alarm with speed limit
  - External temperature sensor
  - Internal temperature sensor
  - PWM control input
  - Analog control input
  - Moisture protection
  - Degree of protection: IP 54 / IP 68

1) Fiberglass-reinforced plastic

Series 3400 N **Nominal data**	Air flow	Air flow	**Nominal voltage**	Voltage range	Sound pressure level	Sound power level	Sintec sleeve bearings / Ball bearings	Power consumption	Nominal speed	Temperature range	Service life L_{10} (40 °C) ebm-papst standard / Service life L_{10} (T_{max}) ebm-papst standard	Life expectancy L_{10IPC} (40 °C) see page 17	Curve
Type	**m³/h**	**cfm**	**VDC**	**VDC**	**dB(A)**	**Bel(A)**	☐/■	**Watts**	**rpm⁻¹**	**°C**	**Hours**	**Hours**	
3412 NGLE	61	35.9	**12**	8...15	23	4.0	☐	1.1	1 950	-20...+80	80 000 / 22 500	135 000	①
3412 NLE	61	35.9	**12**	8...15	23	4.0	■	0.8	1 950	-20...+85	80 000 / 17 500	135 000	①
3412 NGME	72	42.4	**12**	8...15	28	4.3	☐	1.6	2 300	-20...+75	75 000 / 27 500	127 500	②
3412 NME	72	42.4	**12**	8...15	28	4.3	■	1.1	2 300	-20...+75	75 000 / 27 500	127 500	②
3412 NG	84	49.4	**12**	8...15	32	4.7	☐	1.9	2 700	-20...+70	70 000 / 35 000	117 500	③
3412 N	84	49.4	**12**	8...15	32	4.7	■	1.7	2 700	-20...+70	70 000 / 35 000	117 500	③
3412 NGH	94	55.3	**12**	8...15	36	5.0	☐	2.3	3 000	-20...+70	70 000 / 35 000	117 500	④
3412 NH	94	55.3	**12**	8...15	36	5.0	■	2.1	3 000	-20...+70	70 000 / 35 000	117 500	④
3412 NGHH	102	60.0	**12**	8...13.2	39	5.1	☐	3.2	3 250	-20...+60	70 000 / 45 000	117 500	⑤
3412 NHH	102	60.0	**12**	8...13.2	39	5.1	■	2.9	3 250	-20...+60	70 000 / 45 000	117 500	⑤
3412 NHH-379	102	60.0	**12**	8...15	39	5.1	■	2.7	3 250	-20...+70	70 000 / 35 000	117 500	⑤
3414 NGL	61	35.9	**24**	18...28	23	4.0	☐	1.4	1 950	-20...+70	80 000 / 40 000	135 000	①
3414 NL	61	35.9	**24**	18...28	23	4.0	■	1.1	1 950	-20...+70	80 000 / 40 000	135 000	①
3414 NGM	72	42.4	**24**	18...28	28	4.3	☐	1.7	2 300	-20...+70	75 000 / 37 500	127 500	②
3414 NM	72	42.4	**24**	18...28	28	4.3	■	1.4	2 300	-20...+70	75 000 / 37 500	127 500	②
3414 NG	84	49.4	**24**	18...28	32	4.7	☐	2.5	2 700	-20...+70	70 000 / 35 000	117 500	③
3414 N	84	49.4	**24**	18...28	32	4.7	■	2.1	2 700	-20...+70	70 000 / 35 000	117 500	③
3414 NGH	94	55.3	**24**	18...26	36	5.0	☐	3.0	3 000	-20...+70	70 000 / 35 000	117 500	④
3414 NH	94	55.3	**24**	18...26	36	5.0	■	2.3	3 000	-20...+70	70 000 / 35 000	117 500	④
3414 NGHH	102	60.0	**24**	18...26	39	5.1	☐	3.2	3 250	-20...+70	70 000 / 35 000	117 500	⑤
3414 NGHH-389	102	60.0	**24**	18...28	39	5.1	☐	3.2	3 250	-20...+70	70 000 / 35 000	117 500	⑤
3414 NHH	102	60.0	**24**	18...26	39	5.1	■	3.1	3 250	-20...+70	70 000 / 35 000	117 500	⑤
3414 NHH-386	102	60.0	**24**	18...28	39	5.1	■	3.2	3 250	-20...+70	70 000 / 35 000	117 500	⑤
3418 N	84	49.4	**48**	36...56	32	4.7	■	2.4	2 700	-20...+70	70 000 / 35 000	117 500	③

Other 48 VDC models on request.

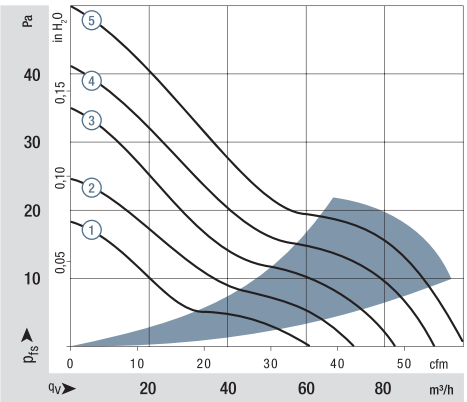

Air performance measured according to: ISO 5801.
Installation category A, without contact protection.
Noise: Total sound power level L_{WA} ISO 103002 measured on a hemisphere with a radius of 2 m.
Sound pressure level L_{pA} measured at 1 m distance from fan axis.
The values given are applicable only under the specified measuring conditions and may differ depending on the installation conditions.
In the event of deviation from the standard configuration, the parameters must be checked after installation!
For detailed information see http://www.ebmpapst.com/general conditions

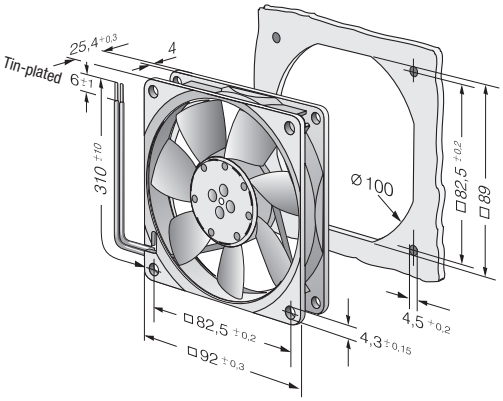

Finger guards from p. 242

ebmpapst

Max. 84 m³/h

DC axial fans

☐ 92 x 25 mm

- **Material:** Housing: GRP[1] (PBT)
  Impeller: GRP[1] (PA)
- **Direction of air flow:** Exhaust over struts
- **Direction of rotation:** Counterclockwise, looking towards rotor
- **Connection:** Via single wires AWG 24, TR 64
- **Highlights:** Automatic speed adjustment with temperature sensor
- **Weight:** 100 g

- **Possible special versions:**
  (See chapter DC fans - specials)
  - Speed signal
  - Go / NoGo alarm
  - External temperature sensor
  - Internal temperature sensor
  - Moisture protection

1) Fiberglass-reinforced plastic

Series 3400 N VARIOFAN **Nominal data**	Type	Air flow m³/h	Air flow cfm	**Nominal voltage** VDC	Voltage range VDC	Sound pressure level dB(A)	Sound power level Bel(A)	Sintec sleeve bearings ☐ / Ball bearings ■	Power consumption Watts	Nominal speed rpm⁻¹	Temperature range °C	Service life L_{10} (40 °C) ebm-papst standard Hours	Service life L_{10} (T_{max}) ebm-papst standard Hours	Life expectancy L_{10IPC} (40 °C) see page 17 Hours	Curve
30 °C	3412 NGMV	44	25.9	**12**	8...14	14	3.5	☐	1.5	1 400	-20...+65	75 000 / 42 500		127 500	①
50 °C		72	42.4			28	4.3		2.0	2 300					②
30 °C	3412 NGV	50	29.4	**12**	8...12.6	16	3.7	☐	1.6	1 600	-20...+65	75 000 / 42 500		127 500	③
50 °C		84	49.4			32	4.7		2.5	2 700					④

Subject to change

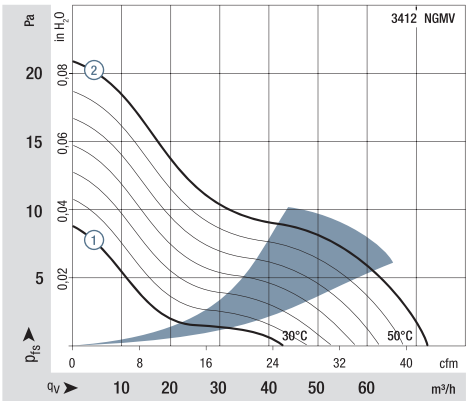

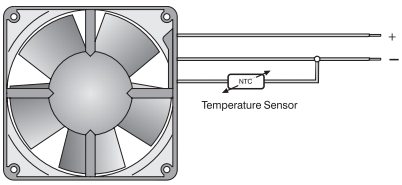

The temperature sensor for controlling the motor speed is not included in the scope of delivery.
For the temperature sensor LZ 370, see accessories.

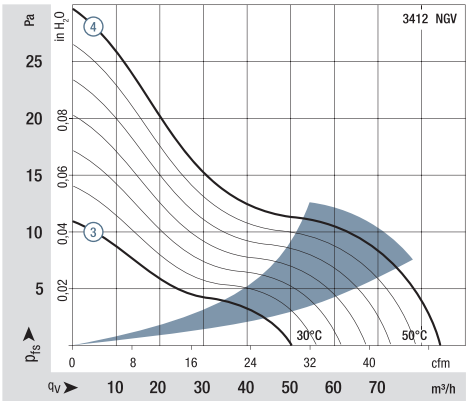

Air performance measured according to: ISO 5801.
Installation category A, without contact protection.
Noise: Total sound power level L_{WA} ISO 103002 measured on a hemisphere with a radius of 2 m.
Sound pressure level L_{pA} measured at 1 m distance from fan axis.
The values given are applicable only under the specified measuring conditions and may differ depending on the installation conditions.
In the event of deviation from the standard configuration, the parameters must be checked after installation!
For detailed information see http://www.ebmpapst.com/general conditions

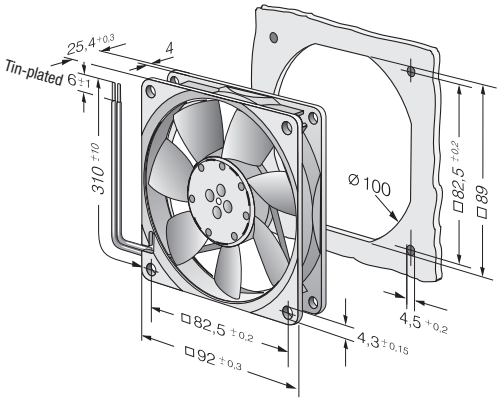

Max. 133 m³/h

DC axial fans

☐ 92 x 32 mm

- **Material:** Housing: GRP[1] (PBT)
  Impeller: GRP[1] (PA)
- **Direction of air flow:** Exhaust over struts
- **Direction of rotation:** Clockwise, looking towards rotor
- **Connection:** Via single wires AWG 24 UL 1061, TR 64
- **Weight:** 190 g

- **Possible special versions:**
  (See chapter DC fans - specials)
  - Speed signal
  - Go / NoGo alarm
  - External temperature sensor
  - Internal temperature sensor
  - PWM control input
  - Analog control input
  - Moisture protection
  - Salt spray protection
  - Degree of protection: IP 54 / IP 68

1) Fiberglass-reinforced plastic

Series 3300 N **Nominal data**	Air flow	Air flow	**Nominal voltage**	Voltage range	Sound pressure level	Sound power level	Sintec sleeve bearings / Ball bearings	Power consumption	Nominal speed	Temperature range	Service life L_{10} (40 °C) ebm-papst standard / Service life L_{10} (T_{max}) ebm-papst standard	Life expectancy L_{10IPC} (40 °C) see page 17	Curve
Type	**m³/h**	**cfm**	**VDC**	**VDC**	**dB(A)**	**Bel(A)**	□/■	**Watts**	**rpm⁻¹**	**°C**	**Hours**	**Hours**	
3312 NL	56	33	**12**	6...15	24	4.1	■	0.8	1 850	-20...+75	80 000 / 35 000	135 000	①
3312 NM	68	40	**12**	6...15	29	4.5	■	1.3	2 250	-20...+75	70 000 / 30 000	117 500	②
3312 NN	80	47	**12**	6...15	35	4.7	■	1.8	2 650	-20...+75	70 000 / 30 000	117 500	③
3312 NH	93	54	**12**	6...15	38	5.1	■	2.8	3 050	-20...+75	65 000 / 27 500	110 000	④
3312 NHH	107	63	**12**	6...15	42	5.4	■	3.4	3 450	-20...+75	57 500 / 25 000	97 500	⑤
3312 NH3	133	78	**12**	6...14	50	6.0	■	6.7	4 350	-20...+70	50 000 / 25 000	85 000	⑥
3314 NN	80	47	**24**	18...28	35	4.7	■	1.8	2 650	-20...+75	70 000 / 30 000	117 500	③
3314 NH	93	54	**24**	18...28	38	5.1	■	2.6	3 050	-20...+75	65 000 / 27 500	110 000	④
3314 NHH	107	63	**24**	18...28	42	5.4	■	3.5	3 450	-20...+75	57 500 / 25 000	97 500	⑤
3314 NH3	133	78	**24**	18...28	50	6.0	■	6.7	4 350	-20...+75	50 000 / 22 500	85 000	⑥
3318 NN	80	47	**48**	36...60	35	4.7	■	1.8	2 650	-20...+75	70 000 / 30 000	117 500	③
3318 NH	93	54	**48**	36...60	38	5.1	■	3.5	3 050	-20...+75	65 000 / 27 500	110 000	④
3318 NH3	133	78	**48**	36...58	50	6.0	■	6.5	4 350	-20...+75	50 000 / 22 500	85 000	⑥

Subject to change

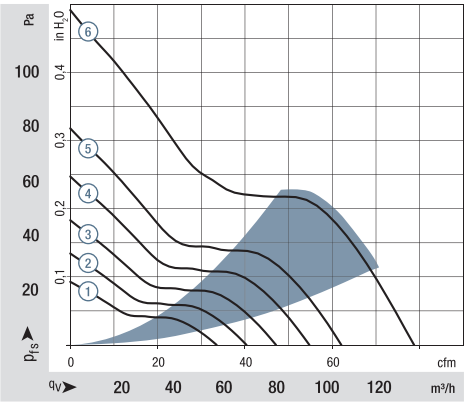

Air performance measured according to: ISO 5801.
Installation category A, without contact protection.
Noise: Total sound power level L_WA ISO 103002 measured on a hemisphere with a radius of 2 m.
Sound pressure level L_pA measured at 1 m distance from fan axis.
The values given are applicable only under the specified measuring conditions and may differ depending on the installation conditions.
In the event of deviation from the standard configuration, the parameters must be checked after installation!
For detailed information see http://www.ebmpapst.com/general conditions

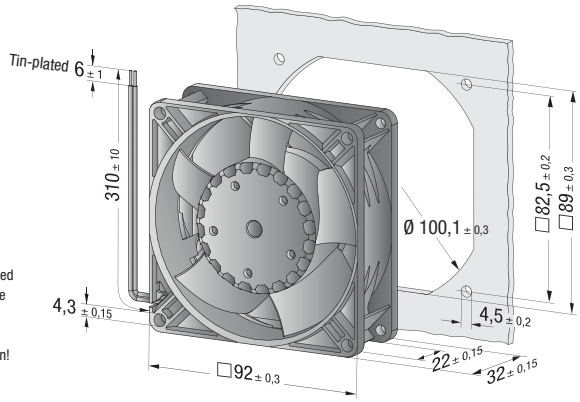

Finger guards from p. 242

ebmpapst

Max. 280 m³/h

DC axial fans

□ 92 x 38 mm

- **Material:** Housing: GRP[1)] (PBT)
  Impeller: GRP[1)] (PA)
- **Direction of air flow:** Exhaust over struts
- **Direction of rotation:** Clockwise, looking towards rotor
- **Connection:** Via single wires AWG 24 (H3 and H4: AWG 22), TR 64
- **Weight:** 240 g (H3 and H4: 280 g)

- **Possible special versions:**
  (See chapter DC fans - specials)
  - Speed signal
  - Go / NoGo alarm
  - Alarm with speed limit
  - External temperature sensor
  - Internal temperature sensor
  - PWM control input
  - Analog control input
  - Moisture protection
  - Degree of protection: IP 54 / IP 68

1) Fiberglass-reinforced plastic

Series 3200 J

Nominal data	Air flow	Air flow	Nominal voltage	Voltage range	Sound pressure level	Sound power level	Sintec sleeve bearings / Ball bearings	Power consumption*	Nominal speed	Temperature range	Service life L_{10} (40 °C) ebm-papst standard / Service life L_{10} (T_{max}) ebm-papst standard	Life expectancy L_{10IPC} (40 °C) see page 17	Curve
Type	**m³/h**	**cfm**	**VDC**	**VDC**	**dB(A)**	**Bel(A)**	□/■	**Watts**	**rpm⁻¹**	**°C**	**Hours**	**Hours**	
3212 JN	130	76.5	**12**	7...13.8	51	6.1	■	7.5	6 000	-20 ...+70	70 000 / 35 000	117 500	①
3212 JH	146	86.0	**12**	7...15	55	6.4	■	9.0	6 800	-20 ...+70	70 000 / 35 000	117 500	②
3212 JH3 *S-Force*	237	139.5	**12**	6...13.8	69	7.8	■	31.0*	11 000	-20 ...+70	65 000 / 32 500	110 000	③
3212 JH4 *S-Force*	280	164.8	**12**	6...13.8	73	8.2	■	50.0*	13 000	-20 ...+70	60 000 / 30 000	110 000	④
3214 JN	130	76.5	**24**	11...28	51	6.1	■	6.5	6 000	-20 ...+70	70 000 / 35 000	117 500	①
3214 JH	146	86.0	**24**	12...30	55	6.4	■	9.0	6 800	-20 ...+70	70 000 / 35 000	117 500	②
3214 JH3 *S-Force*	237	139.5	**24**	12...27.6	69	7.8	■	30.0*	11 000	-20 ...+70	65 000 / 32 500	110 000	③
3214 JH4 *S-Force*	280	164.8	**24**	12...27.6	73	8.2	■	50.0*	13 000	-20 ...+70	60 000 / 30 000	110 000	④
3218 JN	130	76.5	**48**	36...56	51	6.1	■	7.0	6 000	-20 ...+70	70 000 / 35 000	117 500	①
3218 JH	146	86.0	**48**	36...53	55	6.4	■	9.5	6 800	-20 ...+70	70 000 / 35 000	117 500	②
3218 JH3 *S-Force*	237	139.5	**48**	20...58.0	69	7.8	■	29.0*	11 000	-20 ...+70	65 000 / 32 500	110 000	③
3218 JH4 *S-Force*	280	164.8	**48**	20...58.0	73	8.2	■	50.0*	13 000	-20 ...+70	60 000 / 30 000	110 000	④

Subject to change

3200 JH3 and JH4 also available as standard with PWM control input and speed signal.
Speed control range from 2000 rpm⁻¹ up to maximum nominal speed. Standstill at 0% PWM, maximum speed if control cable is interrupted.
* Power consumption at free air flow. These values can be significantly higher in the operating point.

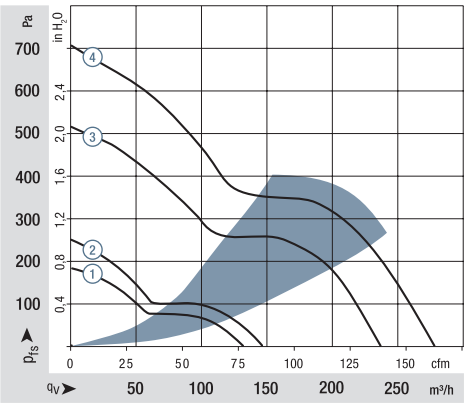

Air performance measured according to: ISO 5801.
Installation category A, without contact protection.
Noise: Total sound power level L_{WA} ISO 103002 measured on a hemisphere with a radius of 2 m.
Sound pressure level L_{pA} measured at 1 m distance from fan axis.
The values given are applicable only under the specified measuring conditions and may differ depending on the installation conditions.
In the event of deviation from the standard configuration, the parameters must be checked after installation!
For detailed information see http://www.ebmpapst.com/general conditions

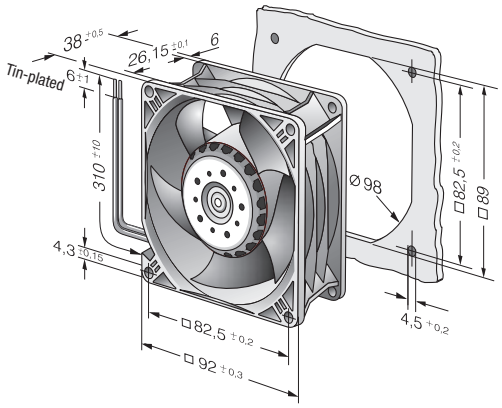

Max. 270 m³/h

S-Panther

DC axial fans

□ 92 x 38 mm

- **Material:** Housing: GRP[1)] (PBT)
  Impeller: GRP[1)] (PA)
- **Direction of air flow:** Exhaust over struts
- **Direction of rotation:** Clockwise, looking towards rotor
- **Connection:** Via single wires AWG 22, TR 64
- **Weight:** 240 g

- **Possible special versions:**
  (See chapter DC fans - specials)
  - Speed signal
  - Go / NoGo alarm
  - External temperature sensor
  - Internal temperature sensor
  - PWM control input
  - Analog control input
  - Moisture protection
  - Salt spray protection
  - Degree of protection: IP 54 / IP 68

1) Fiberglass-reinforced plastic

Series 3250 J

Nominal data Type	Air flow m³/h	Air flow cfm	**Nominal voltage** VDC	Voltage range VDC	Sound pressure level dB(A)	Sound power level Bel(A)	Sintec sleeve bearings / Ball bearings □/■	Power consumption* Watts	Nominal speed rpm⁻¹	Temperature range °C	Service life L_{10} (40 °C) ebm-papst standard / Service life L_{10} (T_{max}) ebm-papst standard Hours	Life expectancy L_{10IPC} (40 °C) see page 17 Hours	Curve
3252 J/2 H3P	270	158	**12**	7...13.2	64	7.6	■	35.0	7 450	-20...+70	85 000 / 42 500	142 500	③
3254 J/2 H3P	270	158	**24**	14...26.4	64	7.6	■	35.0	7 450	-20...+70	85 000 / 42 500	142 500	③
3258 J/2 HP**	145	85	**48**	36...56.0	46	5.8	■	7.0	4 100	-20...+70	100 000 / 50 000	170 000	①
3258 J/2 HHP	235	138	**48**	36...56.0	59	7.0	■	24.3	6 650	-20...+70	90 000 / 45 000	152 500	②
3258 J/2 H3P	270	158	**48**	36...56.0	64	7.6	■	33.6	7 450	-20...+70	85 000 / 42 500	142 500	③

Subject to change
** On request

* Power consumption at free air flow. These values can be significantly higher in the operating point.

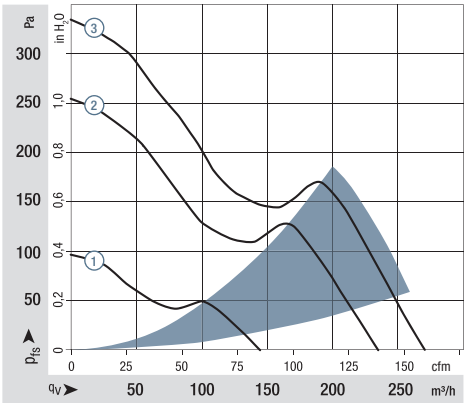

Air performance measured according to: ISO 5801.
Installation category A, without contact protection.
Noise: Total sound power level L_{WA} ISO 103002 measured on a hemisphere with a radius of 2 m.
Sound pressure level L_{pA} measured at 1 m distance from fan axis.
The values given are applicable only under the specified measuring conditions and may differ depending on the installation conditions.
In the event of deviation from the standard configuration, the parametersmust be checked after installation!
For detailed information see http://www.ebmpapst.com/general conditions

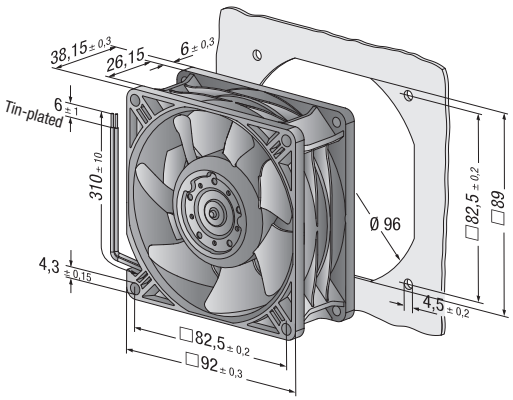

Finger guards
from p. 242

ebmpapst

Max. 170 m³/h

DC axial fans

☐ 119 x 25 mm

- **Material:** Housing: GRP[1)] (PBT)
  Impeller: GRP[1)] (PA)
- **Direction of air flow:** Exhaust over struts
- **Direction of rotation:** Counterclockwise, looking towards rotor
- **Connection:** Via single wires AWG 24, TR 64
- **Highlights:** Ball bearings and sleeve bearings available
- **Weight:** 175 g

- **Possible special versions:**
  (See chapter DC fans - specials)
  - Speed signal
  - Go / NoGo alarm
  - Alarm with speed limit
  - External temperature sensor
  - Internal temperature sensor
  - PWM control input
  - Analog control input
  - Moisture protection

1) Fiberglass-reinforced plastic

Series 4400 F **Nominal data**	Air flow	Air flow	**Nominal voltage**	Voltage range	Sound pressure level	Sound power level	Sintec sleeve bearings / Ball bearings	Power consumption	Nominal speed	Temperature range	Service life L_{10} (40 °C) ebm-papst standard / Service life L_{10} (T_{max}) ebm-papst standard	Life expectancy L_{10IPC} (40 °C) see page 17	Curve
Type	**m³/h**	**cfm**	**VDC**	**VDC**	**dB(A)**	**Bel(A)**	☐ / ■	**Watts**	**rpm⁻¹**	**°C**	**Hours**	**Hours**	
4412 FGL	94	55	**12**	7...14	26	3.9	☐	1.3	1 600	-20...+75	80 000 / 32 500	135 000	①
4412 FGML	114	67	**12**	7...12.6	32	4.3	☐	2.0	1 950	-20...+75	75 000 / 30 000	127 500	②
4412 FML	114	67	**12**	7...12.6	32	4.3	■	2.0	1 950	-20...+75	75 000 / 30 000	127 500	②
4412 FGM	140	82	**12**	7...12.6	38	4.8	☐	3.2	2 400	-20...+75	70 000 / 27 500	117 500	③
4412 FM	140	82	**12**	7...12.6	38	4.8	■	3.2	2 400	-20...+75	70 000 / 27 500	117 500	③
4412 FG	170	100	**12**	8...12.6	43	5.3	☐	5.3	2 900	-20...+60	60 000 / 37 500	102 500	④
4412 F	170	100	**12**	8...12.6	43	5.3	■	5.3	2 900	-20...+60	60 000 / 37 500	102 500	④
4414 FL	94	55	**24**	18...28	26	3.9	■	1.2	1 600	-20...+75	80 000 / 32 500	135 000	①
4414 FM	140	82	**24**	12...28	38	4.8	■	3.1	2 400	-20...+75	70 000 / 27 500	117 500	③
4414 FG	170	100	**24**	12...28	43	5.3	☐	5.0	2 900	-20...+60	60 000 / 37 500	102 500	④
4414 F	170	100	**24**	12...28	43	5.3	■	5.0	2 900	-20...+60	60 000 / 37 500	102 500	④
4418 FG	170	100	**48**	28...53	43	5.3	☐	5.4	2 900	-20...+60	60 000 / 37 500	102 500	④
4418 F	170	100	**48**	28...53	43	5.3	■	5.4	2 900	-20...+60	60 000 / 37 500	102 500	④

Subject to change

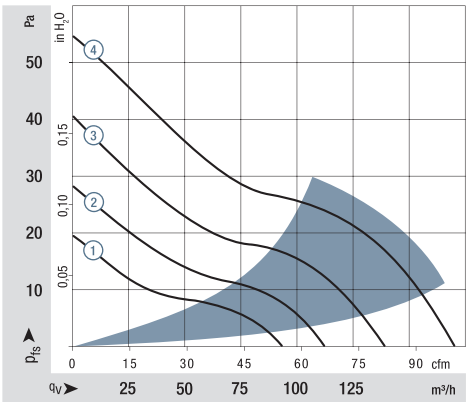

Air performance measured according to: ISO 5801.
Installation category A, without contact protection.
Noise: Total sound power level L_{WA} ISO 103002 measured on a hemisphere with a radius of 2 m.
Sound pressure level L_{pA} measured at 1 m distance from fan axis.
The values given are applicable only under the specified measuring conditions and may differ depending on the installation conditions.
In the event of deviation from the standard configuration, the parameters must be checked after installation!
For detailed information see http://www.ebmpapst.com/general conditions

Available as an option:
Fan housing with molded-in spacers

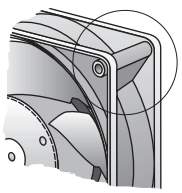

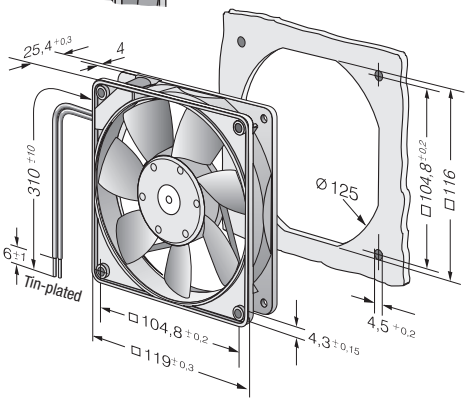

Max. 170 m³/h

DC axial fans

Ø 127 mm

- **Material:** Housing: GRP[1)] (PBT)
  Impeller: GRP[1)] (PA)
- **Direction of air flow:** Exhaust over struts
- **Direction of rotation:** Counterclockwise, looking towards rotor
- **Connection:** Via single wires AWG 24, TR 64
- **Highlights:** Ball bearings and sleeve bearings available
  Optional:
  - Reversible direction of rotation
  - Symmetrical impeller
- **Weight:** 170 g

1) Fiberglass-reinforced plastic

- **Possible special versions:**
  (See chapter DC fans - specials)
  - Speed signal
  - Go / NoGo alarm
  - External temperature sensor
  - Internal temperature sensor
  - PWM control input
  - Analog control input
  - Moisture protection
  - Reversible direction of rotation
  - Symmetrical impeller

Series 4400 F

Nominal data

	Type	Air flow m³/h	Air flow cfm	Nominal voltage VDC	Voltage range VDC	Sound pressure level dB(A)	Sound power level Bel(A)	Sintec sleeve bearings □ / Ball bearings ■	Power consumption Watts	Nominal speed rpm⁻¹	Temperature range °C	Service life L_{10} (40 °C) ebm-papst standard / Service life L_{10} (T_{max}) ebm-papst standard Hours	Life expectancy L_{10IPC} (40 °C) see page 17 Hours	Curve
NEW	4412 FGL-573	91	54	**12**	7...15	26	3.9	■	1.2	1 600	-20...+75	80 000 / 32 500	135 000	①
NEW	4412 FGML*	114	67	**12**	7...12.6	32	4.3	■	2.0	1 950	-20...+75	75 000 / 30 000	127 500	③
NEW	4412 FGM*	140	82	**12**	7...12.6	38	4.8	■	3.2	2 400	-20...+75	75 000 / 27 500	117 500	③
NEW	4412 FG*	170	100	**12**	8...12.6	43	5.3	■	5.3	2 900	-20...+60	60 000 / 37 500	102 500	④

Subject to change

* On request

Other voltage versions (24 VDC, 48 VDC), speed variations and ball bearing designs are available as additional variants.

		n rpm⁻¹	P_{ed} W	Lw_A dB(A)
①	❶	1515	1	44
①	❷	1516	1	38
①	❸	1547	1	40
①	❹	1567	1	39
②	❶	1856	2	50
②	❷	1848	2	44
②	❸	1882	2	44
②	❹	1929	2	46

		n rpm⁻¹	P_{ed} W	Lw_A dB(A)
③	❶	2225	4	51
③	❷	2235	4	50
③	❸	2304	4	51
③	❹	2369	4	52
④	❶	2670	6	59
④	❷	2685	6	59
④	❸	2783	6	56
④	❹	2869	6	57

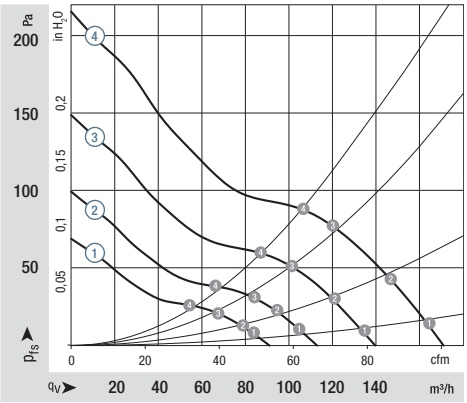

Air performance measured according to: ISO 5801.
Installation category A, without contact protection.
Noise: Total sound power level L_WA ISO 103002 measured on a hemisphere with a radius of 2 m.
Sound pressure level L_pA measured at 1 m distance from fan axis.
The values given are applicable only under the specified measuring conditions and may differ depending on the installation conditions.
In the event of deviation from the standard configuration, the parametersmust be checked after installation!
For detailed information see
http://www.ebmpapst.com/general conditions

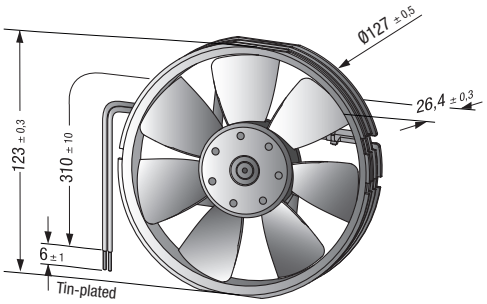

Finger guards
from p. 242

ebmpapst

Max. 225 m³/h

DC axial fans

☐ 119 x 25 mm

- **Material:** Housing: GRP[1)] (PBT)
  Impeller: GRP[1)] (PA)
- **Direction of air flow:** Exhaust over struts
- **Direction of rotation:** Counterclockwise, looking towards rotor
- **Connection:** Via single wires AWG 22, TR 64
- **Weight:** 240 g

- **Possible special versions:**
  (See chapter DC fans - specials)
  - Speed signal
  - Go / NoGo alarm
  - Alarm with speed limit
  - External temperature sensor
  - Internal temperature sensor
  - PWM control input
  - Analog control input
  - Moisture protection

1) Fiberglass-reinforced plastic

Series 4400 FN **Nominal data**	Air flow	Air flow	**Nominal voltage**	Voltage range	Sound pressure level	Sound power level	Sintec sleeve bearings Ball bearings	Power consumption	Nominal speed	Temperature range	Service life L_{10} (40 °C) ebm-papst standard Service life L_{10} (T_{max}) ebm-papst standard	Life expectancy L_{10}IPC (40 °C) see page 17	Curve
Type	**m³/h**	**cfm**	**VDC**	**VDC**	**dB(A)**	**Bel(A)**	**☐ / ■**	**Watts**	**rpm⁻¹**	**°C**	**Hours**	**Hours**	
4412 FNH	225	132	**12**	9...13.2	55	6.7	■	12	5 400	-20...+70	60 000 / 30 000	102 500	②
4414 FNN	200	118	**24**	14...28	52	6.5	■	8.3	4 850	-20...+70	60 000 / 30 000	102 500	①
4414 FNH	225	132	**24**	18...26.4	55	6.7	■	12	5 400	-20...+70	60 000 / 30 000	102 500	②
4418 FNH	225	132	**48**	36...53	55	6.7	■	12	5 400	-20...+70	60 000 / 30 000	102 500	②

Subject to change

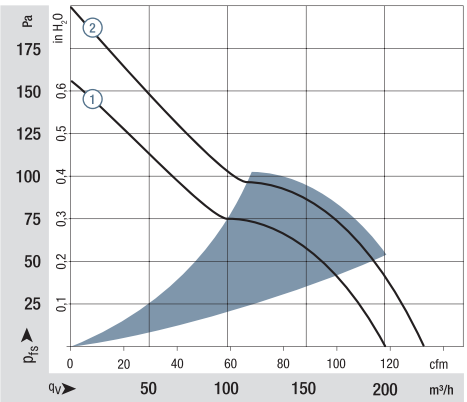

Air performance measured according to: ISO 5801.
Installation category A, without contact protection.
Noise: Total sound power level L_{WA} ISO 103002 measured on a hemisphere with a radius of 2 m.
Sound pressure level L_{pA} measured at 1 m distance from fan axis.
The values given are applicable only under the specified measuring conditions and may differ depending on the installation conditions.
In the event of deviation from the standard configuration, the parameters must be checked after installation!
For detailed information see
http://www.ebmpapst.com/general conditions

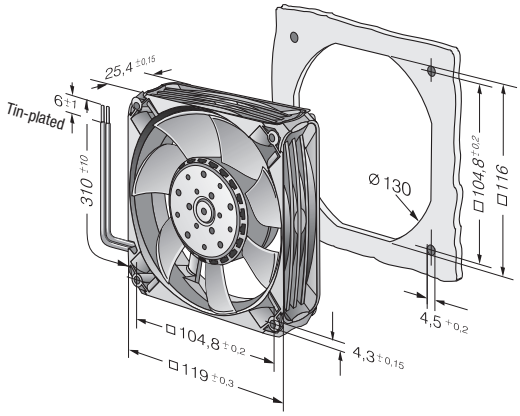

Max. 204 m³/h

DC axial fans

□ 119 x 32 mm

- **Material:** Housing: GRP[1)] (PBT)
  Impeller: GRP[1)] (PA)
- **Direction of air flow:** Exhaust over struts
- **Direction of rotation:** Clockwise, looking towards rotor
- **Connection:** Via single wires AWG 22, TR 64
- **Highlights:** Ball bearings and sleeve bearings available
- **Weight:** 220 g

- **Possible special versions:**
  (See chapter DC fans - specials)
  - Speed signal
  - Go / NoGo alarm
  - Alarm with speed limit
  - External temperature sensor
  - Internal temperature sensor
  - PWM control input
  - Analog control input
  - Moisture protection
  - Salt spray protection
  - Degree of protection: IP 54 / IP 68

1) Fiberglass-reinforced plastic

Series 4300 **Nominal data**	Air flow	Air flow	**Nominal voltage**	Voltage range	Sound pressure level	Sound power level	Sintec sleeve bearings / Ball bearings	Power consumption	Nominal speed	Temperature range	Service life L_{10} (40 °C) ebm-papst standard / Service life L_{10} (T_{max}) ebm-papst standard	Life expectancy L_{10IPC} (40 °C) see page 17	Curve
Type	**m³/h**	**cfm**	**VDC**	**VDC**	**dB(A)**	**Bel(A)**	□ / ■	**Watts**	**rpm⁻¹**	**°C**	**Hours**	**Hours**	
4312 GL	95	56	**12**	6...15	30	4.3	□	1.2	1 550	-20...+75	80 000 / 35 000	135 000	①
4312 L	95	56	**12**	6...15	30	4.3	■	1.2	1 550	-20...+75	80 000 / 35 000	135 000	①
4312 GM	140	82	**12**	6...15	39	5.3	□	3.1	2 300	-20...+75	70 000 / 30 000	117 500	②
4312 M	140	82	**12**	6...15	39	5.3	■	3.1	2 300	-20...+75	70 000 / 30 000	117 500	②
4312 G	170	100	**12**	6...15	45	5.8	□	5.0	2 800	-20...+70	62 500 / 30 000	105 000	③
4312	170	100	**12**	6...15	45	5.8	■	5.0	2 800	-20...+70	62 500 / 30 000	105 000	③
4312-179	204	120	**12**	6...13.2	51	6.4	■	9.4	3 400	-20...+65	47 500 / 27 500	80 000	⑤
4314 L	95	56	**24**	12...28	30	4.3	■	1.2	1 550	-20...+75	80 000 / 35 000	135 000	①
4314 M	140	82	**24**	12...28	39	5.3	■	2.8	2 300	-20...+75	70 000 / 30 000	117 500	②
4314 G	170	100	**24**	12...28	45	5.8	□	4.7	2 800	-20...+75	62 500 / 27 500	105 000	③
4314	170	100	**24**	12...28	45	5.8	■	5.0	2 800	-20...+75	62 500 / 27 500	105 000	③
4314-147	180	106	**24**	12...28	47	6.1	■	4.7	3 000	-20...+75	57 500 / 25 000	80 000	④
4314-180	204	120	**24**	12...26	51	6.4	■	8.5	3 400	-20...+70	45 000 / 22 500	75 000	⑤
4318 M	140	82	**48**	36...56	39	5.3	■	3.6	2 300	-20...+75	70 000 / 30 000	117 500	②
4318	170	100	**48**	36...53	45	5.8	■	5.1	2 800	-20...+75	62 500 / 27 500	105 000	③

Subject to change

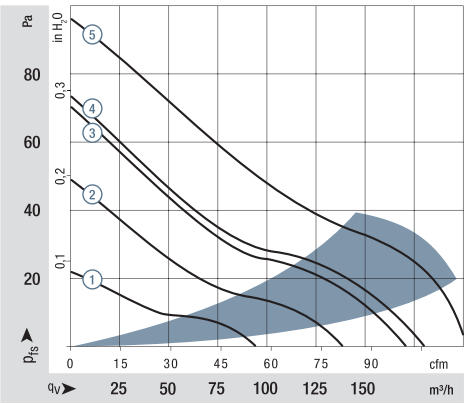

Air performance measured according to: ISO 5801.
Installation category A, without contact protection.
Noise: Total sound power level L_{WA} ISO 103002 measured on a hemisphere with a radius of 2 m.
Sound pressure level L_{pA} measured at 1 m distance from fan axis.
The values given are applicable only under the specified measuring conditions and may differ depending on the installation conditions.
In the event of deviation from the standard configuration, the parameters must be checked after installation!
For detailed information see http://www.ebmpapst.com/general conditions

Rotor protrusion max. 0.4 mm.

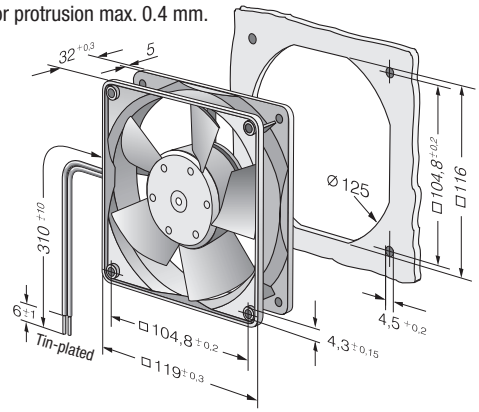

Finger guards from p. 242

ebmpapst

Max. 170 m³/h

DC axial fans

☐ 119 x 32 mm

- **Material:** Housing: GRP[1] (PBT)
  Impeller: GRP[1] (PA)
- **Direction of air flow:** Exhaust over struts
- **Direction of rotation:** Clockwise, looking towards rotor
- **Connection:** Via single wires AWG 22, TR 64
- **Highlights:** Speed automatically adjusted to cooling requirement
- **Weight:** 220 g

- **Possible special versions:**
  (See chapter DC fans - specials)
  - Speed signal
  - Go / NoGo alarm
  - Alarm with speed limit
  - External temperature sensor
  - Internal temperature sensor
  - PWM control input
  - Analog control input
  - Moisture protection

1) Fiberglass-reinforced plastic

Series 4300 VARIOFAN **Nominal data**		Air flow	Air flow	**Nominal voltage**	Voltage range	Sound pressure level	Sound power level	Sintec sleeve bearings / Ball bearings	Power consumption	Nominal speed	Temperature range	Service life L_{10} (40 °C) ebm-papst standard / Service life L_{10} (T_{max}) ebm-papst standard	Life expectancy L_{10IPC} (40 °C) see page 17	Curve
Type		**m³/h**	**cfm**	**VDC**	**VDC**	**dB(A)**	**Bel(A)**	☐ / ■	**Watts**	**rpm⁻¹**	**°C**	**Hours**	**Hours**	
25°C	4312 MT	65	38	**12**	8...15	25	3.9		1.1	1 100	-20...+65	70 000 / 40 000	117 500	①
50°C		138	81			39	5.3	■	3.3	2 300				②
25°C	4312 T	85	50	**12**	8...13.2	29	4.2		1.7	1 400	-20...+65	65 000 / 35 000	110 000	③
50°C		170	100			45	5.8	■	5.0	2 800				④
30°C	4314 T	85	50	**24**	18...32	29	4.2		1.6	1 400	-20...+65	65 000 / 35 000	110 000	③
50°C		170	100			45	5.8	■	4.8	2 800				④

Subject to change

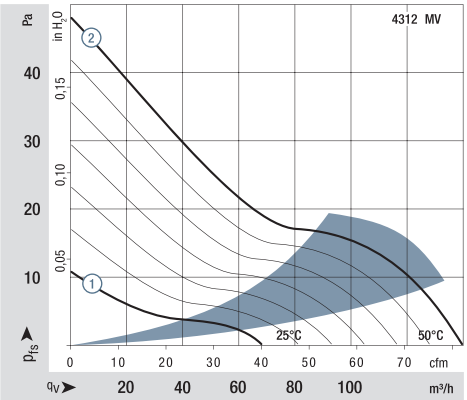

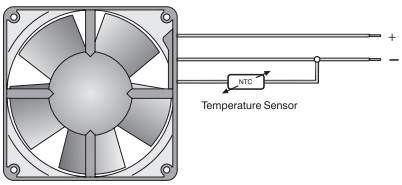

The temperature sensor for controlling the motor speed is not included in the scope of delivery.
For the temperature sensor LZ 370, see accessories.

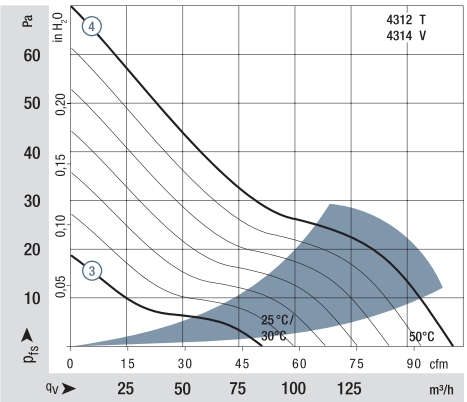

Air performance measured according to: ISO 5801.
Installation category A, without contact protection.
Noise: Total sound power level L_{WA} ISO 103002 measured on a hemisphere with a radius of 2 m.
Sound pressure level L_{pA} measured at 1 m distance from fan axis.
The values given are applicable only under the specified measuring conditions and may differ depending on the installation conditions.
In the event of deviation from the standard configuration, the parameters must be checked after installation!
For detailed information see http://www.ebmpapst.com/general conditions

Rotor protrusion max. 0.4 mm.

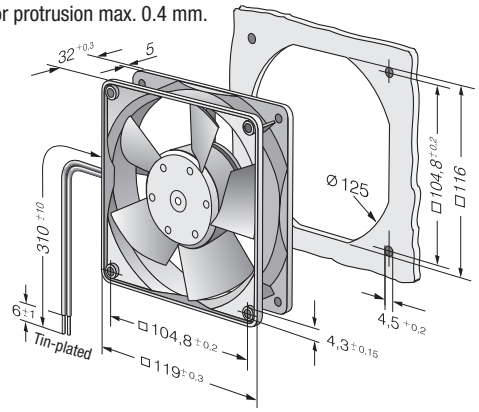

Max. 205 m³/h

DC axial fans

□ 119 x 38 mm

- **Material:** Housing: GRP[1)] (PBT)
  Impeller: GRP[1)] (PA)
- **Direction of air flow:** Exhaust over struts
- **Direction of rotation:** Clockwise, looking towards rotor
- **Connection:** Via single wires AWG 24, TR 64
- **Weight:** 270 g

- **Possible special versions:**
  (See chapter DC fans - specials)
  - Speed signal
  - Go / NoGo alarm
  - Alarm with speed limit
  - External temperature sensor
  - Internal temperature sensor
  - PWM control input
  - Analog control input
  - Moisture protection
  - Degree of protection: IP 54

1) Fiberglass-reinforced plastic

Series 4400 **Nominal data**	Air flow	Air flow	**Nominal voltage**	Voltage range	Sound pressure level	Sound power level	Sintec sleeve bearings Ball bearings	Power consumption	Nominal speed	Temperature range	Service life L_{10} (40 °C) ebm-papst standard Service life L_{10} (T_{max}) ebm-papst standard	Life expectancy L_{10IPC} (40 °C) see page 17	Curve
Type	**m³/h**	**cfm**	**VDC**	**VDC**	**dB(A)**	**Bel(A)**	□ / ■	**Watts**	**rpm⁻¹**	**°C**	**Hours**	**Hours**	
4412 L	150	88	**12**	7...14	37	5.0	■	2.2	2 700	-20...+80	67 500 / 22 500	115 000	③
4412 ML	168	99	**12**	7...15	40	5.1	■	3.0	3 000	-20...+80	67 500 / 22 500	115 000	④
4412 M	184	108	**12**	7...14	42	5.3	■	3.8	3 300	-20...+75	65 000 / 25 000	110 000	⑤
4412 N	205	121	**12**	7...14	46	5.6	■	5.3	3 650	-20...+70	62 500 / 30 000	105 000	⑥
4414 L3	100	59	**24**	12...28	26	4.0	■	1.0	1 800	-20...+80	75 500 / 22 500	127 500	①
4414 LL	124	73	**24**	12...28	33	4.5	■	1.6	2 250	-20...+80	70 000 / 22 500	117 500	②
4414 L	150	88	**24**	18...28	37	5.0	■	2.4	2 700	-20...+80	67 500 / 22 500	115 000	③
4414 ML	168	99	**24**	12...28	40	5.1	■	3.2	3 000	-20...+80	67 500 / 22 500	115 000	④
4414 M	184	108	**24**	18...28	42	5.3	■	4.1	3 300	-20...+75	65 000 / 25 000	110 000	⑤
4414 N	205	121	**24**	18...28	46	5.6	■	5.4	3 650	-20...+70	62 500 / 30 000	105 000	⑥
4418 L	150	88	**48**	36...60	37	5.0	■	2.5	2 700	-20...+75	67 500 / 27 500	115 000	③
4418 ML	168	99	**48**	36...60	40	5.1	■	3.2	3 000	-20...+75	67 500 / 27 500	115 000	④
4418 M	184	108	**48**	36...60	42	5.3	■	4.2	3 300	-20...+70	65 000 / 32 500	110 000	⑤
4418 N	205	121	**48**	36...60	46	5.6	■	5.4	3 650	-20...+70	62 500 / 30 000	105 000	⑥

Subject to change

Further variants can be found on page 59.

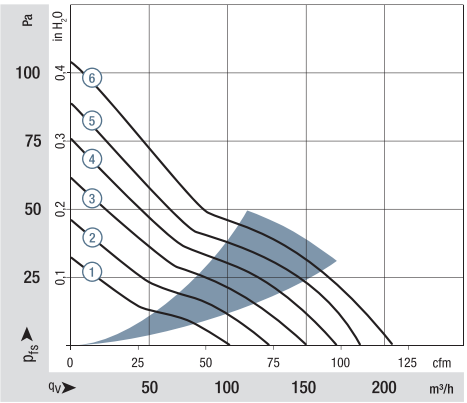

Air performance measured according to: ISO 5801.
Installation category A, without contact protection.
Noise: Total sound power level L_WA ISO 103002 measured on a hemisphere with a radius of 2 m.
Sound pressure level L_pA measured at 1 m distance from fan axis.
The values given are applicable only under the specified measuring conditions and may differ depending on the installation conditions.
In the event of deviation from the standard configuration, the parameters must be checked after installation!
For detailed information see http://www.ebmpapst.com/general conditions

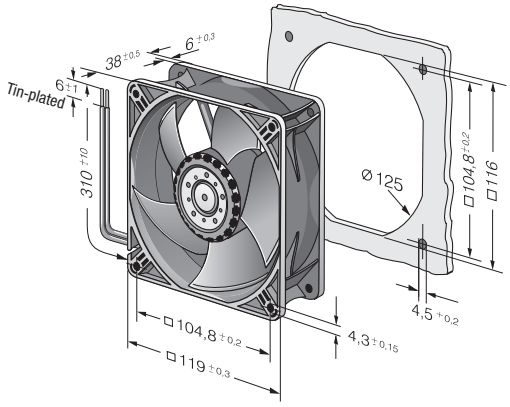

Max. 285 m³/h

DC axial fans

□ 119 x 38 mm

- **Material:** Housing: GRP[1)] (PBT)
  Impeller: GRP[1)] (PA)
- **Direction of air flow:** Exhaust over struts
- **Direction of rotation:** Clockwise, looking towards rotor
- **Connection:** Via single wires AWG 24, TR 64
- **Weight:** 270 g

- **Possible special versions:**
  (See chapter DC fans - specials)
  - Speed signal
  - Go / NoGo alarm
  - Alarm with speed limit
  - External temperature sensor
  - Internal temperature sensor
  - PWM control input
  - Analog control input
  - Moisture protection
  - Degree of protection: IP 54

1) Fiberglass-reinforced plastic

Series 4400 **Nominal data**	Air flow	Air flow	**Nominal voltage**	Voltage range	Sound pressure level	Sound power level	Sintec sleeve bearings / Ball bearings	Power consumption	Nominal speed	Temperature range	Service life L_{10} (40 °C) ebm-papst standard / Service life L_{10} (T_{max}) ebm-papst standard	Life expectancy L_{10IPC} (40 °C) see page 17	Curve
Type	**m³/h**	**cfm**	**VDC**	**VDC**	**dB(A)**	**Bel(A)**	□ / ■	**Watts**	**rpm⁻¹**	**°C**	**Hours**	**Hours**	
4412 H	240	141	**12**	7...14	50	6.0	■	8.6	4 300	-20...+70	57 500 / 27 500	97 500	①
4412/2 HHP	285	168	**12**	7...14.5	55	6.4	■	13.0	5 000	-20...+70	50 000 / 25 000	85 000	②
4414 H	240	141	**24**	18...28	50	6.0	■	8.6	4 300	-20...+70	57 500 / 27 500	97 500	①
4414 HH	285	165	**24**	16...28	55	6.4	■	14.0	5 000	-20...+70	50 000 / 25 000	85 000	②
4414/2 HHP	285	168	**24**	18...28	55	6.4	■	12.0	5 000	-20...+70	50 000 / 25 000	85 000	②
4418 H	240	141	**48**	36...60	50	6.0	■	8.6	4 300	-20...+70	57 500 / 27 500	97 500	①
4418/2 HHP	285	168	**48**	36...60	55	6.4	■	13.0	5 000	-20...+70	50 000 / 25 000	85 000	②

Subject to change

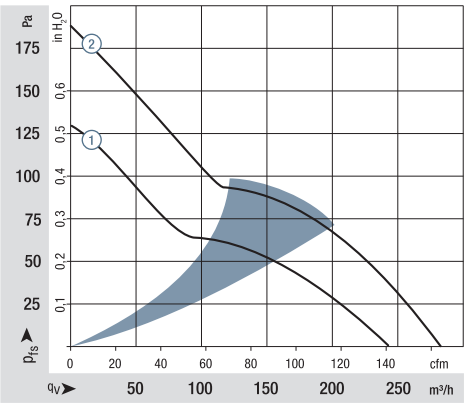

Air performance measured according to: ISO 5801.
Installation category A, without contact protection.
Noise: Total sound power level L_{WA} ISO 103002 measured on a hemisphere with a radius of 2 m.
Sound pressure level L_{pA} measured at 1 m distance from fan axis.
The values given are applicable only under the specified measuring conditions and may differ depending on the installation conditions.
In the event of deviation from the standard configuration, the parameters must be checked after installation!
For detailed information see http://www.ebmpapst.com/general conditions

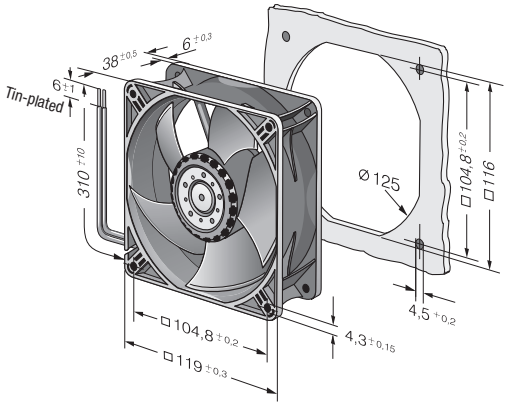

Max. 237 m³/h

DC axial fans

☐ 119 x 38 mm

- **Material:** Housing: Die-cast aluminum
  Impeller: GRP[1] (PA)
- **Direction of air flow:** Intake over struts
- **Direction of rotation:** Clockwise, looking towards rotor
- **Connection:** On flat connectors, 2.8 x 0.5 mm
  Also available with wires as an option
- **Highlights:** Housing with grounding lug for screw M4 x 8 (Torx)
- **Weight:** 390 g

- **Possible special versions:**
  (See chapter DC fans - specials)
  - Speed signal
  - Go / NoGo alarm
  - Alarm with speed limit
  - External temperature sensor
  - Internal temperature sensor
  - PWM control input
  - Analog control input
  - Moisture protection
  - Salt spray protection
  - Degree of protection: IP 54 / IP 68

1) Fiberglass-reinforced plastic

Series 4100 N **Nominal data**	Air flow	Air flow	**Nominal voltage**	Voltage range	Sound pressure level	Sound power level	Sintec sleeve bearings Ball bearings	Power consumption	Nominal speed	Temperature range	Service life L_{10} (40 °C) ebm-papst standard Service life L_{10} (T_{max}) ebm-papst standard	Life expectancy L_{10IPC} (40 °C) see page 17	Curve
Type	**m³/h**	**cfm**	**VDC**	**VDC**	**dB(A)**	**Bel(A)**	**□ / ■**	**Watts**	**rpm⁻¹**	**°C**	**Hours**	**Hours**	
4182 NGX	160	94	**12**	6...15	44	5.3	□	3.7	2 800	-20...+75	85 000 / 37 500	142 500	①
4182 NX	180	106	**12**	6...15	49	5.7	■	4.9	3 200	-30...+75	85 000 / 37 500	142 500	②
4182 NXH	237	140	**12**	7...14	57	6.5	■	11.0	4 400	-30...+55	70 000 / 50 000	117 500	③
4184 NGX	160	94	**24**	12...31.5	44	5.3	□	3.3	2 800	-20...+75	85 000 / 37 500	142 500	①
4184 NXM	160	94	**24**	12...31.5	44	5.3	■	3.2	2 800	-30...+75	85 000 / 37 500	142 500	①
4184 NX	180	106	**24**	12...31.5	49	5.7	■	4.9	3 200	-30...+70	85 000 / 42 500	142 500	②
4184 NXH	237	140	**24**	12...28	57	6.5	■	11.0	4 400	-30...+70	70 000 / 35 000	117 500	③
4188 NGX	160	94	**48**	36...60	44	5.3	□	3.6	2 800	-20...+75	85 000 / 37 500	142 500	①
4188 NXM	160	94	**48**	36...60	44	5.3	■	3.5	2 800	-30...+75	85 000 / 37 500	142 500	①

Subject to change

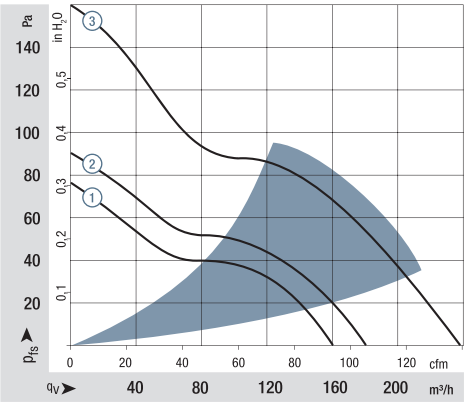

Air performance measured according to: ISO 5801.
Installation category A, without contact protection.
Noise: Total sound power level L_{WA} ISO 103002 measured on a hemisphere with a radius of 2 m.
Sound pressure level L_{pA} measured at 1 m distance from fan axis.
The values given are applicable only under the specified measuring conditions and may differ depending on the installation conditions.
In the event of deviation from the standard configuration, the parameters must be checked after installation!
For detailed information see http://www.ebmpapst.com/general conditions

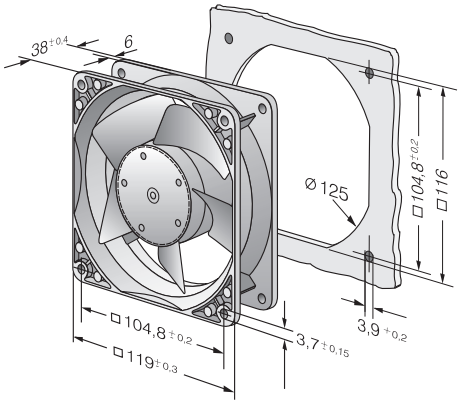

Max. 440 m³/h

DC axial fans

□ 119 x 38 mm

- **Material:** Housing: Die-cast aluminum
  Impeller: GRP[1)] (PA)
- **Direction of air flow:** Intake over struts
- **Direction of rotation:** Clockwise, looking towards rotor
- **Connection:** Via single wires AWG 22 UL 1007, TR 64
- **Highlights:** Housing with grounding lug for screw M4 x 8 (Torx)
- **Weight:** 390 g

1) Fiberglass-reinforced plastic

- **Possible special versions:**
  (See chapter DC fans - specials)
  - Speed signal
  - Go / NoGo alarm
  - Alarm with speed limit
  - External temperature sensor
  - Internal temperature sensor
  - PWM control input
  - Analog control input
  - Moisture protection
  - Salt spray protection
  - Degree of protection:IP 54 / IP 68

Series 4100 N High Performance **Nominal data**	Air flow	Air flow	**Nominal voltage**	Voltage range	Sound pressure level	Sound power level	Sintec sleeve bearings / Ball bearings	Power consumption*	Nominal speed	Temperature range	Service life L_{10} (40 °C) ebm-papst standard / Service life L_{10} (T_{max}) ebm-papst standard	Life expectancy L_{10IPC} (40 °C) see page 17	Curve
Type	**m³/h**	**cfm**	**VDC**	**VDC**	**dB(A)**	**Bel(A)**	□ / ■	**Watts**	**rpm⁻¹**	**°C**	**Hours**	**Hours**	
4112 NHH	260	153	**12**	9...15	60	6.8	■	13.3	5 000	-20...+65	70 000 / 55 000	117 500	①
4112 NH3	310	182	**12**	9...15	65	7.2	■	21.6	6 000	-20...+65	65 000 / 37 500	110 000	②
4112 NH4	355	209	**12**	9...14	67	7.4	■	32.0	6 800	-20...+65	62 500 / 35 000	105 000	③
4114 NHH	260	153	**24**	16...30	60	6.8	■	12.4	5 000	-20...+65	70 000 / 52 500	117 500	①
4114 NH3	310	182	**24**	16...30	65	7.2	■	19.5	6 000	-20...+65	65 000 / 37 500	110 000	②
4114 NH4	355	209	**24**	16...30	67	7.4	■	30.0	6 800	-20...+65	62 500 / 35 000	105 000	③
4114 NH5 *S-Force*	390	230	**24**	16...30	70	7.6	■	45.0*	7 500	-20...+65	62 500 / 35 000	105 000	④
4114 NH6 *S-Force*	440	259	**24**	16...30	73	8.1	■	65.0*	8 400	-20...+65	60 000 / 32 500	102 500	⑤
4118 NHH	260	153	**48**	36...60	60	6.8	■	12.0	5 000	-20...+65	70 000 / 52 500	117 500	①
4118 NH3	310	182	**48**	36...60	65	7.2	■	20.0	6 000	-20...+65	65 000 / 37 500	110 000	②
4118 NH4	355	209	**48**	36...60	67	7.4	■	28.0	6 800	-20...+65	62 500 / 35 000	105 000	③
4118 NH5 *S-Force*	390	230	**48**	36...60	70	7.6	■	45.0*	7 500	-20...+65	62 500 / 35 000	105 000	④
4118 NH6 *S-Force*	440	259	**48**	36...60	73	8.1	■	62.0*	8 400	-20...+65	60 000 / 32 500	102 500	⑤

Subject to change

* Power consumption at free air flow. These values can be significantly higher in the operating point.

*** Power consumption – in operation**

Fan type	optimum operating range (W)
4114 NH5	55
4114 NH6	95
4118 NH5	55
4118 NH6	95

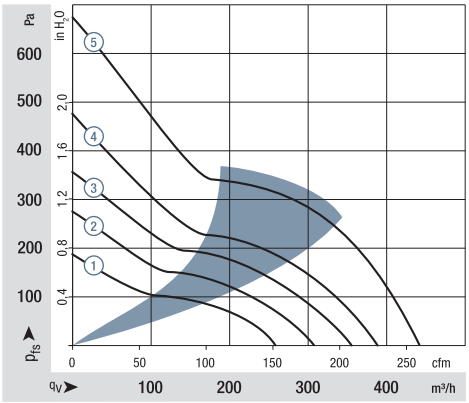

Air performance measured according to: ISO 5801.
Installation category A, without contact protection.
Noise: Total sound power level L_{WA} ISO 103002 measured on a hemisphere with a radius of 2 m.
Sound pressure level L_{pA} measured at 1 m distance from fan axis.
The values given are applicable only under the specified measuring conditions and may differ depending on the installation conditions.
In the event of deviation from the standard configuration, the parameters must be checked after installation!
For detailed information see http://www.ebmpapst.com/general conditions

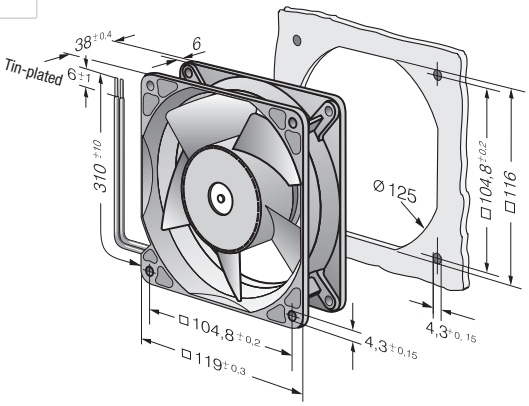

Max. 570 m³/h

S-Force

DC axial fans

□ 119 x 38 mm

- **Material:** Housing: Die-cast aluminum
  Impeller: GRP[1)] (PA)
- **Direction of air flow:** Intake over struts
- **Direction of rotation:** Clockwise, looking towards rotor
- **Connection:** Via single wires AWG 18, 20 or AWG 22, TR 64, speed signal and control input AWG 22
- **Highlights:** Highly efficient and smoothly operating 3-phase fan drive
  Housing with grounding lug for screw M4 x 8 (Torx)
- **Weight:** 425 g

1) Fiberglass-reinforced plastic

- **Possible special versions:**
  (See chapter DC fans - specials)
  - Speed signal
  - Go / NoGo alarm
  - Alarm with speed limit
  - External temperature sensor
  - Internal temperature sensor
  - PWM control input (standard)
  - Analog control input
  - Moisture protection
  - Salt spray protection

Series 4100 N High Performance **Nominal data**	Air flow	Air flow	**Nominal voltage**	Voltage range	Sound pressure level	Sound power level	Sintec sleeve bearings / Ball bearings	Power consumption**	Nominal speed	Temperature range	Service life L_{10} (40 °C) ebm-papst standard / Service life L_{10} (T_{max}) ebm-papst standard	Life expectancy L_{10IPC} (40 °C) see page 17	Curve
Type	**m³/h**	**cfm**	**VDC**	**VDC**	**dB(A)**	**Bel(A)**	**□/■**	**Watts**	**rpm⁻¹**	**°C**	**Hours**	**Hours**	
4114 N/2 H7P	500	294	**24**	16...30	76	8.5	■	90	9 500	-20...+75	57 500 / 25 000	97 500	①
4114 N/2 H8P	570	336	**24**	16...30	78	8.9	■	120	11 000	-20...+75	55 000 / 22 500	92 500	②
4118 N/2 H7P	500	294	**48**	36...60*	76	8.5	■	90	9 500	-20...+75	57 500 / 25 000	97 500	①
4118 N/2 H8P	570	336	**48**	36...60*	78	8.9	■	120	11 000	-20...+75	55 000 / 22 500	92 500	②

Subject to change

* 36...72 VDC on request.

Speed control range from 500 rpm⁻¹ up to maximum nominal speed.
Standstill at 0% PWM, maximum speed if control cable is interrupted.
To attain the specified service life, an external capacitor must be wired between the plus and minus strands. Please note the wiring suggestion on page 16.
** Power consumption at free air flow, these values can be significantly higher in the operating point.

**** Power consumption - in operation**

Fan type	optimum operating range (W)
4114 NH7P	100
4114 NH8P	160
4118 NH7P	100
4118 NH8P	160

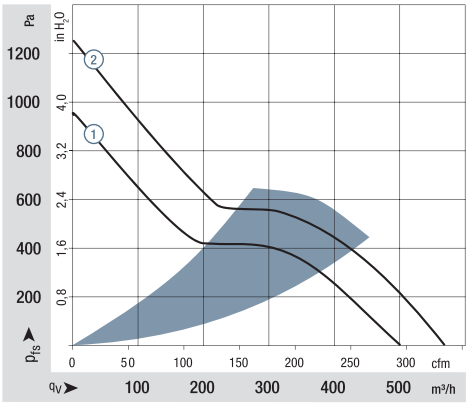

Air performance measured according to: ISO 5801.
Installation category A, without contact protection.
Noise: Total sound power level L_{WA} ISO 103002 measured on a hemisphere with a radius of 2 m.
Sound pressure level L_{pA} measured at 1 m distance from fan axis.
The values given are applicable only under the specified measuring conditions and may differ depending on the installation conditions.
In the event of deviation from the standard configuration, the parameters must be checked after installation!
For detailed information see http://www.ebmpapst.com/general conditions

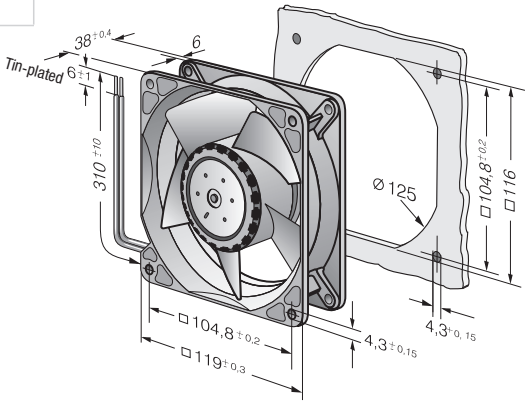

Finger guards from p. 242

ebmpapst

Max. 280 m³/h

DC diagonal fan

□ 119 x 38 mm

- **Material:** Housing: GRP[1)] (PBT)
  Available in die-cast aluminum
  Impeller: GRP[1)] (PA)
- **Direction of air flow:** Exhaust over struts
- **Direction of rotation:** Counterclockwise, looking towards rotor
- **Connection:** Via single wires AWG 22, TR 64
- **Highlights:** Housing with grounding lug for screw M4 x 8 (Torx)
- **Weight:** 375 g (with metal housing: 455 g)

- **Possible special versions:**
  (See chapter DC fans - specials)
  - Speed signal
  - Go / NoGo alarm
  - Alarm with speed limit
  - External temperature sensor
  - Internal temperature sensor
  - PWM control input
  - Analog control input
  - Moisture protection
  - Salt spray protection
  - Degree of protection: IP 54 / IP 68

1) Fiberglass-reinforced plastic

Series DV 4100

Nominal data

Type	Air flow m³/h	Air flow cfm	Nominal voltage VDC	Voltage range VDC	Sound pressure level dB(A)	Sound power level Bel(A)	Sintec sleeve bearings □ / Ball bearings ■	Power consumption* Watts	Nominal speed rpm⁻¹	Temperature range °C	Service life L_{10} (40 °C) ebm-papst standard Hours	Service life L_{10} (T_{max}) ebm-papst standard Hours	Life expectancy L_{10IPC} (40 °C) see page 17 Hours	Curve
DV 4112 N	280	165	**12**	9...15	61	6.9	■	21.0	6 000	-20...+65	70 000 / 40 000		117 500	①
DV 4114 N	280	165	**24**	16...30	61	6.9	■	20.5	6 000	-20...+65	70 000 / 40 000		117 500	①
DV 4118 N	280	165	**48**	36...60	61	6.9	■	20.0	6 000	-20...+65	70 000 / 40 000		117 500	①

Subject to change

* Power consumption at free air flow. These values can be significantly higher in the operating point.

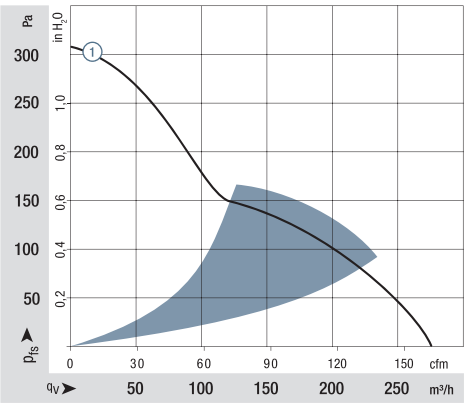

Air performance measured according to: ISO 5801.
Installation category A, without contact protection.
Noise: Total sound power level L_{WA} ISO 103002 measured on a hemisphere with a radius of 2 m.
Sound pressure level L_{pA} measured at 1 m distance from fan axis.
The values given are applicable only under the specified measuring conditions and may differ depending on the installation conditions.
In the event of deviation from the standard configuration, the parameters must be checked after installation!
For detailed information see
http://www.ebmpapst.com/general conditions

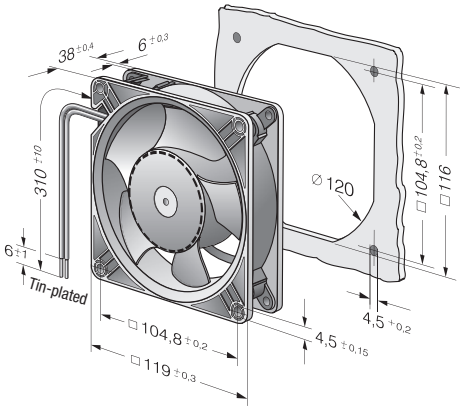

Max. 340 m³/h

DC axial fans

□ 127 x 38 mm

- **Material:** Housing: GRP[1)] (PBT)
  Impeller: GRP[1)] (PA)
- **Direction of air flow:** Exhaust over struts
- **Direction of rotation:** Counterclockwise, looking towards rotor
- **Connection:** Via single wires AWG 22, TR 64
- **Weight:** 310 g

- **Possible special versions:**
  (See chapter DC fans - specials)
  - Speed signal
  - Go / NoGo alarm
  - Alarm with speed limit
  - External temperature sensor
  - Internal temperature sensor
  - PWM control input
  - Analog control input
  - Moisture protection
  - Salt spray protection
  - Degree of protection: IP 54 / IP 68

1) Fiberglass-reinforced plastic

Series 5200 N **Nominal data**	Air flow	Air flow	**Nominal voltage**	Voltage range	Sound pressure level	Sound power level	Sintec sleeve bearings / Ball bearings	Power consumption**	Nominal speed	Temperature range	Service life L_{10} (40 °C) ebm-papst standard / Service life L_{10} (T_{max}) ebm-papst standard	Life expectancy L_{10IPC} (40 °C) see page 17	Curve
Type	**m³/h**	**cfm**	**VDC**	**VDC**	**dB(A)**	**Bel(A)**	□/■	**Watts**	**rpm⁻¹**	**°C**	**Hours**	**Hours**	
5212 NM	187	110	**12**	7...14.5	43	5.3	■	4.1	2 750	-20...+75	62 500 / 27 500	105 000	①
5212 NN	216	127	**12**	7...14	46	5.6	■	6.2	3 150	-20...+70	57 500 / 25 000	97 500	②
5212 NH	252	148	**12**	7...14	51	6.0	■	9.8	3 650	-20...+70	45 000 / 22 500	75 000	③
5212 NHH*	340	200	**12**	9...15	58	6.6	■	19.0	4 900	-20...+65	45 000 / 25 000	75 000	④
5214 NM	187	110	**24**	12...28	43	5.3	■	4.6	2 750	-20...+75	62 500 / 27 500	105 000	①
5214 NN	216	127	**24**	12...28	46	5.6	■	6.0	3 150	-20...+75	57 500 / 25 000	97 500	②
5214 NH	252	148	**24**	12...28	51	6.0	■	9.8	3 650	-20...+70	45 000 / 22 500	75 000	③
5214 NHH*	340	200	**24**	16...30	58	6.6	■	17.5	4 900	-20...+65	45 000 / 25 000	75 000	④
5218 NM	187	110	**48**	36...56	43	5.3	■	4.5	2 750	-20...+75	62 500 / 27 500	105 000	①
5218 NN	216	127	**48**	36...56	46	5.6	■	6.2	3 150	-20...+70	57 500 / 32 500	97 500	②
5218 NH	252	148	**48**	36...56	51	6.0	■	9.6	3 650	-20...+55	45 000 / 32 500	75 000	③
5218 NHH*	340	200	**48**	36...60	58	6.6	■	18.0	4 900	-20...+65	45 000 / 25 000	75 000	④

Subject to change

** Power consumption at free air flow, these values can be significantly higher in the operating point.

***NHH models:** fan housing with molded-in spacers.

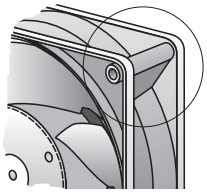

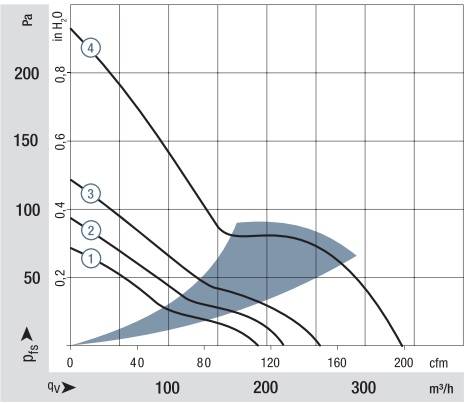

Air performance measured according to: ISO 5801.
Installation category A, without contact protection.
Noise: Total sound power level L_{WA} ISO 103002 measured on a hemisphere with a radius of 2 m.
Sound pressure level L_{pA} measured at 1 m distance from fan axi.
The values given are applicable only under the specified measuring conditions and may differ depending on the installation conditions.
In the event of deviation from the standard configuration, the parametersmust be checked after installation!
For detailed information see
http://www.ebmpapst.com/general conditions

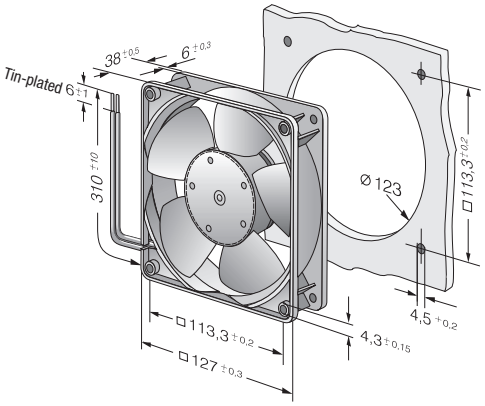

Finger guards from p. 242

ebmpapst

Max. 320 m³/h

DC diagonal fan

□ 127 x 38 mm

- **Material:** Housing: GRP[1)] (PBT)
  Available in Die-cast aluminum
  Metal flange
  Impeller: GRP[1)] (PA)
- **Direction of air flow:** Exhaust over struts
- **Direction of rotation:** Counterclockwise, looking towards rotor
- **Connection:** Via single wires AWG 22, TR 64
- **Highlights:** Housing with grounding lug for screw M4 x 8 (Torx)
- **Weight:** 415 g (with metal housing: 490 g)

- **Possible special versions:**
  (See chapter DC fans - specials)
  - Speed signal
  - Go / NoGo alarm
  - Alarm with speed limit
  - External temperature sensor
  - Internal temperature sensor
  - PWM control input
  - Analog control input
  - Moisture protection
  - Salt spray protection
  - Degree of protection: IP 54

1) Fiberglass-reinforced plastic

Series DV 5200

Nominal data

Type	Air flow m³/h	Air flow cfm	**Nominal voltage VDC**	Voltage range VDC	Sound pressure level dB(A)	Sound power level Bel(A)	Sintec sleeve bearings □ / Ball bearings ■	Power consumption* Watts	Nominal speed rpm⁻¹	Temperature range °C	Service life L_{10} (40 °C) ebm-papst standard Hours	Service life L_{10} (T_{max}) ebm-papst standard Hours	Life expectancy L_{10}IPC (40 °C) see page 17 Hours	Curve
DV 5212 N	270	159	**12**	9...15	56	6.4	■	21.0	5 000	-20...+65	70 000 / 40 000		117 500	①
DV 5214 N	270	159	**24**	16...30	56	6.4	■	20.4	5 000	-20...+65	70 000 / 40 000		117 500	①
DV 5218 N	270	159	**48**	36...60	56	6.4	■	18.5	5 000	-20...+65	70 000 / 40 000		117500	①
Standard model comes with speed signal and PWM control input. Other versions by request.														
DV 5214/2 HP	320	188	**24**	16...30	62	7.2	■	38.5	6 000	-20...+65	62 500 / 35 000		105 000	②

Subject to change

Speed control range from 1000 rpm⁻¹ up to maximum nominal speed.
Standstill at 0% PWM, maximum speed if control cable is interrupted.
* Power consumption at free air flow. These values can be significantly higher in the operating point.

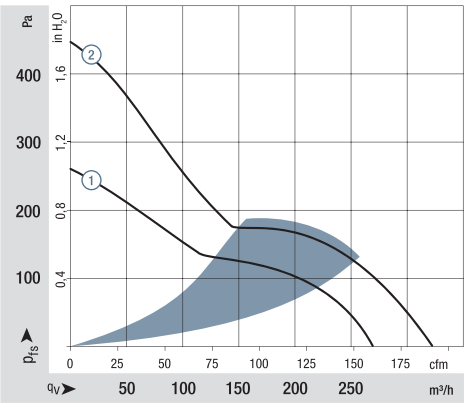

Air performance measured according to: ISO 5801.
Installation category A, without contact protection.
Noise: Total sound power level L_{WA} ISO 103002 measured on a hemisphere with a radius of 2 m.
Sound pressure level L_{pA} measured at 1 m distance from fan axis.
The values given are applicable only under the specified measuring conditions and may differ depending on the installation conditions.
In the event of deviation from the standard configuration, the parameters must be checked after installation!
For detailed information see
http://www.ebmpapst.com/general conditions

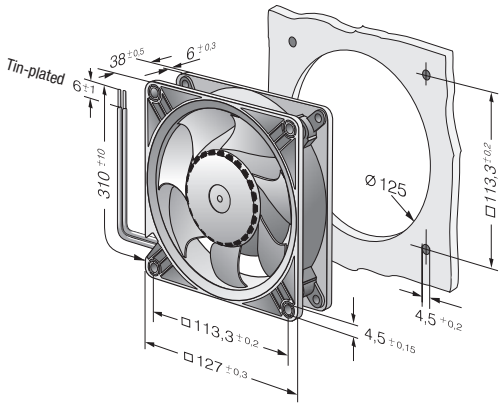

Max. 260 m³/h

DC axial fans

☐ 135 x 38 mm

- **Material:** Housing: Die-cast aluminum
  Impeller: painted sheet steel
- **Direction of air flow:** Exhaust over struts
- **Direction of rotation:** Counterclockwise, looking towards rotor
- **Connection:** Via single wires AWG 22, TR 64
- **Highlights:** Housing with grounding lug for screw M4 x 8 (Torx)
  48 V design incl. screws.
- **Weight:** 650 g

- **Possible special versions:**
  (See chapter DC fans - specials)
  - Speed signal
  - Go / NoGo alarm
  - Alarm with speed limit
  - External temperature sensor
  - Internal temperature sensor
  - PWM control input
  - Analog control input
  - Moisture protection
  - Salt spray protection
  - Degree of protection: IP 54

Series 5100 N **Nominal data**	Air flow	Air flow	**Nominal voltage**	Voltage range	Sound pressure level	Sound power level	Sintec sleeve bearings Ball bearings	Power consumption*	Nominal speed	Temperature range	Service life L_{10} (40 °C) ebm-papst standard Service life L_{10} (T_{max}) ebm-papst standard	Life expectancy L_{10IPC} (40 °C) see page 17	Curve
Type	**m³/h**	**cfm**	**VDC**	**VDC**	**dB(A)**	**Bel(A)**	**☐ / ■**	**Watts**	**rpm⁻¹**	**°C**	**Hours**	**Hours**	
5112 N	260	153	**12**	6...15	48	6.1	■	9.5	2 900	-25...+72	80 000 / 37 500	135 000	①
5114 N	260	153	**24**	12...30	48	6.1	■	9.5	2 900	-25...+72	80 000 / 37 500	135 000	①
5118 N	260	153	**48**	24...60	48	6.1	■	9.5	2 900	-25...+72	80 000 / 37 500	135 000	①

Subject to change

* Power consumption at free air flow. These values can be significantly higher in the operating point.

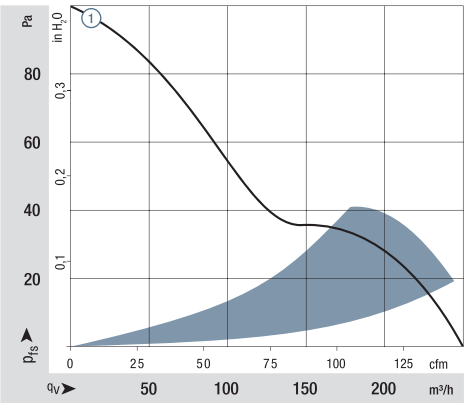

Air performance measured according to: ISO 5801.
Installation category A, without contact protection.
Noise: Total sound power level L_{WA} ISO 103002 measured on a hemisphere with a radius of 2 m.
Sound pressure level L_{pA} measured at 1 m distance from fan axis.
The values given are applicable only under the specified measuring conditions and may differ depending on the installation conditions.
In the event of deviation from the standard configuration, the parameters must be checked after installation!
For detailed information see http://www.ebmpapst.com/general conditions

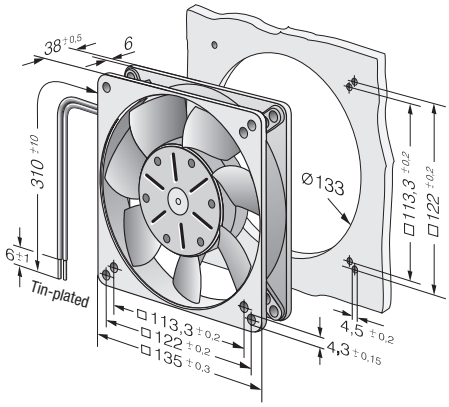

Finger guards
from p. 242

ebmpapst

Max. 340 m³/h

S-Force

DC axial fans

□ 140 x 51 mm

- **Material:** Housing: Die-cast aluminum
  Impeller: GRP[1)] (PA)
- **Direction of air flow:** Intake over struts
- **Direction of rotation:** Counterclockwise, looking towards rotor
- **Connection:** Via single wires AWG 22, TR 64
- **Highlights:** Housing with grounding lug for screw M4 x 8 (Torx)
- **Weight:** 900 g

- **Possible special versions:**
  (See chapter DC fans - specials)
  - Speed signal
  - Go / NoGo alarm
  - Alarm with speed limit
  - External temperature sensor
  - Internal temperature sensor
  - PWM control input
  - Analog control input
  - Moisture protection
  - Salt spray protection
  - Degree of protection: IP 54

1) Fiberglass-reinforced plastic

Series 5300 **Nominal data**	Air flow	Air flow	**Nominal voltage**	Voltage range	Sound pressure level	Sound power level	Sintec sleeve bearings / Ball bearings	Power consumption*	Nominal speed	Temperature range	Service life L_{10} (40 °C) ebm-papst standard / Service life L_{10} (T_{max}) ebm-papst standard	Life expectancy L_{10IPC} (40 °C) see page 17	Curve
Type	**m³/h**	**cfm**	**VDC**	**VDC**	**dB(A)**	**Bel(A)**	□ / ■	**Watts**	**rpm⁻¹**	**°C**	**Hours**	**Hours**	
5314/2 HP	340	200	**24**	16...28	64	7.2	■	28.4	5 000	-20...+65	77 500 / 40 000	130 000	①
5318/2 HP	340	200	**48**	36...72	64	7.2	■	27	5 000	-20...+65	77 500 / 40 000	130 000	①

Subject to change

Speed control range from 700 rpm^{-1} up to maximum nominal speed.
Standstill at 0% PWM, maximum speed if control cable is interrupted.
* Power consumption at free air flow. These values can be significantly higher in the operating point.

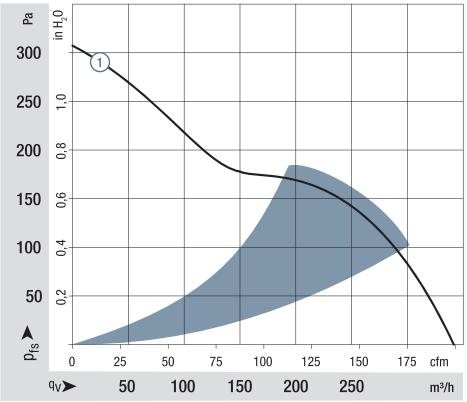

Air performance measured according to: ISO 5801.
Installation category A, without contact protection.
Noise: Total sound power level L_{WA} ISO 103002 measured on a hemisphere with a radius of 2 m.
Sound pressure level L_{pA} measured at 1 m distance from fan axis.
The values given are applicable only under the specified measuring conditions and may differ depending on the installation conditions.
In the event of deviation from the standard configuration, the parameters must be checked after installation!
For detailed information see
http://www.ebmpapst.com/general conditions

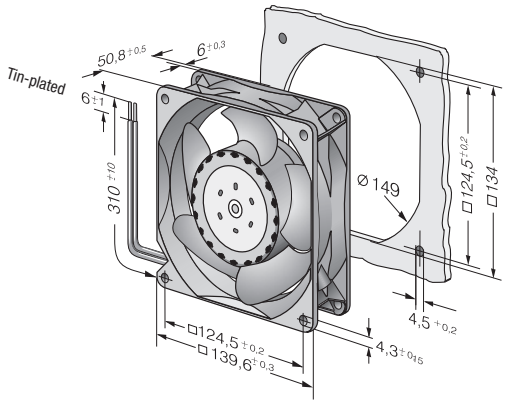

Max. 670 m³/h

S-Force

DC axial fans

□ 140 x 51 mm

- **Material:** Housing: Die-cast aluminum
  Impeller: GRP[1)] (PA)
- **Direction of air flow:** Intake over struts
- **Direction of rotation:** Counterclockwise, looking towards rotor
- **Connection:** Via single wires AWG 20 and AWG 22, TR 64
- **Highlights:** 3-phase fan drive with very smooth operation
  Housing with grounding lug for screw M4 x 8 (Torx)
- **Weight:** 900 g

1) Fiberglass-reinforced plastic

- **Possible special versions:**
  (See chapter DC fans - specials)
  - Speed signal
  - Go / NoGo alarm
  - Alarm with speed limit
  - External temperature sensor
  - Internal temperature sensor
  - PWM control input
  - Analog control input
  - Multi-option control input
  - Moisture protection
  - Salt spray protection
  - Degree of protection: IP 54

Series 5300 TD

Nominal data	Air flow	Air flow	Nominal voltage	Voltage range	Sound pressure level	Sound power level	Sintec sleeve bearings / Ball bearings	Power consumption*	Nominal speed	Temperature range	Service life L_{10} (40 °C) ebm-papst standard / Service life L_{10} (T_{max}) ebm-papst standard	Life expectancy L_{10IPC} (40 °C) see page 17	Curve
Type	**m³/h**	**cfm**	**VDC**	**VDC**	**dB(A)**	**Bel(A)**	□/■	**Watts**	**rpm⁻¹**	**°C**	**Hours**	**Hours**	
5312/2 TDHP	410	241	**12**	8...16	70	7.7	■	43	6 000	-20...+70	70 000 / 35 000	117 500	①
5314/2 TDHP	410	241	**24**	16...36	70	7.7	■	42	6 000	-20...+70	70 000 / 35 000	117 500	①
5314/2 TDHHP	490	288	**24**	16...36	75	8.1	■	67	7 000	-20...+70	62 500 / 30 000	105 000	②
5318/2 TDHP	410	241	**48**	36...72	70	7.7	■	42	6 000	-20...+70	70 000 / 35 000	117 500	①
5318/2 TDHHP	490	288	**48**	36...72	75	8.1	■	66	7 000	-20...+70	62 500 / 30 000	105 000	②
5318/2 TDH4P	670	394	**48**	36...72	79	8.8	■	149	9 200	-20...+65	57 500 / 32 500	97 500	③

Subject to change

Speed control range from 1000 rpm⁻¹ up to maximum nominal speed.
Standstill at 0% PWM, maximum speed if control cable is interrupted.
* Power consumption at free air flow. These values can be significantly higher in the operating point.

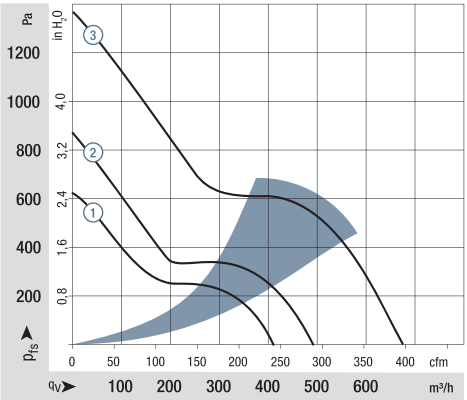

Air performance measured according to: ISO 5801.
Installation category A, without contact protection.
Noise: Total sound power level L_{WA} ISO 103002 measured on a hemisphere with a radius of 2 m.
Sound pressure level L_{pA} measured at 1 m distance from fan axis.
The values given are applicable only under the specified measuring conditions and may differ depending on the installation conditions.
In the event of deviation from the standard configuration, the parameters must be checked after installation!
For detailed information see http://www.ebmpapst.com/general conditions

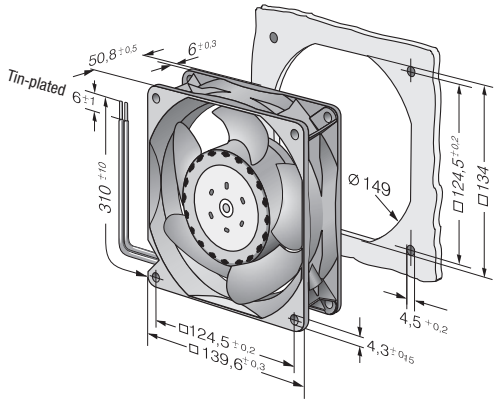

Finger guards from p. 242

Max. 360 m³/h

DC axial fans

Ø 150 x 38 mm

- **Material:** Housing: Die-cast aluminum
  Impeller: painted sheet steel
- **Direction of air flow:** Exhaust over struts
- **Direction of rotation:** Counterclockwise, looking towards rotor
- **Connection:** Via single wires AWG 22, TR 64
- **Highlights:** Housing with grounding lug for screw M4 x 8 (Torx)
- **Weight:** 620 g

- **Possible special versions:**
  (See chapter DC fans - specials)
  - Speed signal
  - Go / NoGo alarm
  - Alarm with speed limit
  - External temperature sensor
  - Internal temperature sensor
  - PWM control input
  - Analog control input
  - Moisture protection
  - Salt spray protection
  - Degree of protection:IP 54 / IP 68

Series 7100 N **Nominal data**	Air flow	Air flow	**Nominal voltage**	Voltage range	Sound pressure level	Sound power level	Sintec sleeve bearings Ball bearings	Power consumption*	Nominal speed	Temperature range	Service life L_{10} (40 °C) ebm-papst standard Service life L_{10} (T_{max}) ebm-papst standard	Life expectancy L_{10}IPC (40 °C) see page 17	Curve
Type	**m³/h**	**cfm**	**VDC**	**VDC**	**dB(A)**	**Bel(A)**	□ / ■	**Watts**	**rpm⁻¹**	**°C**	**Hours**	**Hours**	
7112 N	308	181	**12**	6...15	53	6.2	■	12.0	2 850	-25...+72	80 000 / 37 500	135 000	①
7114 N	308	181	**24**	12...30	53	6.2	■	12.0	2 850	-25...+72	80 000 / 37 500	135 000	①
7114 NH	360	212	**24**	12...26.5	58	6.7	■	19.0	3 350	-25...+72	75 000 / 35 000	127 500	②
7118 N	308	181	**48**	24...60	53	6.2	■	12.0	2 850	-25...+72	80 000 / 37 500	135 000	①

Subject to change

* Power consumption at free air flow. These values can be significantly higher in the operating point.

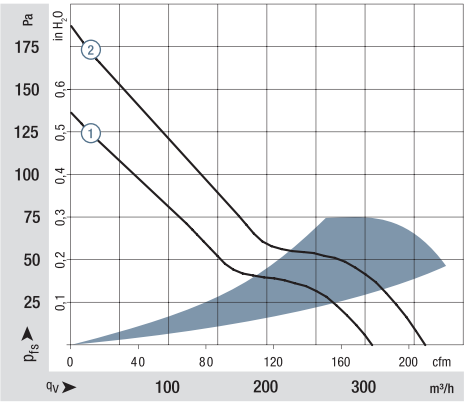

Air performance measured according to: ISO 5801.
Installation category A, without contact protection.
Noise: Total sound power level L_{WA} ISO 103002 measured on a hemisphere with a radius of 2 m.
Sound pressure level L_{pA} measured at 1 m distance from fan axis.
The values given are applicable only under the specified measuring conditions and may differ depending on the installation conditions.
In the event of deviation from the standard configuration, the parameters must be checked after installation!
For detailed information see http://www.ebmpapst.com/general conditions

Wire fastened with cable tie.
Strand fastened using cable tie;
cable tie protrudes 1 mm.

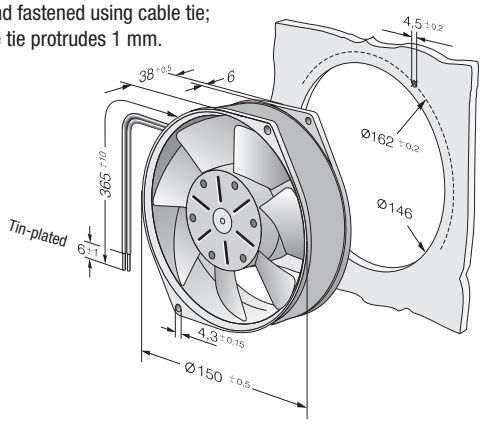

Max. 360 m³/h

DC axial fans

Ø 150 x 55 mm

- **Material:** Housing: Die-cast aluminum
  Impeller: GRP[1)] (PA)
- **Direction of air flow:** Exhaust over struts
- **Direction of rotation:** Counterclockwise, looking towards rotor
- **Connection:** Via single wires AWG 22, TR 64
- **Highlights:** Housing with grounding lug for screw M4 x 8 (Torx)
- **Weight:** 725 g

- **Possible special versions:**
  (See chapter DC fans - specials)
  - Speed signal
  - Go / NoGo alarm
  - Alarm with speed limit
  - External temperature sensor
  - Internal temperature sensor
  - PWM control input
  - Analog control input
  - Moisture protection
  - Salt spray protection
  - Degree of protection: IP 54 / IP 68

1) Fiberglass-reinforced plastic

Series 7200 N **Nominal data**	Air flow	Air flow	**Nominal voltage**	Voltage range	Sound pressure level	Sound power level	Sintec sleeve bearings Ball bearings	Power consumption*	Nominal speed	Temperature range	Service life L_{10} (40 °C) ebm-papst standard Service life L_{10} (T_{max}) ebm-papst standard	Life expectancy L_{10IPC} (40 °C) see page 17	Curve
Type	**m³/h**	**cfm**	**VDC**	**VDC**	**dB(A)**	**Bel(A)**	□ / ■	**Watts**	**rpm⁻¹**	**°C**	**Hours**	**Hours**	
7212 N	360	212	**12**	6...15	53	6.2	■	12.0	3 050	-25...+72	80 000 / 37 500	135 000	①
7214 N	360	212	**24**	12...30	53	6.2	■	12.0	3 050	-25...+72	80 000 / 37 500	135 000	①
7218 N	360	212	**48**	24...60	53	6.2	■	12.0	3 050	-25...+72	80 000 / 37 500	135 000	①

Subject to change

* Power consumption at free air flow. These values can be significantly higher in the operating point.

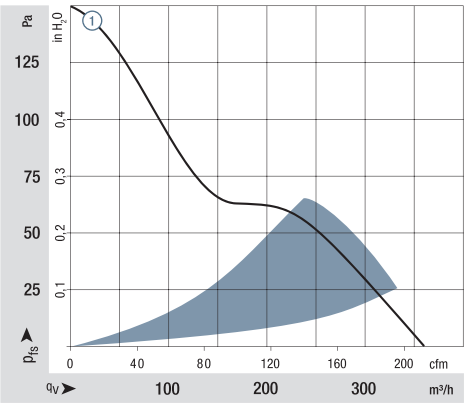

Air performance measured according to: ISO 5801.
Installation category A, without contact protection.
Noise: Total sound power level L_WA ISO 103002 measured on a hemisphere with a radius of 2 m.
Sound pressure level L_pA measured at 1 m distance from fan axis.
The values given are applicable only under the specified measuring conditions and may differ depending on the installation conditions.
In the event of deviation from the standard configuration, the parameters must be checked after installation!
For detailed information see http://www.ebmpapst.com/general conditions

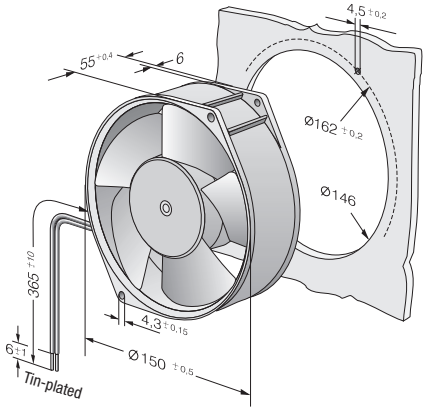

Max. 480 m³/h

DC axial fans

172 x 150 x 51 mm

- **Material:** Housing: Die-cast aluminum
  Impeller: GRP[1)] (PA)
- **Direction of air flow:** Exhaust over struts
- **Direction of rotation:** Counterclockwise, looking towards rotor
- **Connection:** on flat plugs 3 x 0.5 mm
- **Highlights:** Housing with grounding lug for screw M4 x 8 (Torx)
- **Weight:** 760 g

- **Possible special versions:**
  (See chapter DC fans - specials)
  - Speed signal
  - Go / NoGo alarm
  - Alarm with speed limit
  - External temperature sensor
  - Internal temperature sensor
  - PWM control input
  - Analog control input
  - Moisture protection
  - Salt spray protection
  - Degree of protection: IP 54

1) Fiberglass-reinforced plastic

Series 6400 **Nominal data**	Air flow	Air flow	**Nominal voltage**	Voltage range	Sound pressure level	Sound power level	Sintec sleeve bearings / Ball bearings	Power consumption***	Nominal speed	Temperature range	Service life L_{10} (40 °C) ebm-papst standard / Service life L_{10} (T_{max}) ebm-papst standard	Life expectancy L_{10IPC} (40 °C) see page 17	Curve
Type	**m³/h**	**cfm**	**VDC**	**VDC**	**dB(A)**	**Bel(A)**	□ / ■	**Watts**	**rpm⁻¹**	**°C**	**Hours**	**Hours**	
6412 M	350	206	**12**	8...15	52	6.0	■	12	2 850	-20...+72	80 000 / 37 500	135 000	①
6424 M	350	206	**24**	12...32	52	6.0	■	12	2 850	-20...+72	80 000 / 37 500	135 000	①
6424	410	241	**24**	12...28	57	6.4	■	17	3 400	-20...+72	75 000 / 35 000	127 500	②
6424 H	480	283	**24**	12...28	63	7.1	■	26	4 000	-20...+55**	70 000 / 50 000	117 500	③
6448	410	241	**48**	28...60	57	6.4	■	17	3 400	-20...+72	75 000 / 35 000	127 500	②
6448 H*	480	283	**48**	28...60	63	7.1	■	26	4 000	-20...+55**	70 000 / 50 000	117 500	③

Subject to change

* Strand 310 mm.
** 72 °C versions on request
*** Power consumption at free air flow, these values can be significantly higher in the operating point.

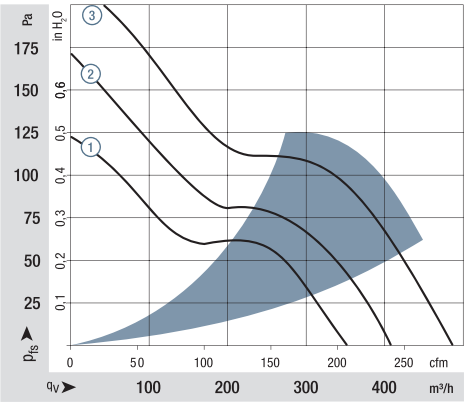

Air performance measured according to: ISO 5801.
Installation category A, without contact protection.
Noise: Total sound power level L_{WA} ISO 103002 measured on a hemisphere with a radius of 2 m.
Sound pressure level L_{pA} measured at 1 m distance from fan axis.
The values given are applicable only under the specified measuring conditions and may differ depending on the installation conditions.
In the event of deviation from the standard configuration, the parameters must be checked after installation!
For detailed information see
http://www.ebmpapst.com/general conditions

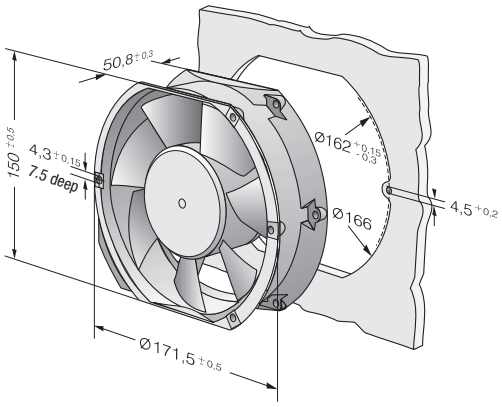

Max. 900 m³/h

DC axial fans

172 x 150 x 51 mm

- **Material:** Housing: Die-cast aluminum
  Impeller: GRP[1)] (PA)
- **Direction of air flow:** Exhaust over struts
- **Direction of rotation:** Counterclockwise, looking towards rotor
- **Connection:** Via single wires AWG 18, 20 or AWG 22, TR 64, speed signal and control input AWG 22
- **Highlights:** Highly efficient and smoothly operating 3-phase fan drive
  Housing with grounding lug for screw M4 x 8 (Torx)
- **Weight:** 760 g

1) Fiberglass-reinforced plastic

- **Possible special versions:**
  (See chapter DC fans - specials)
  - Speed signal
  - Go / NoGo alarm
  - Alarm with speed limit
  - External temperature sensor
  - Internal temperature sensor
  - PWM control input
  - Analog control input
  - Moisture protection
  - Salt spray protection
  - Degree of protection: IP 54
  - Reversible direction of rotation

Series 6400 TD **Nominal data**		Air flow	Air flow	**Nominal voltage**	Voltage range	Sound pressure level	Sound power level	Sintec sleeve bearings / Ball bearings	Power consumption**	Nominal speed	Temperature range	Service life L_{10} (40 °C) ebm-papst standard / Service life L_{10} (T_{max}) ebm-papst standard	Life expectancy L_{10IPC} (40 °C) see page 17	Curve
	Type	**m³/h**	**cfm**	**VDC**	**VDC**	**dB(A)**	**Bel(A)**	□/■	**Watts**	**rpm⁻¹**	**°C**	**Hours**	**Hours**	
Min	6424 TD...	90	53	**24**	16...28	18	—	■	2	800	-20...+60	70 000 / 45 000	117 500	①
Max		600	353			65	7.4		50	5 100				②
Min	6448 TD...	90	53	**48**	40...55*	18	—	■	2	800	-20...+60	70 000 / 45 000	117 500	①
Max		600	353			65	7.4		50	5 100				②
Min	6448 TDHH...	90	53	**48**	36...72	18	—	■	2	800	-20...+60	70 000 / 45 000	117 500	①
Max		900	530			78	8.6		163	7500				③

Subject to change

* Variants with an extended voltage range available on request.

Models 6424 TD..., 6448 TD... and 6448 TDHH... are available in customer-specific, custom-developed variants only.
The figures indicated are technically feasible benchmark values. The fans can be specially adapted to your application with signal outputs and control inputs.
For details of the technical possibilities, refer to the chapters on the sensor signal, alarm signal and control inputs beginning on page 165.
** Power consumption at free air flow, these values can be significantly higher in the operating point.

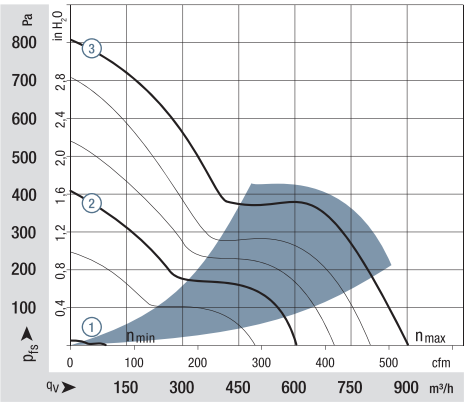

Air performance measured according to: ISO 5801.
Installation category A, without contact protection.
Noise: Total sound power level L_{WA} ISO 103002 measured on a hemisphere with a radius of 2 m.
Sound pressure level L_{pA} measured at 1 m distance from fan axis.
The values given are applicable only under the specified measuring conditions and may differ depending on the installation conditions.
In the event of deviation from the standard configuration, the parameters must be checked after installation!
For detailed information see
http://www.ebmpapst.com/general conditions

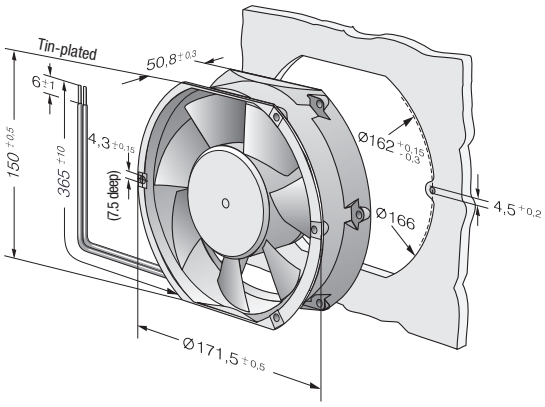

Finger guards
from p. 242

ebmpapst

Max. 530 m³/h

DC diagonal fan

172 x 160 x 51 mm

- **Material:** Housing: Die-cast aluminum
  Impeller: GRP[1)] (PA)
- **Direction of air flow:** Exhaust over struts
- **Direction of rotation:** Counterclockwise, looking towards rotor
- **Connection:** Via single wires AWG 22, TR 64
- **Highlights:** Housing with grounding lug for screw M4 x 8 (Torx)
- **Weight:** 820 g

- **Possible special versions:**
  (See chapter DC fans - specials)
  - Speed signal
  - Go / NoGo alarm
  - Alarm with speed limit
  - External temperature sensor
  - Internal temperature sensor
  - PWM control input
  - Analog control input
  - Moisture protection
  - Salt spray protection
  - Degree of protection: IP 54

1) Fiberglass-reinforced plastic

Series DV 6400 **Nominal data**	Air flow	Air flow	**Nominal voltage**	Voltage range	Sound pressure level	Sound power level	Sintec sleeve bearings Ball bearings	Power consumption	Nominal speed	Temperature range	Service life L_{10} (40 °C) ebm-papst standard	Service life L_{10} (T_{max}) ebm-papst standard	Life expectancy L_{10IPC} (40 °C) see page 17	Curve
Type	**m³/h**	**cfm**	**VDC**	**VDC**	**dB(A)**	**Bel(A)**	□ / ■	**Watts**	**rpm⁻¹**	**°C**	**Hours**		**Hours**	
DV 6424	530	312	**24**	16...28	65	7.3	■	40	4 300	-20...+75	90 000 / 35 000		152 500	①
DV 6448	530	312	**48**	28...60	65	7.3	■	40	4 300	-20...+75	90 000 / 35 000		152 500	①

Subject to change

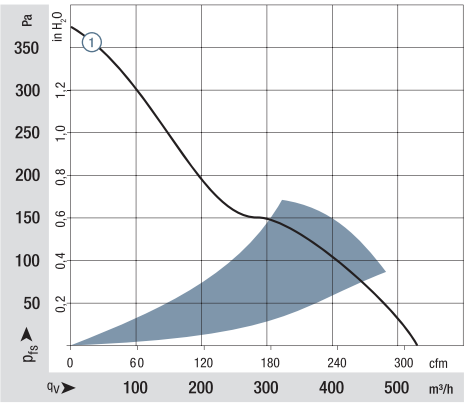

Air performance measured according to: ISO 5801.
Installation category A, without contact protection.
Noise: Total sound power level L_WA ISO 103002 measured on a hemisphere with a radius of 2 m.
Sound pressure level L_pA measured at 1 m distance from fan axis.
The values given are applicable only under the specified measuring conditions and may differ depending on the installation conditions.
In the event of deviation from the standard configuration, the parameters must be checked after installation!
For detailed information see
http://www.ebmpapst.com/general conditions

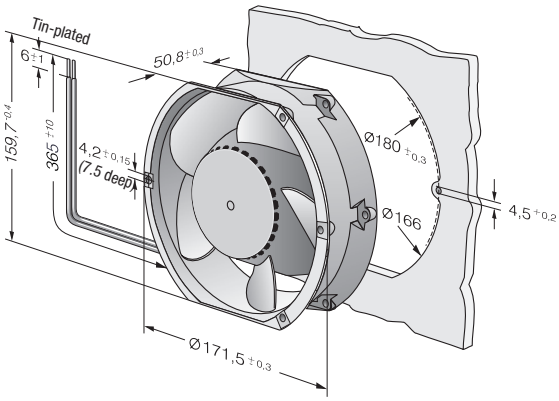

Max. 680 m³/h

DC diagonal fan

172 x 160 x 51 mm

- **Material:** Housing: Die-cast aluminum
  Impeller: GRP[1)] (PA)
- **Direction of air flow:** Exhaust over struts
- **Direction of rotation:** Counterclockwise, looking towards rotor
- **Connection:** Via single wires AWG 22, TR 64
- **Highlights:** 3-phase fan drive with very smooth operation and high efficiency. Housing with grounding lug for screw M4 x 8 (Torx)
- **Weight:** 820 g

1) Fiberglass-reinforced plastic

- **Possible special versions:**
  (See chapter DC fans - specials)
  - Speed signal
  - Go / NoGo alarm
  - Alarm with speed limit
  - External temperature sensor
  - Internal temperature sensor
  - PWM control input
  - Analog control input
  - Moisture protection
  - Salt spray protection
  - Degree of protection: IP 54
  - Reversible direction of rotation

Series DV 6400 TD TURBOFAN **Nominal data**		Air flow	Air flow	**Nominal voltage**	Voltage range	Sound pressure level	Sound power level	Sintec sleeve bearings / Ball bearings	Power consumption*	Nominal speed	Temperature range	Service life L_{10} (40 °C) ebm-papst standard / Service life L_{10} (T_{max}) ebm-papst standard	Life expectancy L_{10IPC} (40 °C) see page 17	Curve
	Type	**m³/h**	**cfm**	**VDC**	**VDC**	**dB(A)**	**Bel(A)**	□/■	**Watts**	**rpm⁻¹**	**°C**	**Hours**	**Hours**	
	DV 6424 TD	680	400	**24**	16...28	71	7.9	■	91	5 500	-20...+60	65 000 / 40 000	110 000	②
Min	DV 6424 TD...	100	59	**24**	16...28	29	—	■	2	800	-20...+60	65 000 / 40 000	110 000	①
Max		680	400			71	7.9		91	5 500				②
Min	DV 6448 TD...	100	59	**48**	40...55	29	—	■	2	800	-20...+60	65 000 / 40 000	110 000	①
Max		680	400			71	7.9		86	5 500				②

Subject to change

Models DV 6424 TD... and DV 6448 TD... are available in customer-specific, custom-developed variants only.
The figures indicated are technically feasible benchmark values. The fans can be specially adapted to your application with signal outputs and control inputs.
For details of the technical possibilities, refer to the chapters on the sensor signal, alarm signal and control inputs beginning on page 165.
* Power consumption at free air flow. These values can be significantly higher in the operating point.

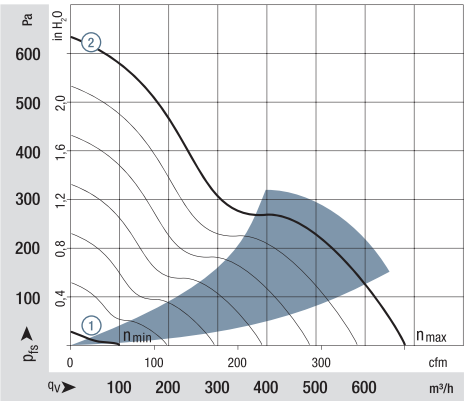

Air performance measured according to: ISO 5801.
Installation category A, without contact protection.
Noise: Total sound power level L_{WA} ISO 103002 measured on a hemisphere with a radius of 2 m.
Sound pressure level L_{pA} measured at 1 m distance from fan axis.
The values given are applicable only under the specified measuring conditions and may differ depending on the installation conditions.
In the event of deviation from the standard configuration, the parameters must be checked after installation!
For detailed information see http://www.ebmpapst.com/general conditions

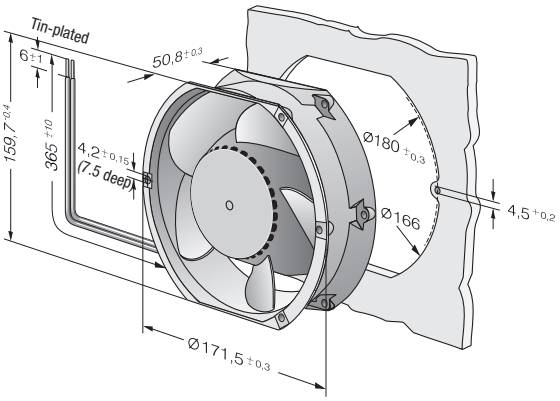

Finger guards from p. 242

ebmpapst

Max. 930 m³/h

S-Force

DC axial fans

172 x 160 x 51 mm

- **Material:** Housing: Die-cast aluminum
  Impeller: GRP[1] (PA)
- **Direction of air flow:** Exhaust over struts
- **Direction of rotation:** Counterclockwise, looking towards rotor
- **Connection:** Via single wires AWG 18, 20 or AWG 22, TR 64, speed signal and control input AWG 22
- **Highlights:** Highly efficient and smoothly operating 3-phase fan drive
  Housing with grounding lug for screw M4 x 8 (Torx)
- **Weight:** 910 g

1) Fiberglass-reinforced plastic

- **Possible special versions:**
  (See chapter DC fans - specials)
  - Speed signal
  - Go / NoGo alarm
  - Alarm with speed limit
  - External temperature sensor
  - Internal temperature sensor
  - PWM control input (standard)
  - Analog control input
  - Multi-option control input
  - Moisture protection
  - Salt spray protection
  - Degree of protection: IP 54

Series 6300 TD

Nominal data / Type	Air flow	Air flow	Nominal voltage	Voltage range	Sound pressure level	Sound power level	Sintec sleeve bearings / Ball bearings	Power consumption*	Nominal speed	Temperature range	Service life L_{10} (40 °C) ebm-papst standard	Service life L_{10} (T_{max}) ebm-papst standard	Life expectancy L_{10IPC} (40 °C) see page 17	Curve
Type	m³/h	cfm	VDC	VDC	dB(A)	Bel(A)	□/■	Watts	rpm⁻¹	°C	Hours		Hours	
6314/2 TDHHP-015	710	418	**24**	16...36	69	7.9	■	67	7 000	-20...+75	62 500 / 25 000		105 000	①
6318/2 TDH4P-007	930	546	**48**	36...72	75	8.4	■	150	9 200	-20...+75	52 500 / 20 000		87 500	②

Subject to change

Speed control range from 1000 rpm⁻¹ up to maximum nominal speed.
Standstill at 0% PWM, maximum speed if control cable is interrupted.
* Power consumption at free air flow. These values can be significantly higher in the operating point.

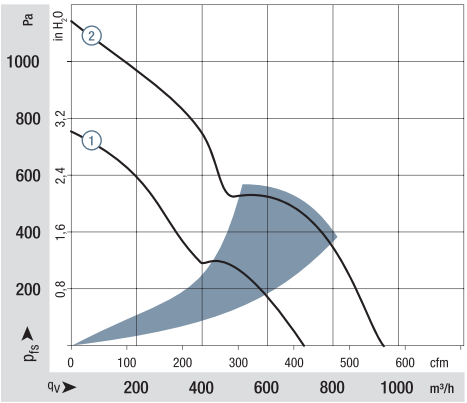

Air performance measured according to: ISO 5801.
Installation category A, without contact protection.
Noise: Total sound power level L_WA ISO 103002 measured on a hemisphere with a radius of 2 m.
Sound pressure level L_pA measured at 1 m distance from fan axis.
The values given are applicable only under the specified measuring conditions and may differ depending on the installation conditions.
In the event of deviation from the standard configuration, the parameters must be checked after installation!
For detailed information see
http://www.ebmpapst.com/general conditions

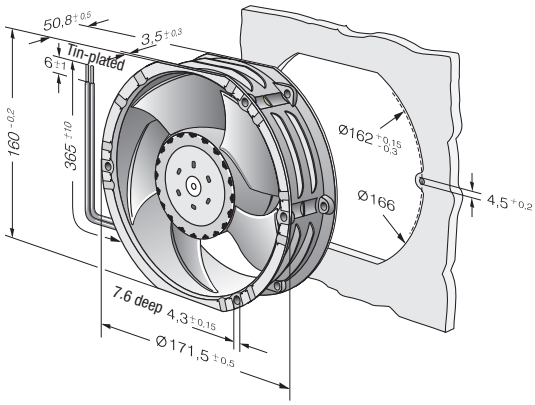

Max. 685 m³/h

S-Panther

DC axial fans

Ø 172 x 51 mm

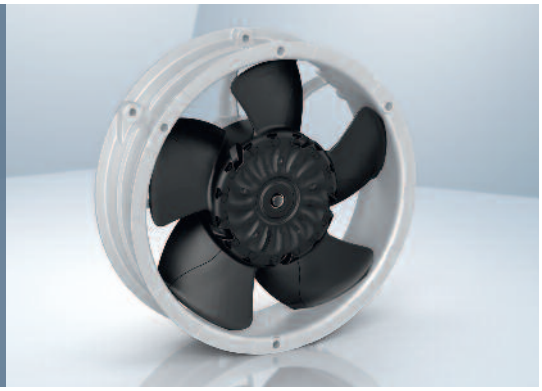

- **Material:** Housing: Die-cast aluminum
  Impeller: GRP[1)] (PA)
- **Direction of air flow:** Exhaust over struts
- **Direction of rotation:** Counterclockwise, looking towards rotor
- **Connection:** (+) and GND AWG 20, UL 1007, TR 64; speed signal and alarm signal: AWG 22, UL 1007, TR 64
- **Highlights:** Highly efficient and smoothly operating 3-phase fan drive
  Housing with grounding lug for screw M4 x 8 (Torx)
- **Weight:** 850 g

1) Fiberglass-reinforced plastic

- **Possible special versions:**
  (See chapter DC fans - specials)
  - Speed signal
  - Go / NoGo alarm
  - Alarm with speed limit
  - External temperature sensor
  - Internal temperature sensor
  - PWM control input (standard)
  - Analog control input
  - Multi-option control input
  - Moisture protection
  - Salt spray protection
  - Degree of protection: IP 54 / IP 68

Series 6300 N

Nominal data	Air flow	Air flow	Nominal voltage	Voltage range	Sound pressure level	Sound power level	Sintec sleeve bearings / Ball bearings	Power consumption	Nominal speed	Temperature range	Service life L_{10} (40 °C) ebm-papst standard / Service life L_{10} (T_{max}) ebm-papst standard	Life expectancy L_{10IPC} (40 °C) see page 17	Curve
Type	**m³/h**	**cfm**	**VDC**	**VDC**	**dB(A)**	**Bel(A)**	□/■	**Watts**	**rpm⁻¹**	**°C**	**Hours**	**Hours**	
6314 N/2 HHP	540	318	**24**	16…32	-	6.9	■	30	4000	-20…+70	80 000 / 40 000	135 000	①
6318 N/2 H3P	685	403	**48**	36…60	-	7.5	■	53	5000	-20…+70	77 500 / 40 000	130 000	②

Subject to change

Speed control range from 1000 rpm⁻¹ up to maximum nominal speed. Standstill at 0% PWM, maximum speed if control cable is interrupted.

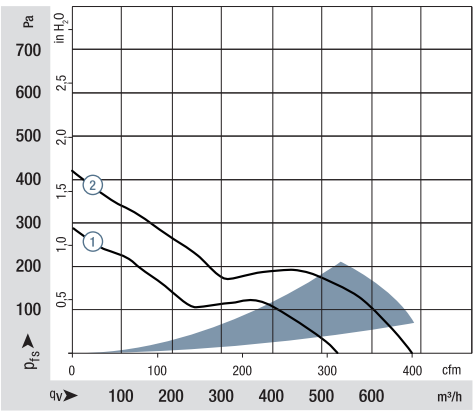

Air performance measured according to: ISO 5801.
Installation category A, without contact protection.
Noise: Total sound power level L_{WA} ISO 103002 measured on a hemisphere with a radius of 2 m.
Sound pressure level L_{pA} measured at 1 m distance from fan axis.
The values given are applicable only under the specified measuring conditions and may differ depending on the installation conditions.
In the event of deviation from the standard configuration, the parameters must be checked after installation!
For detailed information see http://www.ebmpapst.com/general conditions

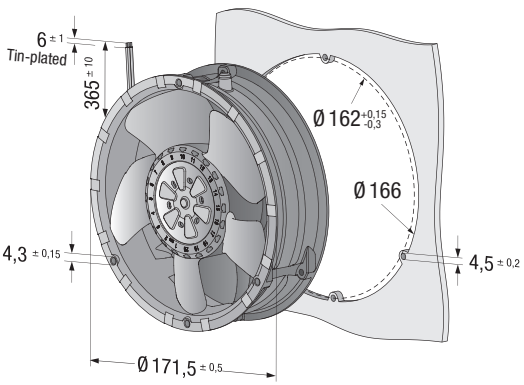

Finger guards
from p. 242

ebmpapst

Max. 1030 m³/h

S-Panther

DC axial fans

Ø 172 x 51 mm

- **Material:** Housing: Die-cast aluminum
  Impeller: GRP[1)] (PA)
- **Direction of air flow:** Exhaust over struts
- **Direction of rotation:** Counterclockwise, looking towards rotor
- **Connection:** AWG 18, 20 UL 1007, TR 64, speed and alarm signals: AWG 22, UL 1007, TR 64
- **Highlights:** Highly efficient and smoothly operating 3-phase fan drive
  Housing with grounding lug for screw M4 x 8 (Torx)
- **Weight:** 850 g

1) Fiberglass-reinforced plastic

- **Possible special versions:**
  (See chapter DC fans - specials)
  - Speed signal
  - Go / NoGo alarm
  - Alarm with speed limit
  - External temperature sensor
  - Internal temperature sensor
  - PWM control input (standard)
  - Analog control input
  - Multi-option control input
  - Moisture protection
  - Salt spray protection
  - Degree of protection: IP 54

Series 6300 NTD

Nominal data	Air flow	Air flow	Nominal voltage	Voltage range	Sound pressure level	Sound power level	Sintec sleeve bearings / Ball bearings	Power consumption*	Nominal speed	Temperature range	Service life L_{10} (40 °C) ebm-papst standard / Service life L_{10} (T_{max}) ebm-papst standard	Life expectancy L_{10IPC} (40 °C) see page 17	Curve
Type	**m³/h**	**cfm**	**VDC**	**VDC**	**dB(A)**	**Bel(A)**	□ / ■	**Watts**	**rpm⁻¹**	**°C**	**Hours**	**Hours**	
6314 N/2 TDHHP	970	571	**24**	16…36	-	8.3	■	135	7200	-20…+70	62,500 / 32,500	105,000	①
6318 N/2 TDH3P	1030	606	**48**	36…72	83	8.4	■	152	7500	-20…+70	60,000 / 30,000	102,500	②

Subject to change

Speed control range from 1000 rpm⁻¹ up to maximum nominal speed. Standstill at 0% PWM, maximum speed if control cable is interrupted.
* Power consumption at free air flow. These values can be significantly higher in the operating point.

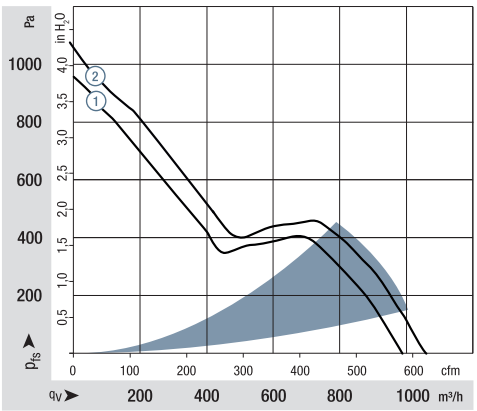

Air performance measured according to: ISO 5801.
Installation category A, without contact protection.
Noise: Total sound power level L_{WA} ISO 103002 measured on a hemisphere with a radius of 2 m.
Sound pressure level L_{pA} measured at 1 m distance from fan axis.
The values given are applicable only under the specified measuring conditions and may differ depending on the installation conditions.
In the event of deviation from the standard configuration, the parameters must be checked after installation!
For detailed information see http://www.ebmpapst.com/general conditions

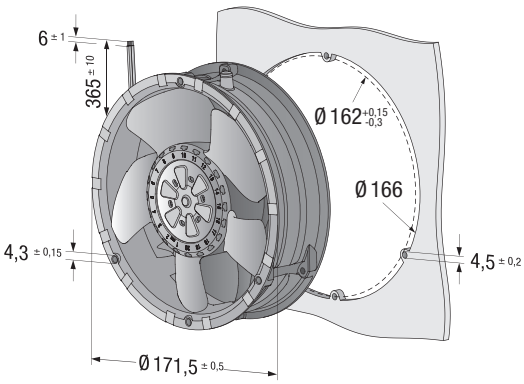

Max. 545 m³/h

S-Force

DC axial fans

Ø 172 x 51 mm

- **Material:** Housing: Die-cast aluminum
  Impeller: GRP[1)] (PA)
- **Direction of air flow:** Exhaust over struts
- **Direction of rotation:** Counterclockwise, looking towards rotor
- **Connection:** Via single wires AWG 22, TR 64
- **Highlights:** Housing with grounding lug for screw M4 x 8 (Torx)
- **Weight:** 825 g

- **Possible special versions:**
  (See chapter DC fans - specials)
  - Speed signal
  - Go / NoGo alarm
  - Alarm with speed limit
  - External temperature sensor
  - Internal temperature sensor
  - PWM control input (standard)
  - Analog control input
  - Moisture protection
  - Salt spray protection
  - Degree of protection: IP 54

1) Fiberglass-reinforced plastic

Series 6300 **Nominal data**	Air flow	Air flow	**Nominal voltage**	Voltage range	Sound pressure level	Sound power level	Sintec sleeve bearings / Ball bearings	Power consumption*	Nominal speed	Temperature range	Service life L_{10} (40 °C) ebm-papst standard / Service life L_{10} (T_{max}) ebm-papst standard	Life expectancy L_{10IPC} (40 °C) see page 17	Curve
Type	**m³/h**	**cfm**	**VDC**	**VDC**	**dB(A)**	**Bel(A)**	□/■	**Watts**	**rpm⁻¹**	**°C**	**Hours**	**Hours**	
6314/2 MP	395	232	**24**	16...30	51	6.0	■	14	3 700	-20...+75	82 500 / 32 500	140 000	①
6314/2 NP	470	276	**24**	16...30	56	6.5	■	23	4 400	-20...+70	80 000 / 40 000	135 000	②
6314/2 HP	545	320	**24**	16...30	58	6.9	■	31	5 000	-20...+65	77 500 / 42 500	130 000	③
6318/2 HP	545	320	**48**	36...72	58	6.9	■	32	5 000	-20...+65	77 500 / 42 500	130 000	③

Subject to change

Speed control range from 700 rpm⁻¹ up to maximum nominal speed. Standstill at 0% PWM, maximum speed if control cable is interrupted.
* Power consumption at free air flow. These values can be significantly higher in the operating point.

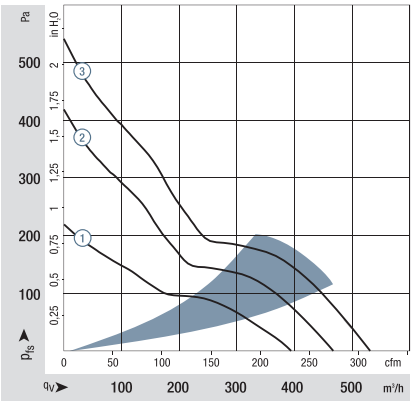

Air performance measured according to: ISO 5801.
Installation category A, without contact protection.
Noise: Total sound power level LwA ISO 103002 measured on a hemisphere with a radius of 2 m.
Sound pressure level LpA measured at 1 m distance from fan axis.
The values given are applicable only under the specified measuring conditions and may differ depending on the installation conditions.
In the event of deviation from the standard configuration, the parameters must be checked after installation!
For detailed information see
http://www.ebmpapst.com/general conditions

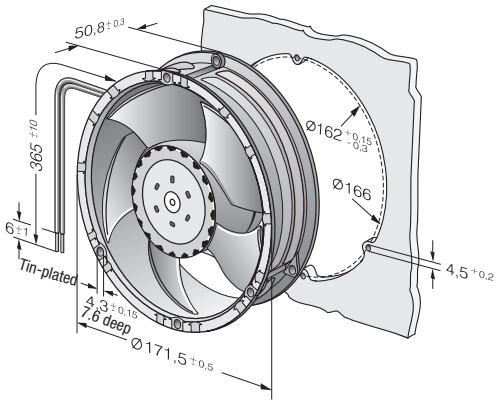

Finger guards from p. 242

ebmpapst

Max. 930 m³/h

S-Force

DC axial fans

Ø 172 x 51 mm

- **Material:** Housing: Die-cast aluminum
  Impeller: GRP[1)] (PA)
- **Direction of air flow:** Exhaust over struts
- **Direction of rotation:** Counterclockwise, looking towards rotor
- **Connection:** Via single wires AWG 18, 20 or AWG 22, TR 64, speed signal and control input AWG 22
- **Highlights:** Highly efficient and smoothly operating 3-phase fan drive
  Housing with grounding lug for screw M4 x 8 (Torx)
- **Weight:** 910 g

1) Fiberglass-reinforced plastic

- **Possible special versions:**
  (See chapter DC fans - specials)
  - Speed signal
  - Go / NoGo alarm
  - Alarm with speed limit
  - External temperature sensor
  - Internal temperature sensor
  - PWM control input (standard)
  - Analog control input
  - Multi-option control input
  - Moisture protection
  - Salt spray protection
  - Degree of protection: IP 54

Series 6300 TD

Nominal data

Type	Air flow m³/h	Air flow cfm	**Nominal voltage VDC**	Voltage range VDC	Sound pressure level dB(A)	Sound power level Bel(A)	Sintec sleeve bearings □ / Ball bearings ■	Power consumption* Watts	Nominal speed rpm⁻¹	Temperature range °C	Service life L_{10} (40 °C) ebm-papst standard Hours	Service life L_{10} (T_{max}) ebm-papst standard Hours	Life expectancy L_{10IPC} (40 °C) see page 17 Hours	Curve
6312/2 TDHP	600	353	**12**	8...16	60	7.3	■	40	5 500	-20...+70	75 000 / 37 500		127 500	②
6314/2 TDHP-298	600	353	**24**	16...30	60	7.3	■	42	5 500	-20...+65	75 000 / 42 500		127 500	①
6314/2 TDHP	600	353	**24**	16...36	60	7.3	■	40	5 500	-20...+75	75 000 / 30 000		127 500	②
6314/2 TDHHP	710	418	**24**	16...36	69	7.9	■	67	7 000	-20...+75	62 500 / 25 000		105 000	③
6314/2 TDH4P	930	545	**24**	16...36	75	8.4	■	150	9 200	-20...+75	52 500 / 20 000		87 500	⑤
6318/2 TDHP-299	600	353	**48**	36...60	60	7.3	■	42	5 500	-20...+65	75 000 / 42 500		127 500	①
6318/2 TDHP	600	353	**48**	36...72	60	7.3	■	40	5 500	-20...+75	75 000 / 30 000		127 500	②
6318/2 TDHHP	710	418	**48**	36...72	69	7.9	■	67	7 000	-20...+75	62 500 / 25 000		105 000	③
6318/2 TDH4P	930	545	**48**	36...72	75	8.4	■	150	9 200	-20...+75	52 500 / 20 000		87 500	④

Subject to change

Speed control range from 1000 rpm⁻¹ up to maximum nominal speed.
Standstill at 0% PWM, maximum speed if control cable is interrupted.
* Power consumption at free air flow. These values can be significantly higher in the operating point.

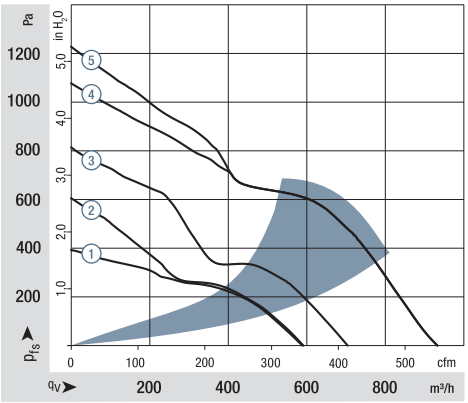

*** Power consumption – in operation**

Fan type	optimum operating range (W)
6318/2 TDHHP	115
6318/2 TDH4P	270

Air performance measured according to: ISO 5801.
Installation category A, without contact protection.
Noise: Total sound power level LwA ISO 103002 measured on a hemisphere with a radius of 2 m.
Sound pressure level LpA measured at 1 m distance from fan axis.
The values given are applicable only under the specified measuring conditions and may differ depending on the installation conditions.
In the event of deviation from the standard configuration, the parameters must be checked after installation!
For detailed information see http://www.ebmpapst.com/general conditions

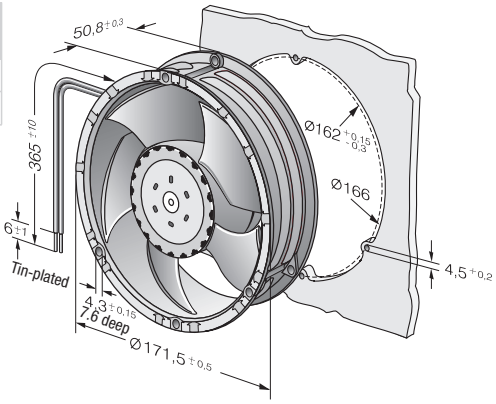

Max. 1100 m³/h

S-Force

DC diagonal fan

Ø 172 x 51 mm

- **Material:** Housing: Die-cast aluminum
  Impeller: GRP[1)] (PA)
- **Direction of air flow:** Exhaust over struts
- **Direction of rotation:** Counterclockwise, looking towards rotor
- **Connection:** (+) and GND: AWG 18, UL 1007, TR 64; speed and alarm signal: AWG 22, UL 1007, TR 64
- **Highlights:** Highly efficient and smoothly operating 3-phase fan drive
  Housing with grounding lugfor screw M4 x 8 (Torx)
- **Weight:** 1050 g

1) Fiberglass-reinforced plastic

- **Possible special versions:**
  (See chapter DC fans - specials)
  - Speed signal
  - Go / NoGo alarm
  - Alarm with speed limit
  - External temperature sensor
  - Internal temperature sensor
  - PWM control input (standard)
  - Analog control input
  - Multi-option control input
  - Moisture protection
  - Salt spray protection
  - Degree of protection: IP 54

Series DV 6300 TD

Nominal data / Type	Air flow m³/h	Air flow cfm	Nominal voltage VDC	Voltage range VDC	Sound pressure level dB(A)	Sound power level Bel(A)	Sintec sleeve bearings □ / Ball bearings ■	Power consumption Watts	Nominal speed rpm⁻¹	Temperature range °C	Service life L_{10} (40 °C) ebm-papst standard Hours	Service life L_{10} (T_{max}) ebm-papst standard Hours	Life expectancy L_{10IPC} (40 °C) see page 17 Hours	Curve
DV 6318/2 TDHP*	630	371	**48**	36…72	68	7.6	■	75	4000	-20…+65	70 000	40 000	117 500	①
DV 6318/2 TDHHP*	770	453	**48**	36…72	73	8.0	■	135	4900	-20…+65	60 000	32 500	102 500	②
DV 6318/2 TDH4P	1050	617	**48**	36…72	77	8.7	■	300	6500	-20…+65	50 000	27 500	85 000	③
DV 6318/2 TDH5P**	1100	647	**48**	36…72	79	8.9	■	360	6800	-20…+65	40 000	22 500	67 500	④

Subject to change

* On request
** Rotor protrusion a = 3 mm

Speed control range from 1000 rpm⁻¹ up to maximum nominal speed. Standstill at 0% PWM, maximum speed if control cable is interrupted.
The fan has an acceleration of up to 30% that produces a smoother curve.

		n rpm⁻¹	P_{ed} W	Lw_A dB(A)	L_{10} (40 °C)	L_{10} (65 °C)	L_{10IPC} (40 °C)
①	❶	4000	65,5	79	70 000	40 000	117 500
①	❷	3835	64,5	78	72 500	40 000	122 500
①	❸	3815	64,5	76	75 000	42 500	127 500
①	❹	3930	65	76	77 500	42 500	130 000
①	❺	4240	66	79	77 500	42 500	130 000
②	❶	4900	120	83	60 000	32 500	102 500
②	❷	4690	119	82	67 500	37 500	115 000
②	❸	4670	119	80	72 500	40 000	122 500
②	❹	4870	120	81	75 000	42 500	127 500
②	❺	5190	121	85	75 000	42 500	127 500

		n rpm⁻¹	P_{ed} W	Lw_A dB(A)	L_{10} (40 °C)	L_{10} (65 °C)	L_{10IPC} (40 °C)
③	❶	6500	280	90	50 000	27 500	85 000
③	❷	6230	275	89	62 500	35 000	105 000
③	❸	6200	280	88	70 000	40 000	117 500
③	❹	6450	281	88	72 500	40 000	122 500
③	❺	6900	283	92,5	72 500	40 000	122 500
④	❶	6950	345	92	40 000	22 500	67 500
④	❷	6720	345	91	57 500	32 500	97 500
④	❸	6630	345	89,5	62 500	35 000	105 000
④	❹	6850	345	89	67 500	37 500	115 000
④	❺	7300	345	94	72 500	40 000	122 500

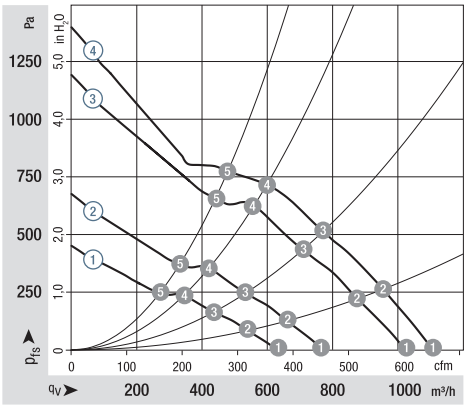

Air performance measured according to: ISO 5801.
Installation category A, without contact protection.
Noise: Total sound power level L_WA ISO 103002 measured on a hemisphere with a radius of 2 m.
Sound pressure level L_pA measured at 1 m distance from fan axis.
The values given are applicable only under the specified measuring conditions and may differ depending on the installation conditions.
In the event of deviation from the standard configuration, the parameters must be checked after installation!
For detailed information see http://www.ebmpapst.com/general conditions

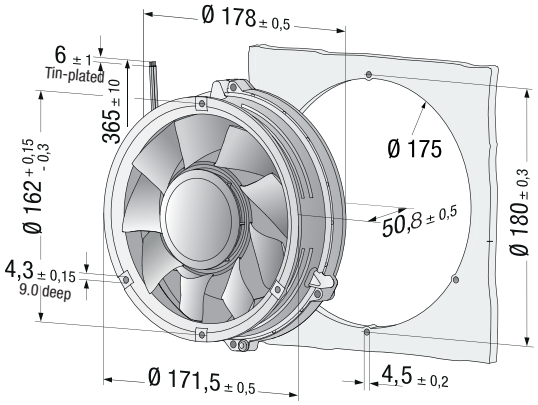

Finger guards from p. 242

ebmpapst

Max. 1220 m³/h

S-Force

DC axial fans

220 x 200 x 51 mm

- **Material:** Housing: Die-cast aluminum
  Impeller: GRP[1] (PA)
- **Direction of air flow:** Exhaust over struts
- **Direction of rotation:** Counterclockwise, looking towards rotor
- **Connection:** Via single wires AWG 18, 20 or AWG 22, TR 64, speed signal and control input AWG 22
- **Highlights:** Highly efficient and smoothly operating 3-phase fan drive
  Housing with grounding lug for screw M4 x 8 (Torx)
- **Weight:** 1000 g

1) Fiberglass-reinforced plastic

- **Possible special versions:**
  (See chapter DC fans - specials)
  - Speed signal
  - Go / NoGo alarm
  - Alarm with speed limit
  - External temperature sensor
  - Internal temperature sensor
  - PWM control input
  - Analog control input
  - Multi-option control input
  - Moisture protection
  - Salt spray protection
  - Degree of protection: IP 54

Series 2200 FTD

Nominal data	Air flow	Air flow	Nominal voltage	Voltage range	Sound pressure level	Sound power level	Sintec sleeve bearings / Ball bearings	Power consumption*	Nominal speed	Temperature range	Service life L_{10} (40 °C) ebm-papst standard / Service life L_{10} (T_{max}) ebm-papst standard	Life expectancy L_{10IPC} (40 °C) see page 17	Curve
Type	**m³/h**	**cfm**	**VDC**	**VDC**	**dB(A)**	**Bel(A)**	□ / ■	**Watts**	**rpm⁻¹**	**°C**	**Hours**	**Hours**	
2214 F/2 TDHO	790	465	**24**	16...30	62	7.1	■	35	4250	-20...+75	90 000 / 42 500	152 500	①
2214 F/2 TDHHO	940	553	**24**	16...36	66	7.4	■	48	5000	-20...+70	85 000 / 42 500	142 500	②
2218 F/2 TDHO	790	465	**48**	36...57	62	7.1	■	35	4250	-20...+75	90 000 / 42 500	152 500	①
2218 F/2 TDHHO	940	553	**48**	36...72	66	7.4	■	48	5000	-20...+70	85 000 / 42 500	142 500	②
2218 F/2 TDH4P	1220	718	**48**	36...72	72	8.2	■	103	6500	-20...+65	70 000 / 40 000	117 500	③

Subject to change

Speed control range from 1000 rpm⁻¹ up to maximum nominal speed.
Standstill at 0% PWM, Type O: standstill if control wire is interrupted; Type P: maximum speed if control wire is interrupted.
* Power consumption at free air flow. These values can be significantly higher in the operating point.

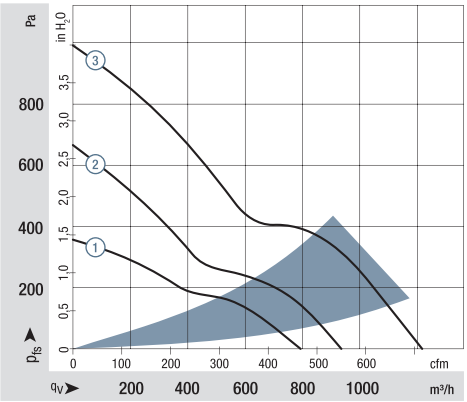

Air performance measured according to: ISO 5801.
Installation category A, without contact protection.
Noise: Total sound power level L_{WA} ISO 103002 measured on a hemisphere with a radius of 2 m.
Sound pressure level L_{pA} measured at 1 m distance from fan axis.
The values given are applicable only under the specified measuring conditions and may differ depending on the installation conditions.
In the event of deviation from the standard configuration, the parameters must be checked after installation!
For detailed information see http://www.ebmpapst.com/general conditions

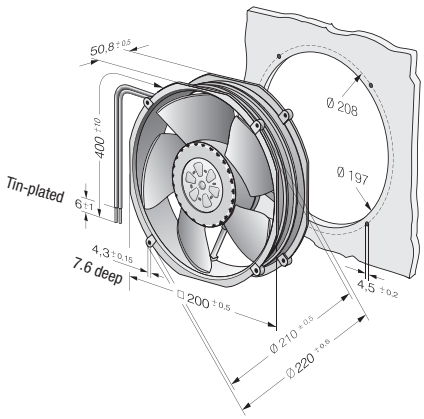

Max. 1245 m³/h

DC diagonal module

☐ 225 x 80 mm

- **Material:** Housing and support bracket: Fiberglass-reinforced plastic (PA6)
  Impeller: Fiberglass-reinforced plastic (PA6)
  Rotor: Painted black
- **Number of blades:** 7
- **Direction of air flow:** "V"
- **Direction of rotation:** Clockwise, looking towards rotor
- **Degree of protection:** Ⓐ Ⓒ IP 44, Ⓑ Ⓓ IP 20, depending on installation and position
- **Insulation class:** "B"
- **Installation position:** Any
- **Condensation drainage holes:** Ⓐ Ⓒ none, Ⓑ Ⓓ seen on rotor
- **Mode of operation:** Continuous operation (S1)
- **Bearings:** Maintenance-free ball bearings

Nominal data		Curve	Nominal voltage	Nominal voltage range	Air flow	Nominal speed	Power consumption	Input current	Sound power level	Admissible amb. temp.	Weight	Technical features and connection diagram
Type	**Motor**		**VDC**	**VDC**	**m³/h**	**rpm⁻¹**	**W**	**A**	**dB(A)**	**°C**	**kg**	
K1G 200-AD65-04	M1G 074-BF	Ⓐ	24	16...28	1020	3 400	95	4.7	76	-25...+60	1.8	p. 262 / J5)
K1G 200-AD31-02	M1G 074-BF	Ⓑ	24	16...28	1045	3 500	110	5.4	77	-25...+70	1.7	p. 262 / J5)
K1G 200-AD49-04	M1G 074-BF	Ⓒ	48	36...57	1095	3 650	120	3.4	77	-25...+60	1.8	p. 262 / J5)
K1G 200-AD37-02	M1G 074-BF	Ⓓ	48	36...57	1245	4 140	183	5.6	81	-25...+70	1.7	p. 262 / J5)

Subject to change

Curves:

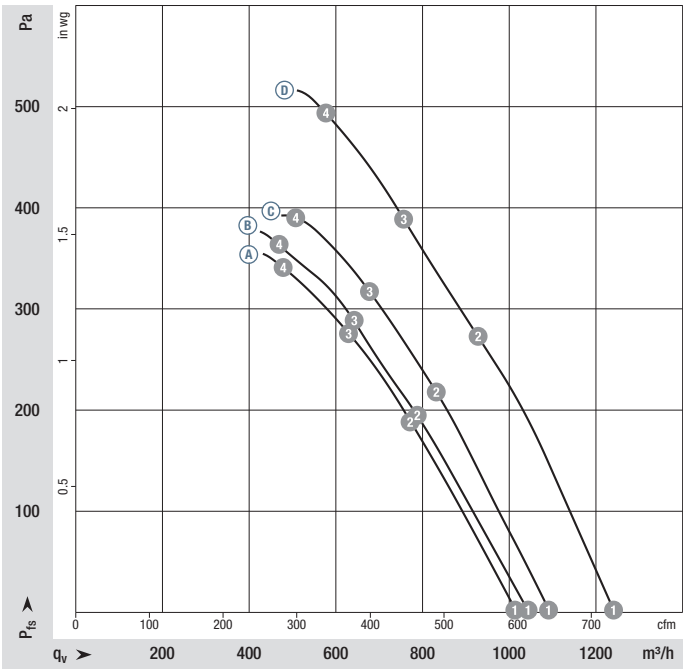

		n rpm⁻¹	P_{ed} W	I A	L_WA dB(A)
Ⓐ	1	3400	95	4.70	76
Ⓐ	2	3410	116	5.61	74
Ⓐ	3	3410	119	5.75	74
Ⓐ	4	3410	117	5.62	76
Ⓑ	1	3500	110	5.40	77
Ⓑ	2	3510	127	6.24	75
Ⓑ	3	3510	129	6.31	75
Ⓑ	4	3510	125	6.15	76
Ⓒ	1	3650	120	3.40	77
Ⓒ	2	3645	141	3.90	75
Ⓒ	3	3640	145	3.99	76
Ⓒ	4	3645	141	3.88	80
Ⓓ	1	4140	183	5.60	81
Ⓓ	2	4080	212	6.46	79
Ⓓ	3	4060	213	6.52	79
Ⓓ	4	4105	211	6.43	80

Air performance measured according to: ISO 5801. Installation category A, without contact protection. Suction-side noise levels: LWA according to ISO 13347, LpA measured at 1 m distance from fan axis. The values given are applicable only under the specified measuring conditions and may differ depending on the installation conditions. In the event of deviation from the standard configuration, the parameters must be checked after installation! For detailed information see http://www.ebmpapst.com/general conditions

ebmpapst

- **Technical features:** See connection diagram p. 262
- **EMC:** Immunity to interference according to EN 61000-6-2 (industrial environment)
  Interference emission according to EN 55022 (Class B)
- **Cable exit:** Lateral
- **Protection class:** I (with customer connection to grounding conductor)
- **Conformity with standard(s):** EN 60335-1
- **Approvals** Ⓐ Ⓒ UL 1004-1, CSA C22.2 no. 77
  Ⓑ Ⓓ EAC, UL 1004-1, CSA C22.2 no. 77

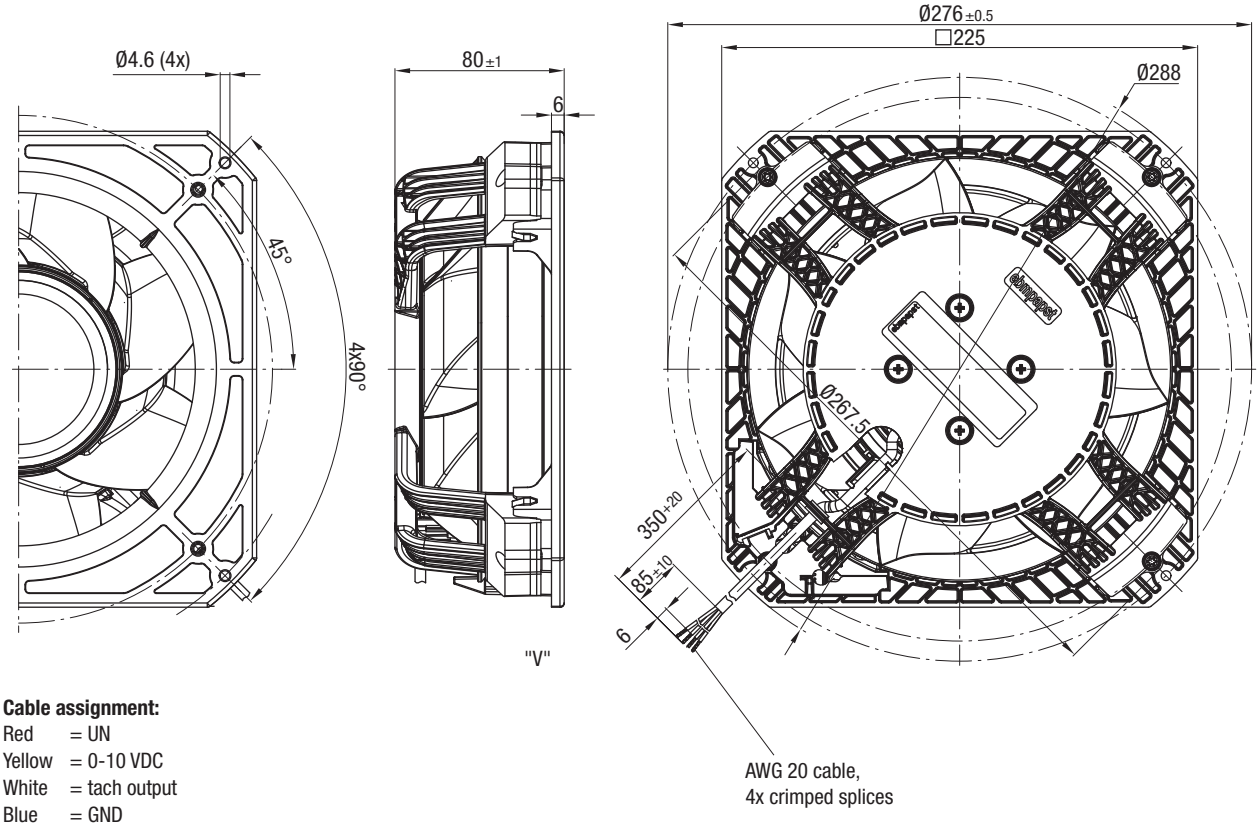

Cable assignment:

Red	= UN
Yellow	= 0-10 VDC
White	= tach output
Blue	= GND

Max. 1650 m³/h

DC diagonal module

☐ 225 x 89 mm

- **Material:** Housing and support bracket: Plastic (PA)
  Impeller: Plastic (PA)
  Rotor: Painted black
- **Number of blades:** 7
- **Direction of air flow:** "V"
- **Direction of rotation:** Clockwise, looking towards rotor
- **Degree of protection:** Ⓐ Ⓒ IP 44, Ⓑ Ⓓ IP 20, depending on installation and position
- **Insulation class:** "B"
- **Installation position:** Any
- **Condensation drainage holes:** Ⓐ Ⓒ none, Ⓑ Ⓓ seen on rotor
- **Mode of operation:** Continuous operation (S1)
- **Bearings:** Maintenance-free ball bearings

Nominal data

Type	Motor	Curve	Nominal voltage	Nominal voltage range	Air flow	Nominal speed	Power consumption	Input current	Sound power level	Admissible amb. temp.	Weight	Technical features and connection diagram
			VDC	VDC	m³/h	rpm⁻¹	W	A	dB(A)	°C	kg	
K3G 200-BD46-04	M3G 074-CF	Ⓐ	24	16...28	1240	4120	170	7.0	80	-25...+60	2.3	p. 262 / J5)
K3G 200-BD44-02	M3G 074-CF	Ⓑ	24	16...28	1445	4830	275	11.5	84	-25...+60	2.3	p. 262 / J5)
K3G 200-BD64-04	M3G 074-CF	Ⓒ	48	36...57	1475	4875	275	5.8	85	-25...+60	2.3	p. 262 / J5)
K3G 200-BDA8-02	M3G 074-CF	Ⓓ	48	36...57	1650	5470	400	8.4	88	-25...+60	2.3	p. 262 / J5)

Subject to change

Curves:

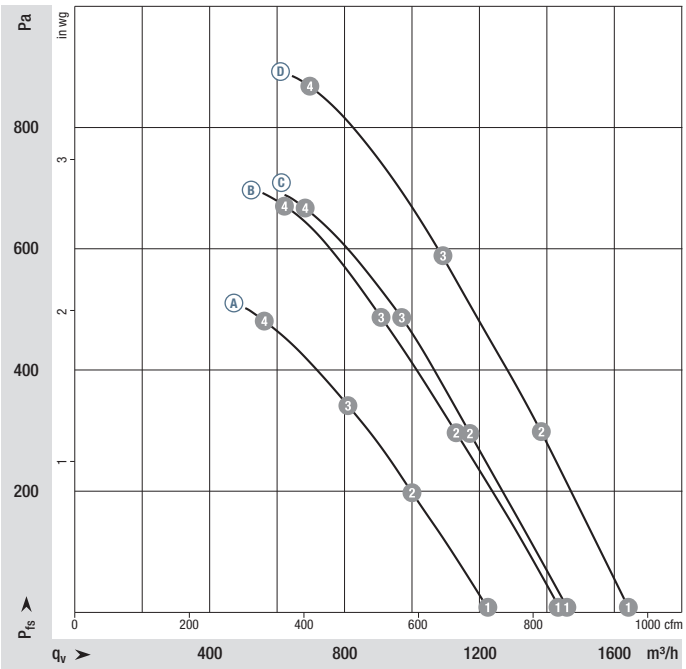

	n rpm⁻¹	P_{ed} W	I A	L_WA dB(A)
Ⓐ 1	4120	170	7.00*	80
Ⓐ 2	4025	180	7.52*	77
Ⓐ 3	4005	187	7.80*	76
Ⓐ 4	4045	187	7.78*	78
Ⓑ 1	4830	275	11.50*	84
Ⓑ 2	4720	294	12.24*	81
Ⓑ 3	4685	299	12.48*	80
Ⓑ 4	4715	295	12.30*	83
Ⓒ 1	4875	275	5.80*	85
Ⓒ 2	4795	300	6.27*	81
Ⓒ 3	4755	307	6.41*	80
Ⓒ 4	4780	304	6.35*	82
Ⓓ 1	5470	400	8.40*	88
Ⓓ 2	5365	426	8.89*	85
Ⓓ 3	5310	438	9.17*	83
Ⓓ 4	5355	431	9.01*	87

* Current measured at nominal voltage.

Air performance measured according to: ISO 5801. Installation category A, without contact protection. Suction-side noise levels: LWA according to ISO 13347, LpA measured at 1 m distance from fan axis. The values given are applicable only under the specified measuring conditions and may differ depending on the installation conditions. In the event of deviation from the standard configuration, the parameters must be checked after installation! For detailed information see http://www.ebmpapst.com/general conditions

ebmpapst

- **Technical features:** See connection diagram p. 262
- **EMC (48 V):** Immunity to interference according to EN 61000-6-2 (industrial environment)
  Interference emission according to EN 55022 (Class B, household environment)
- **Cable exit:** Lateral
- **Conformity with standard(s):** EN 60335-1
- **Approvals:** (24 V) EAC
  (48 V) EAC, CCC

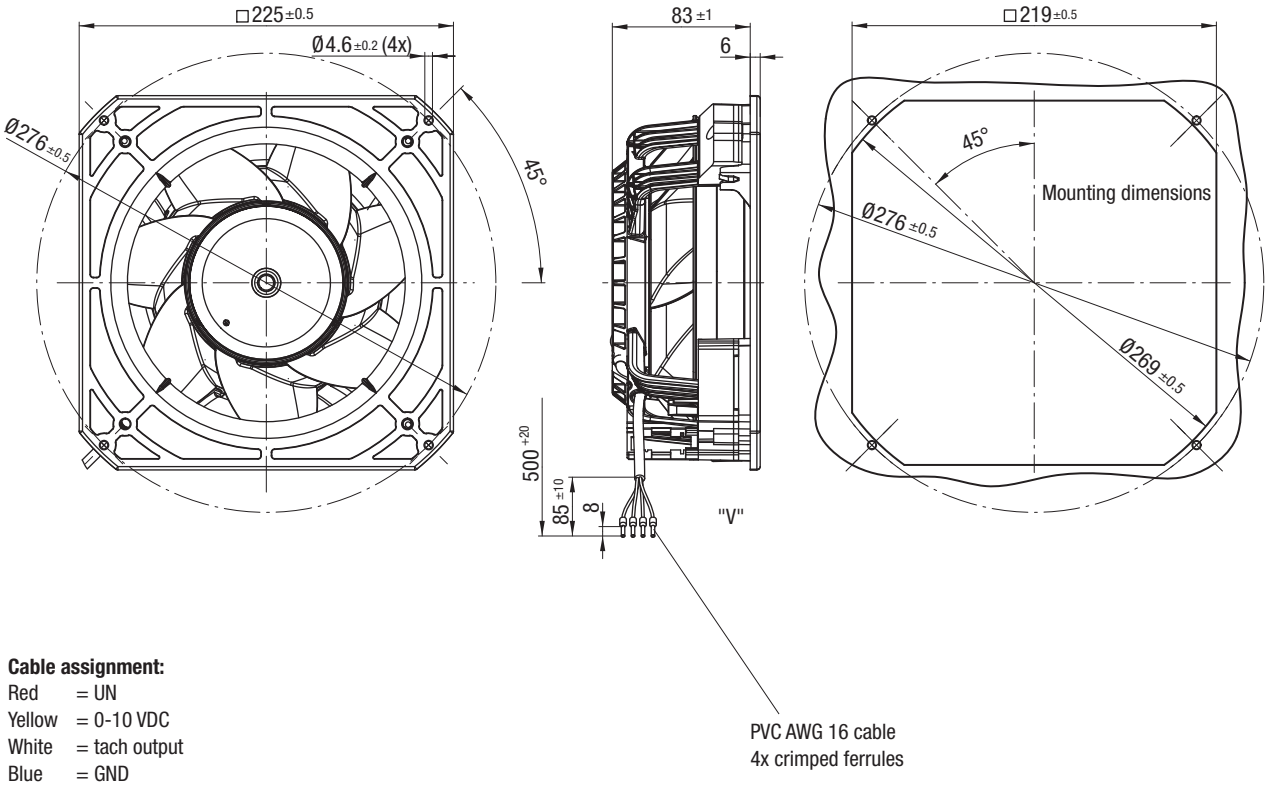

Cable assignment:

Red	= UN
Yellow	= 0-10 VDC
White	= tach output
Blue	= GND

Max. 2070 m³/h

DC axial fans

Ø 250 mm

- **Material:** Fan housing: Die-cast aluminum
  Blades: Plastic (PP)
  Rotor: Thick-film passivated
- **Number of blades:** 7
- **Direction of air flow:** "V"
- **Direction of rotation:** Counterclockwise, looking towards rotor
- **Insulation class:** "B"
- **Installation position: Any**
- **Condensation drainage holes:** On rotor side
- **Mode of operation:** Continuous operation (S1)
- **Bearings:** Maintenance-free ball bearings

Nominal data		Curve	Nominal voltage	Nominal voltage range	Air flow	Nominal speed	Power consumption	Input current	Max. back-pressure	Admissible amb. temp.	Technical features and connection diagram
Type	**Motor**		**VDC**	**VDC**	**m³/h**	**rpm⁻¹**	**W**	**A**	**Pa**	**°C**	
W1G250-HJ87 -02	M1G074-BF	A	24	16-28	2070	3090	120	7.00	150	-25...+60	p. 258 / E)
W1G250-HJ63 -02	M1G074-BF	B	48	36-57	2070	3090	120	3.40	150	-25...+60	p. 258 / E)

Subject to change

Curves:

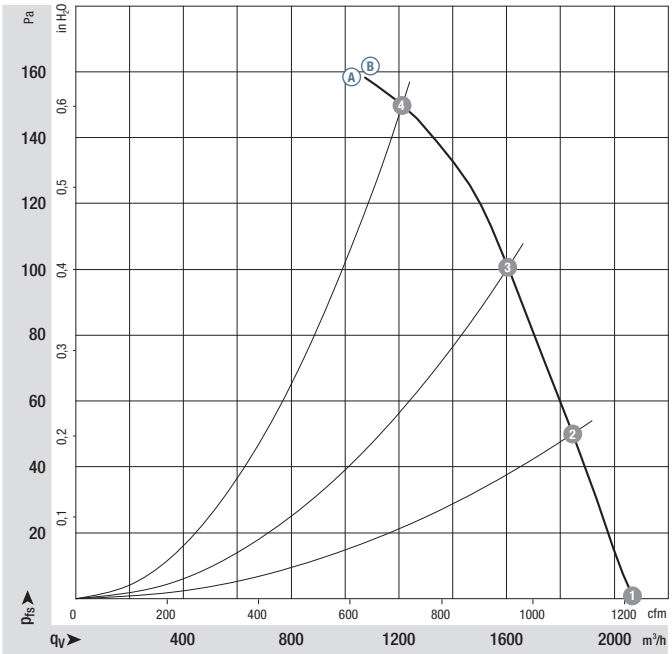

		n rpm⁻¹	P_{ed} W	I A	L_WA dB(A)
A	1	3090	120	6.80	74
A	2	2950	124	7.10	73
A	3	2820	127	7.43	73
A	4	2730	130	7.80	78
B	1	3090	120	3.40	74
B	2	2950	124	3.55	73
B	3	2820	127	3.74	73
B	4	2730	130	3.90	78

Air performance measured according to: ISO 5801. Installation category A, without contact protection. Suction-side noise levels: LWA according to ISO 13347, L_pA measured at 1 m distance from fan axis. The values given are applicable only under the specified measuring conditions and may differ depending on the installation conditions. In the event of deviation from the standard configuration, the parameters must be checked after installation! For detailed information see http://www.ebmpapst.com/general conditions

ebmpapst

- **Technical features:** See connection diagram p. 258
- **EMC:** Interference emission acc. to EN 55022 (Class B)
  Immunity to interference acc. to EN 61000-6-2 (industrial environment)
- **Electrical hookup:** Via terminal strip
- **Protection class:** I
- **Conformity with standard(s):** EN 60950-1

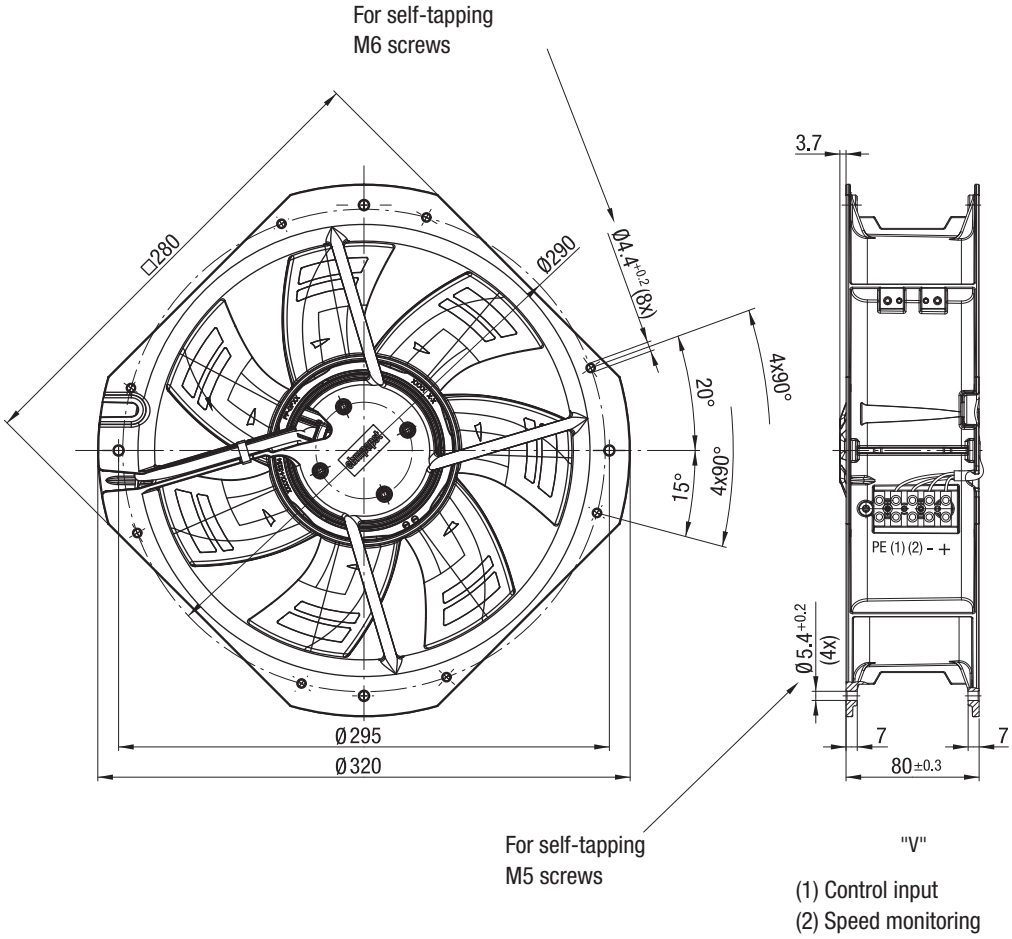

Max. 2345 m³/h

DC axial fans – HyBlade®

Ø 300 mm

- **Material:** Finger guard: Steel, phosphated and coated in black plastic
  Fan housing: Sheet steel, pre-galvanized and coated in black plastic
  Blades: Plastic (PP)
  Rotor: Painted black
- **Number of blades:** 5
- **Direction of air flow:** "V"
- **Direction of rotation:** Counterclockwise, looking towards rotor
- **Degree of protection:** IP 42
- **Insulation class:** "B"
- **Installation position:** Any
- **Condensation drainage holes:** None
- **Mode of operation:** Continuous operation (S1)
- **Bearings:** Maintenance-free ball bearings

Nominal data		Curve	Nominal voltage	Nominal voltage range	Air flow	Nominal speed	Power consumption	Input current	Max. back-pressure	Admissible amb. temp.	Technical features and connection diagram
Type	Motor		VDC	VDC	m³/h	rpm⁻¹	W	A	Pa	°C	
*1G 300	M1G 074-CF	A	24	16-28	2320	1830	80	3.80	100	-25..+60	p. 262 / J5)
*1G 300	M1G 074-CF	B	48	36-57	2345	1830	80	1.90	100	-25..+60	p. 262 / J5)

Subject to change

Curves:

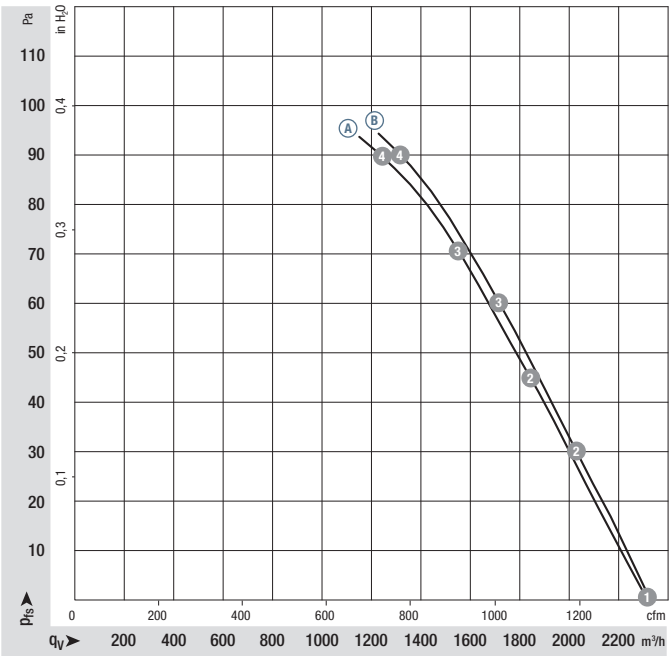

		n rpm⁻¹	P_{ed} W	I A	L_WA dB(A)
A	1	1810	80	3.80	67
A	2	1730	86	4.03	67
A	3	1690	87	4.10	66
A	4	1635	89	4.21	70
B	1	1870	87	2.00	68
B	2	1805	90	2.10	67
B	3	1765	91	2.13	67
B	4	1695	92	2.19	69

Air performance measured according to: ISO 5801, installation category A, in ebm-papst full nozzle without contact protection. Suction-side noise levels: LWA according to ISO 13347, L_pA measured at 1 m distance from fan axis. The values given are applicable only under the specified measuring conditions and may differ depending on the installation conditions. In the event of deviation from the standard configuration, the parameters must be checked after installation! For detailed information see http://www.ebmpapst.com/general conditions

ebmpapst

- **Technical features:** See connection diagram p. 262
- **EMC:** Interference emission acc. to EN 55022 (Class B)
  Immunity to interference acc. to EN 61000-6-2 (industrial environment)
- **Cable exit:** Lateral
- **Conformity with standard(s):** EN 60950-1, UL 1004-1, CSA C22.2 no. 100
- **Approvals:** GOST, UL

Airflow direction	"V" without attachments	Weight without attachments kg	"V" With full round nozzle	Weight with full round nozzle kg	"V" With finger guard for short nozzle	Weight with finger guard for short nozzle kg
"V"	A1G 300-AC19 -54	1.8	W1G 300-DC19 -54	3.8	S1G 300-AC19 -54	2.8
"V"	A1G 300-AC33 -54	1.8	W1G 300-DC33 -54	3.8	S1G 300-AC33 -54	3.1

A1G 300

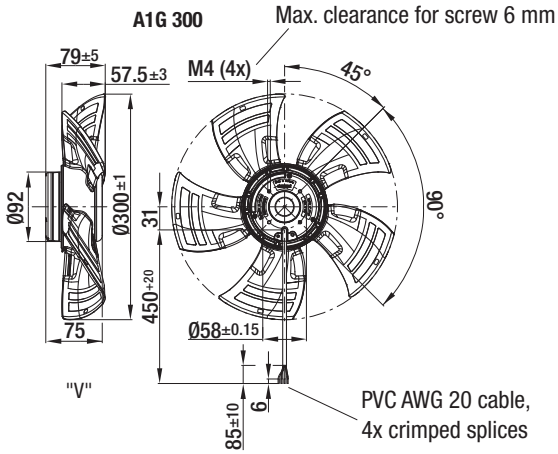

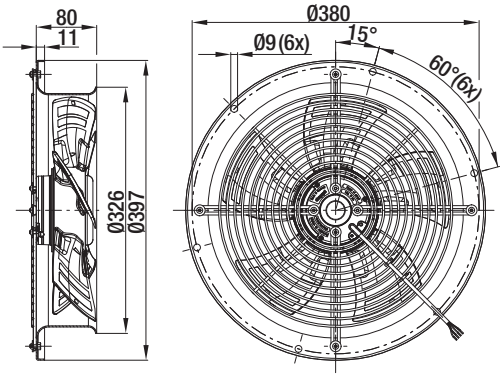

W1G 300

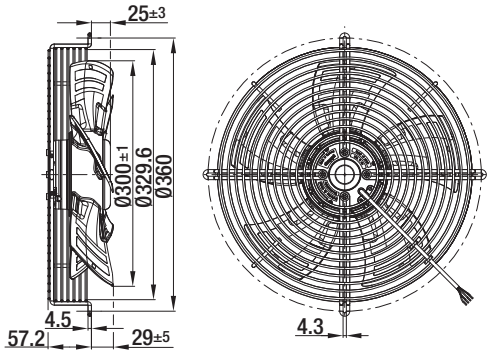

S1G 300

DC centrifugal fans

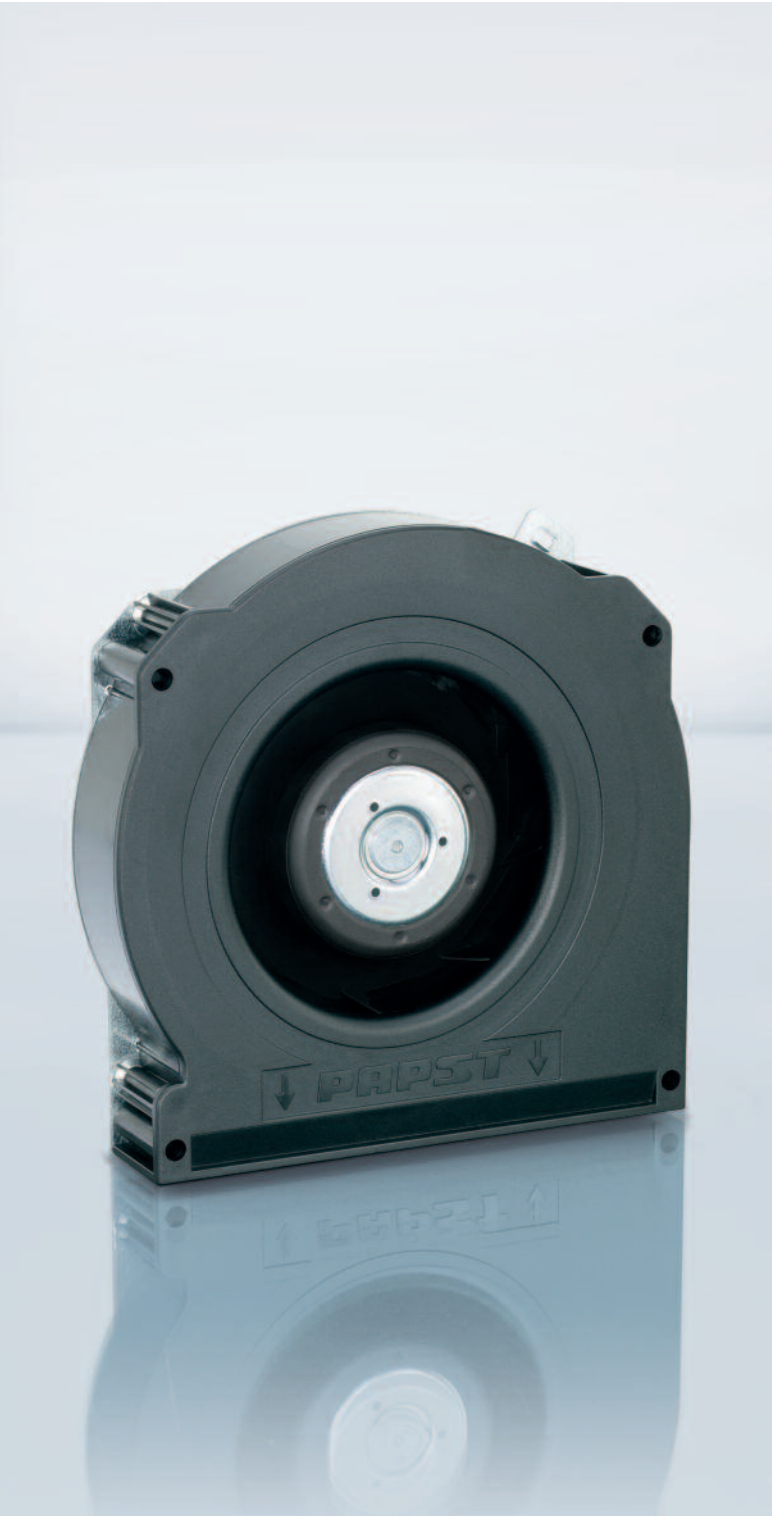

DC centrifugal fans

Technical information

Product line
Our centrifugal product line includes fans for every application. Whether as free-running impellers with a diameter between 97 mm and 225 mm, or as assemblies in a ready-to-install, compact housing with inlet ring with an edge length between 51 mm and 270 mm. Of course, all models feature highly efficient, brushless motor technology.

Electronic protection against reverse polarity
ebm-papst DC fans have electronically commutated drives with electronic protection against reverse polarity. The electronics are integrated in the fan's impeller hub to save space.

Product life expectancy
A distinctive feature of DC fan technology is the amazing product life expectancy. The outstanding efficiency of the brushless drive results in lower heat stress for the bearings, which significantly increases the service life of the fan.

Degree of protection
DC fans with sleeve and ball bearings are powered by class E insulated motors. All ebm-papst fans conform to the requirements of degree of protection IP 20. Fans conforming to IP 54 / IP 68 and special degrees of protection are also available.

Voltage range
Many of our DC fans can be operated on voltages that are up to 50% lower and 25% higher than their nominal voltage (see voltage range in the technical tables). This allows the air performance to be adapted to the cooling requirements and the noise to be reduced, even if the fan does not have a control input.

Closed-loop speed control and monitoring
Closed-loop speed control and function monitoring are becoming increasingly important in many applications. ebm-papst offers many fans in the standard design with a control input and open-collector speed signal.

S-Force centrifugal RadiCal
The new S-Force centrifugal fans provide peak performance among fans of this type. With air flow capacity of over 1500 m³/h and a pressure increase of up to 1000 pascals, the highest heat flows are manageable. The models are extremely efficient due to the multi-pole, electronically commutated drive motors, and can be adapted individually to every application thanks to intelligent motor features. Some models use our new, highly efficient RadiCal impellers.

Centrifugal fans for DC operation

Overview of air performance

	Dimension	Series	Air flow	Page
	mm		m³/h	
	105 x 59 x 79	RV 40	18...24	95
	☐ 51 x 15	RLF 35	9.6	96
	☐ 76 x 27	RL 48	22...28	97
	97 x 93.5 x 33	RL 65	56...61	98
	☐ 121 x 37	RL 90 N	40...55	99
	☐ 127 x 25	RLF 100	64...80	100
	☐ 135 x 38	RG 90 N	55	101
	☐ 180 x 40	RG 125 N	60...137	102
	☐ 180 x 40	RG 140 NTD	118	103
	☐ 220 x 56	RG 160 N	139...209	104
	☐ 220 x 56	RG 160 NTD	59...444	105
S-Force	☐ 226 x 85	RG 190 TD	630...930	106
S-Force	☐ 270 x 99	RG 220 TD	1090...1100	107
S-Force	☐ 270 x 119	RG 225 TD	1040...1450	108
S-Force	Ø 97 x 41	RET 97 TD	220	109
	Ø 104 x 25	REF 100	86...104	110
	Ø 101 x 52	RER 101 N	162...190	111
S-Force	Ø 120 x 54	RER 120 TD	320...390	112
	Ø 120	R1G 120	250	114
	Ø 138 x 35	RER 125 N	110...166	116
S-Force	Ø 133 x 91	RER 133 TD	460...565	117
	Ø 165 x 51	RER 160 N	255	118
S-Force	Ø 165 x 51	RER 160 NTD	360	119
S-Force	Ø 175 x 55	REF 175 TD	800	120
S-Force	Ø 175 x 69	RER 175 TD	600...980	121
S-Force	Ø 190 x 69	RER 190 TD	650...970	122
	Ø 190	R3G 190	880...930	124
	Ø 220	R3G 220	1200...1215	126
S-Force	Ø 220 x 71	RER 220 TD	1063...1250	128
S-Force	Ø 225 x 99	RER 225 TD	1190...1600	129
	Ø 225	R3G 225	1300...1340	130
	Ø 250	R3G 250	1505...1640	132
	Ø 280	R3G 280	2160...2190	134
	Ø 310	R3G 310	2310...2380	136
	201...413 x 50 x 48	QG 030	75...155	138
	Ø 85	*1G 085	95	140
	Ø 97	*1G 097	95	142
	Ø 108	*1G 108	200	144
	Ø 120	*1G 120	255	146
	Ø 133	*1G 133	225	148
	Ø 140	*1G 140	400...410	150
	Ø 146	*1G 146	465...470	152
	Ø 160	*1G 160	505	154
	Ø 133	D1G 133	700	156
	Ø 133	D1G 133	1020	158
	Ø 146	D1G 146	1000	160
	Ø 160	D1G 160	980	162

Subject to change

Centrifugal fans for DC operation

Overview of technically feasible designs

	Dimension		VDE, UL, CSA	SINTEC sleeve bearings / ball bearings	Speed signal	Go / NoGo alarm	Alarm with speed limit	External temperature sensor	Internal temperature sensor	PWM control input	Analog control input	Multi-options control input	Moisture protection	IP >= 54	IP 68	Salt spray protection	Page
Centrifugal fans																	
	mm	**Series**							**OPTIONAL**								**P.**
	105 x 59 x 79	RV 40	•	■	•	–	–	–	–	–	–	–	•	–	–	–	95
	☐ 51 x 15	RLF 35	yes	■	•	–	–	–	–	•	–	–	•	–	–	–	96
	☐ 76 x 27	RL 48	yes	■	•	•	•	•	•	•	•	–	•	–	–	–	97
	97 x 93.5 x 33	RL 65	yes	■	•	•	•	•	•	•	•	–	•	–	–	–	98
	☐ 121 x 37	RL 90 N	yes	□/■	•	•	•	•	•	•	•	–	•	•	•	•	99
	☐ 127 x 25	RLF 100	yes	■	•	•	•	•	•	•	•	–	•	•	–	–	100
	☐ 135 x 38	RG 90 N	yes	□/■	•	•	•	•	•	•	•	–	•	•	•	•	101
	☐ 180 x 40	RG 125 N	yes	■	•	•	•	•	•	•	•	–	•	•	•	•	102
NEW	☐ 180 x 40	RG 140 NTD	yes	■	•	•	•	•	–	•	•	•	•	•	•	•	103
	☐ 220 x 56	RG 160 N	yes	■	•	•	•	•	•	•	•	–	•	•	–	•	104
	☐ 220 x 56	RG 160 NTD	yes	■	•	•	•	•	•	•	•	–	•	•	–	•	105
S-Force	☐ 226 x 85	RG 190 TD	yes	■	•	•	•	•	•	•	•	•	•	•	–	•	106
S-Force	☐ 270 x 99	RG 220 TD	yes	■	•	•	•	•	•	•	•	–	•	•	–	•	107
S-Force	☐ 270 x 132	RG 225 TD	yes	■	•	•	•	•	•	•	•	–	•	•	–	•	108
S-Force	Ø 97 x 41	RET 97 TD	yes	■	•	•	•	•	•	•	•	–	•	–	–	–	109
	Ø 100 x 25	REF 100	yes	■	•	•	•	•	•	•	•	–	•	•	–	–	110
	Ø 101 x 52	RER 101 N	yes	■	•	•	•	•	•	•	•	–	•	–	–	–	111
S-Force	Ø 120 x 54	RER 120 TD	yes	■	•	•	•	•	•	•	•	–	•	–	–	–	112
	Ø 138 x 35	RER 125 N	yes	■	•	•	•	•	•	•	•	–	•	•	•	•	116
S-Force	Ø 133 x 91	RER 133 TD	yes	■	•	•	•	•	•	•	•	•	•	•	–	•	117
	Ø 165 x 51	RER 160 N	yes	■	•	•	•	•	•	•	•	–	•	•	–	•	118
S-Force	Ø 165 x 51	RER 160 NTD	yes	■	•	•	•	•	•	•	•	–	•	•	–	–	119
S-Force	Ø 175 x 55	REF 175 TD	yes	■	•	•	•	•	•	•	•	•	•	•	–	–	120
S-Force	Ø 175 x 69	RER 175 TD	yes	■	•	•	•	•	•	•	•	•	•	•	–	•	121
S-Force	Ø 190 x 69	RER 190 TD	yes	■	•	•	•	•	•	•	•	•	•	•	–	•	122
S-Force	Ø 220 x 71	RER 220 TD	yes	■	•	•	•	•	•	•	•	•	•	•	–	•	128
S-Force	Ø 225 x 99	RER 225 TD	yes	■	•	•	•	•	•	•	•	•	•	•	–	•	129
	201...413 x 50 x 48	QG 030	yes	□/■	•	–	–	–	–	–	–	–	•	–	–	–	138
	Subject to change																

– Not yet available □ Sleeve bearings
• Available ■ Ball bearings

Please note that these special versions are not possible for all voltages and speeds, and not in all combinations. The special versions are designed for specific customers and projects. As a rule they are not available off the shelf and are subject to minimum volumes.

Please consult your customer support representative about the feasibility of your special variant.

Optional special versions (see page 12)

On the catalog pages and in the overview on page 12, we provide information about the special designs that are technically feasible in the fan series. Please note that these special versions are not possible for all voltages and speeds, and not in all combinations. The special versions are designed for specific customers and projects and are usually not available off the shelf.

ebmpapst

Max. 24 m³/h

DC centrifugal fans

105 x 59 x 79 mm

- **Material:** Scroll housing: GRP[1)]
  Impeller: GRP[1)]
- **Direction of air flow:** Axial: Intake,
  Centrifugal: Exhaust
- **Connection:** via single wires AWG 26, TR 64
- **Highlights:** Forward-curved impeller
- **Weight:** 100 g

- **Possible special versions:**
  (See chapter DC fans - specials)
  - Speed signal
  - Moisture protection

1) Fiberglass-reinforced plastic

Series RV 40

Nominal data

Type	Air flow m³/h	Air flow cfm	**Nominal voltage VDC**	Voltage range VDC	Sound power level Bel(A)	Sintec sleeve bearings □ / Ball bearings ■	Power consumption Watts	Nominal speed rpm⁻¹	Temperature range °C	Service life L_{10} (40 °C) ebm-papst standard Hours	Service life L_{10} (T_{max}) ebm-papst standard Hours	Life expectancy L_{10IPC} (40 °C) see page 17 Hours	Curve
RV 40-18/12 L	18	10.6	**12**	9...16	4.0	■	2.0	3 900	-20...+70	70 000 / 35 000		117 500	①
RV 40-18/12 H	24	14.1	**12**	9...16	5.0	■	4.5	4 800	-20...+70	50 000 / 25 000		85 000	②

Subject to change

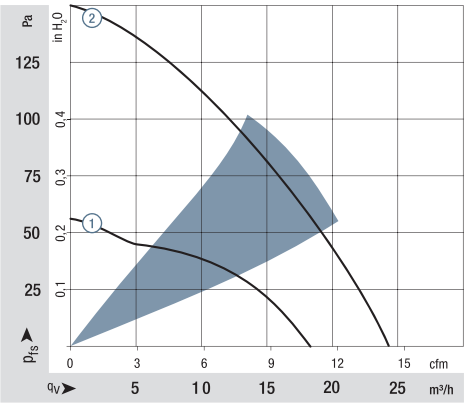

Air performance measured according to:
ISO 5801.
Installation category A, without contact protection.
Noise: Total sound power level L_WA ISO 103002 measured on a hemisphere with a radius of 2 m;
Sound pressure level L_pA measured at 1 m distance from fan axis.
The acoustic values are only valid for the described measurement setup and may vary depending on the installation situation.
In the event of deviation from the standard configuration, the parameters must be checked after installation!
For detailed information see
http://www.ebmpapst.com/general conditions

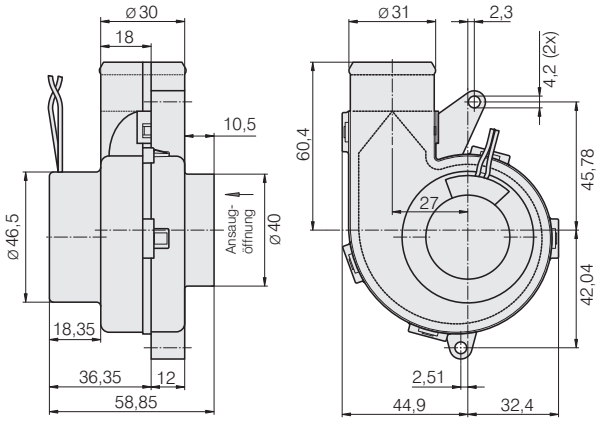

Max. **9.6** m³/h

DC centrifugal fans

☐ 51 x 15 mm

- **Material:** Scroll housing: GRP[1)]
  Impeller: GRP[1)]
- **Direction of air flow:** Axial: Intake,
  Centrifugal: Exhaust
- **Connection:** via single wires AWG 26, TR 64
- **Highlights:** Forward-curved impeller
- **Weight:** 40 g

- **Possible special versions:**
  (See chapter DC fans - specials)
  - Speed signal - PWM control input
  - Moisture protection

1) Fiberglass-reinforced plastic

Series RLF 35 **Nominal data**	Air flow	Air flow	**Nominal voltage**	Voltage range	Sound power level	Sintec sleeve bearings Ball bearings	Power consumption	Nominal speed	Temperature range	Service life L_{10} (40 °C) ebm-papst standard Service life L_{10} (T_{max}) ebm-papst standard	Life expectancy L_{10IPC} (40 °C) see page 17	Curve
Type	**m³/h**	**cfm**	**VDC**	**VDC**	**Bel(A)**	**☐/■**	**Watts**	**rpm⁻¹**	**°C**	**Hours**	**Hours**	
RLF 35-8/12 N	9.6	5.64	**12**	8...13.2	5.5	■	3.5	6 700	-20...+70	60 000 / 30 000	102 500	①
RLF 35-8/14 N	9.6	5.64	**24**	14...28	5.5	■	4.3	6 700	-20...+70	60 000 / 30 000	102 500	①

Subject to change

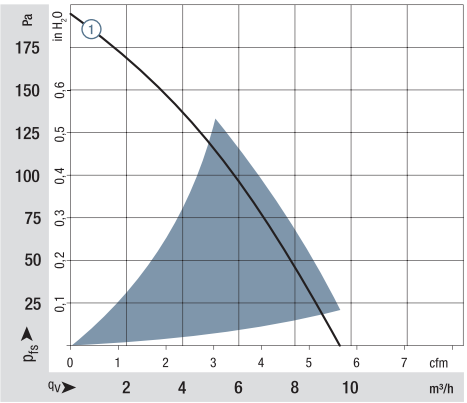

Air performance measured according to: ISO 5801.
Installation category A, without contact protection.
Noise: Total sound power level L_{WA} ISO 103002 measured on a hemisphere with a radius of 2 m.
Sound pressure level L_{pA} measured at 1 m distance from fan axis.
The values given are applicable only under the specified measuring conditions and may differ depending on the installation conditions.
In the event of deviation from the standard configuration, the parameters must be checked after installation!
For detailed information see
http://www.ebmpapst.com/general conditions

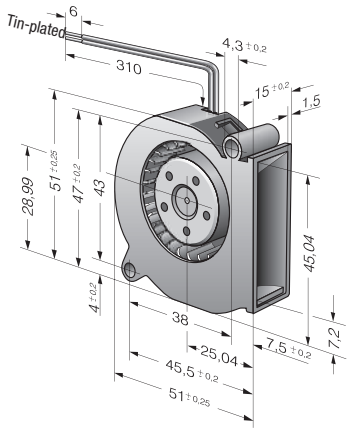

ebmpapst

Max. 28 m³/h

DC centrifugal fans

☐ 76 x 27 mm

- **Material:** Scroll housing: GRP[1)]
  Impeller: GRP[1)]
- **Direction of air flow:** Axial: Intake,
  Centrifugal: Exhaust
- **Connection:** via single wires AWG 26, TR 64
- **Highlights:** Forward-curved impeller
- **Weight:** 75 g

- **Possible special versions:**
  (See chapter DC fans - specials)
  - Speed signal
  - Go- / NoGo alarm
  - Alarm with speed limit
  - External temperature sensor
  - Internal temperature sensor
  - PWM control input
  - Analog control input
  - Moisture protection

1) Fiberglass-reinforced plastic

Series RL 48 **Nominal data**	Air flow	Air flow	**Nominal voltage**	Voltage range	Sound power level	Sintec sleeve bearings Ball bearings	Power consumption	Nominal speed	Temperature range	Service life L_{10} (40 °C) ebm-papst standard Service life L_{10} (T_{max}) ebm-papst standard	Life expectancy L_{10IPC} (40 °C) see page 17	Curve
Type	**m³/h**	**cfm**	**VDC**	**VDC**	**Bel(A)**	**☐ / ■**	**Watts**	**rpm⁻¹**	**°C**	**Hours**	**Hours**	
RL 48-19/12 ML	22	12.9	**12**	8...15	5.3	■	5.0	3 500	-20...+70	70 000 / 35 000	117 500	①
RL 48-19/12	28	16.5	**12**	8...13.5	5.7	■	4.6	4 400	-20...+70	60 000 / 30 000	102 500	②
RL 48-19/14 ML	22	12.9	**24**	18...28	5.3	■	5.0	3 500	-20...+70	70 000 / 35 000	117 500	①
RL 48-19/14	28	16.5	**24**	18...26.4	5.7	■	4.4	4 400	-20...+70	60 000 / 30 000	102 500	②

Subject to change

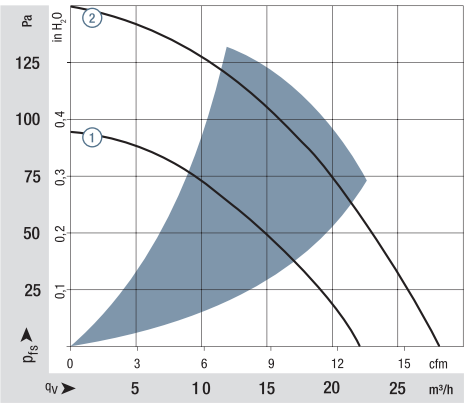

Air performance measured according to: ISO 5801.
Installation category A, without contact protection.
Noise: Total sound power level L_{WA} ISO 103002 measured on a hemisphere with a radius of 2 m.
Sound pressure level L_{pA} measured at 1 m distance from fan axis.
The values given are applicable only under the specified measuring conditions and may differ depending on the installation conditions.
In the event of deviation from the standard configuration, the parameters must be checked after installation!
For detailed information see
http://www.ebmpapst.com/general conditions

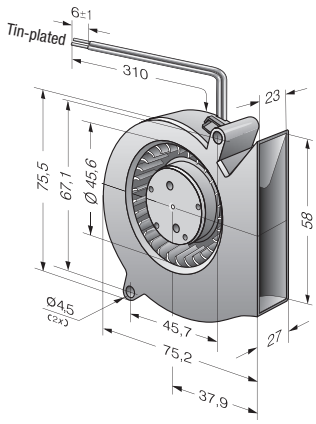

Max. 61 m³/h

DC centrifugal fans

97 x 93.5 x 33 mm

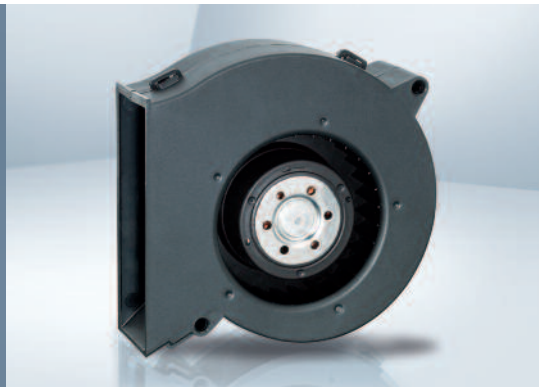

- **Material:** Scroll housing: GRP[1)]
  Impeller: GRP[1)]
- **Direction of air flow:** Axial: Intake,
  Centrifugal: Exhaust
- **Connection:** via single wires AWG 26, TR 64
- **Highlights:** Forward-curved impeller
- **Weight:** 170 g

- **Possible special versions:**
  (See chapter DC fans - specials)**:**
  - Speed signal
  - Go / NoGo alarm
  - Alarm with speed limit
  - External temperature sensor
  - Internal temperature sensor
  - PWM control input
  - Analog control input
  - Moisture protection

1) Fiberglass-reinforced plastic

Series RL 65 **Nominal data**	Air flow	Air flow	**Nominal voltage**	Voltage range	Sound power level	Sintec sleeve bearings Ball bearings	Power consumption	Nominal speed	Temperature range	Service life L_{10} (40 °C) ebm-papst standard Service life L_{10} (T_{max}) ebm-papst standard	Life expectancy L_{10IPC} (40 °C) see page 17	Curve
Type	**m³/h**	**cfm**	**VDC**	**VDC**	**Bel(A)**	□/■	**Watts**	**rpm⁻¹**	**°C**	**Hours**	**Hours**	
RL 65-21/12	56	32,9	**12**	6.8...13.8	6.6	■	15.0	4 500	-20...+70	60 000 / 30 000	102 500	①
RL 65-21/12 H	61	35,8	**12**	6.8...13.2	6.8	■	19.2	4 900	-20...+55	55 000 / 40 000	92 500	②
RL 65-21/14	56	32,9	**24**	12...26.4	6.6	■	14.0	4 500	-20...+70	60 000 / 30 000	102 500	①
RL 65-21/14 H	61	35,8	**24**	12...26.4	6.8	■	18.0	4 900	-20...+60	55 000 / 35 000	92 500	②

Subject to change

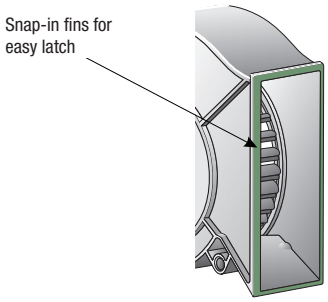

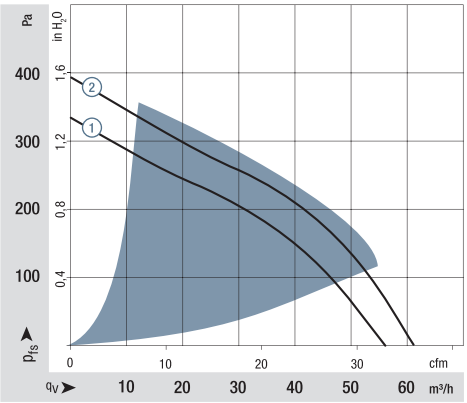

Air performance measured according to: ISO 5801.
Installation category A, without contact protection.
Noise: Total sound power level L_{WA} ISO 103002 measured on a hemisphere with a radius of 2 m.
Sound pressure level L_{pA} measured at 1 m distance from fan axis.
The values given are applicable only under the specified measuring conditions and may differ depending on the installation conditions.
In the event of deviation from the standard configuration, the parameters must be checked after installation!
For detailed information see
http://www.ebmpapst.com/general conditions

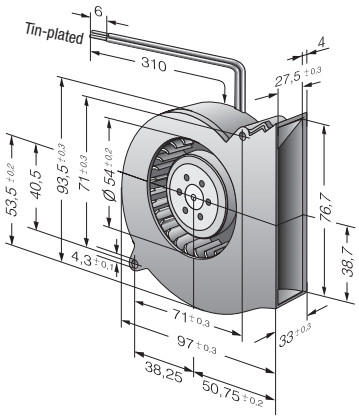

ebmpapst

Max. 55 m³/h

DC centrifugal fans

☐ 121 x 37 mm

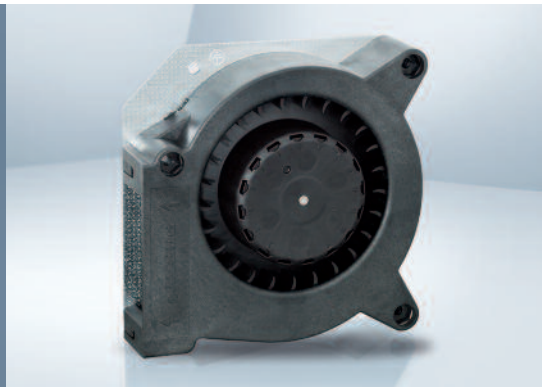

- **Material:** Scroll housing: GRP[1)]
  Impeller: GRP[1)]
  Base plate: Sheet steel
- **Direction of air flow:** Axial: Intake,
  Centrifugal: Exhaust
- **Connection:** via single wires AWG 22, TR 64
- **Highlights:** Forward-curved impeller
- **Weight:** 420 g

- **Possible special versions:**
  (See chapter DC fans - specials)
  - Speed signal
  - Go / NoGo alarm
  - Alarm with speed limit
  - External temperature sensor
  - Internal temperature sensor
  - PWM control input
  - Analog control input
  - Moisture protection
  - Salt spray protection
  - Degree of protection:IP 54 / IP 68

1) Fiberglass-reinforced plastic

Series RL 90 N

Nominal data

Type	Air flow m³/h	Air flow cfm	**Nominal voltage** VDC	Voltage range VDC	Sound power level Bel(A)	Sintec sleeve bearings ☐ / Ball bearings ■	Power consumption Watts	Nominal speed rpm⁻¹	Temperature range °C	Service life L_{10} (40 °C) ebm-papst standard Hours	Service life L_{10} (T_{max}) ebm-papst standard Hours	Life expectancy L_{10IPC} (40 °C) see page 17 Hours	Curve
RL 90-18/12 N	40	23.5	**12**	7...15	5.8	■	6.3	2 500	-30...+75	62 500 / 27 500		105 000	①
RL 90-18/14 NG	40	23.5	**24**	12...28	5.8	☐	5.6	2 500	-20...+75	62 500 / 27 500		105 000	①
RL 90-18/14 N	40	23.5	**24**	12...28	5.8	■	5.6	2 500	-30...+75	62 500 / 27 500		105 000	①
RL 90-18/18 NH	55	32.4	**48**	36...53	6.9	■	14.7	3 500	-30...+65	32 500 / 17 500		55 000	②

Subject to change

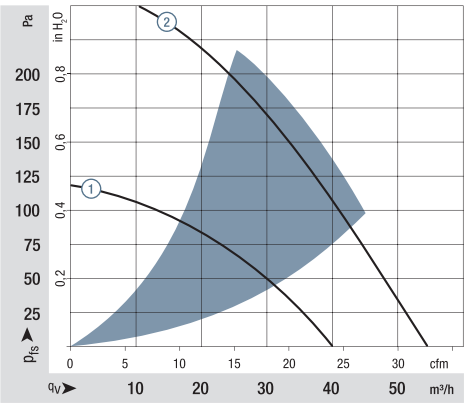

Air performance measured according to:
ISO 5801.
Installation category A, without contact protection.
Noise: Total sound power level L_WA ISO 103002 measured on a hemisphere with a radius of 2 m;
Sound pressure level L_pA measured at 1 m distance from fan axis.
The acoustic values are only valid for the described measurement setup and may vary depending on the installation situation.
In the event of deviation from the standard configuration, the parameters must be checked after installation!
For detailed information see
http://www.ebmpapst.com/general conditions

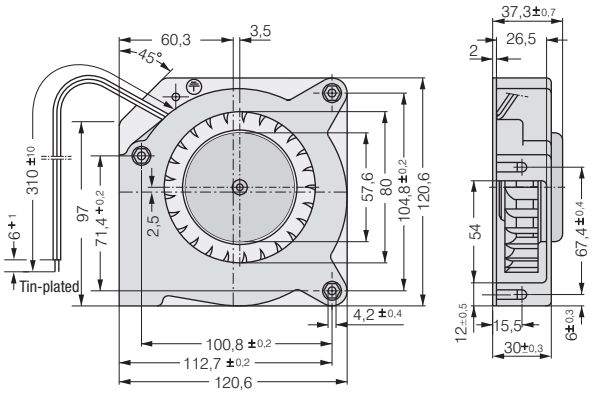

Screw clip M4 or 8-32UNC. Screw-in depth max. 12.5 min. 9.0

Max. 80 m³/h

DC centrifugal fans

☐ 127 x 25 mm

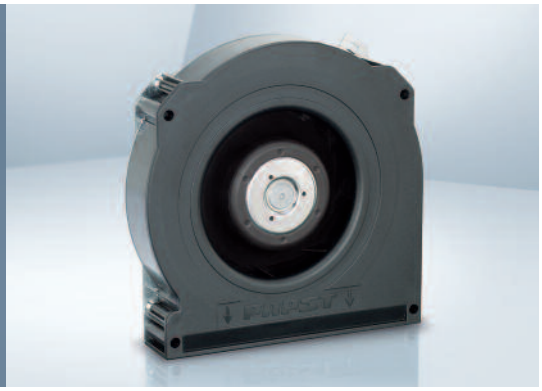

- **Material:** Scroll housing: GRP[1)]
  Impeller: GRP[1)]
  Base plate: Sheet steel
- **Direction of air flow:** Axial: Intake,
  Centrifugal: Exhaust
- **Connection:** via single wires AWG 22, TR 64
- **Highlights:** Optional protective cap for outlet opening
  Backward-curved impeller
- **Weight:** 320 g

- **Possible special versions:**
  (See chapter DC fans - specials)
  - Speed signal
  - Go / NoGo alarm
  - Alarm with speed limit
  - External temperature sensor
  - Internal temperature sensor
  - PWM control input
  - Analog control input
  - Moisture protection
  - Degree of protection: IP 54

1) Fiberglass-reinforced plastic

Series RLF 100 **Nominal data**	Air flow	Air flow	**Nominal voltage**	Voltage range	Sound power level	Sintec sleeve bearings Ball bearings	Power consumption	Nominal speed	Temperature range	Service life L_{10} (40 °C) ebm-papst standard Service life L_{10} (T_{max}) ebm-papst standard	Life expectancy L_{10IPC} (40 °C) see page 17	Curve
Type	**m³/h**	**cfm**	**VDC**	**VDC**	**Bel(A)**	**☐ / ■**	**Watts**	**rpm⁻¹**	**°C**	**Hours**	**Hours**	
RLF 100-11/12	64	37.7	**12**	8...15	6.4	■	8.0	5 100	-20...+75	80 000 / 30 000	135 000	①
RLF 100-11/14	64	37.7	**24**	16...30	6.4	■	8.0	5 100	-20...+75	80 000 / 30 000	135 000	①
RLF 100-11/18	64	37.7	**48**	36...60	6.4	■	8.6	5 100	-20...+75	80 000 / 30 000	135 000	①
High speed models with open-collector tachometer and PWM speed control.												
RLF 100-11/12/2 HP-200	80	47.1	**12**	10...13.2	7.5	■	18.6	6 400	-20...+60	72 500 / 45 000	122 500	②
RLF 100-11/18/2 HP-182	80	47.1	**48**	43...53	7.5	■	17.0	6 400	-20...+70	72 500 / 35 000	122 500	②

Subject to change

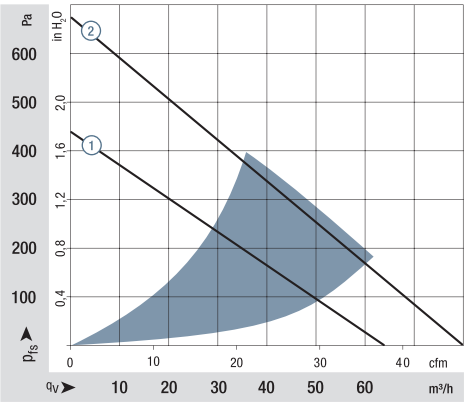

Air performance measured according to: ISO 5801.
Installation category A, without contact protection.
Noise: Total sound power level L_{WA} ISO 103002 measured on a hemisphere with a radius of 2 m.
Sound pressure level L_{pA} measured at 1 m distance from fan axis.
The values given are applicable only under the specified measuring conditions and may differ depending on the installation conditions.
In the event of deviation from the standard configuration, the parameters must be checked after installation!
For detailed information see
http://www.ebmpapst.com/general conditions

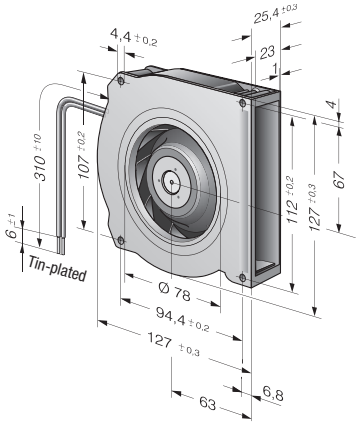

ebmpapst

Max. 55 m³/h

DC centrifugal fans

☐ 135 x 38 mm

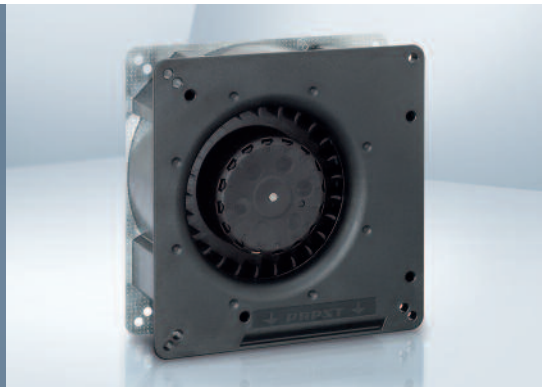

- **Material:** Scroll housing: GRP[1)]
  Impeller: GRP[1)]
  Base plate: Sheet steel
- **Direction of air flow:** Axial: Intake,
  Centrifugal: Exhaust
- **Connection:** Via single wires AWG 22, TR 64
  48 V model: Flat plug
  6.3 x 0.8 mm for ground conductor
- **Highlights:** Forward-curved impeller
- **Weight:** 440 g

- **Possible special versions:**
  (See chapter DC fans - specials)
  - Speed signal
  - Go / NoGo alarm
  - Alarm with speed limit
  - External temperature sensor
  - Internal temperature sensor
  - PWM control input
  - Analog control input
  - Moisture protection
  - Salt spray protection
  - Degree of protection: IP 54 / IP 68

1) Fiberglass-reinforced plastic

Series RG 90 N **Nominal data**	Air flow	Air flow	**Nominal voltage**	Voltage range	Sound power level	Sintec sleeve bearings Ball bearings	Power consumption	Nominal speed	Temperature range	Service life L_{10} (40 °C) ebm-papst standard Service life L_{10} (T_{max}) ebm-papst standard	Life expectancy L_{10IPC} (40 °C) see page 17	Curve
Type	**m³/h**	**cfm**	**VDC**	**VDC**	**Bel(A)**	☐/■	**Watts**	**rpm⁻¹**	**°C**	**Hours**	**Hours**	
RG 90-18/12 N	55	32.4	**12**	7...15	5.5	■	6.7	2 200	-30...+75	62 500 / 27 500	105 000	①
RG 90-18/14 NG	55	32.4	**24**	12...28	5.5	▪	6.2	2 200	-10...+75	62 500 / 27 500	105 000	①
RG 90-18/14 N	55	32.4	**24**	12...28	5.5	■	6.2	2 200	-30...+75	62 500 / 27 500	105 000	①
RG 90-18/18 N	55	32.4	**48**	36...56	5.5	■	6.1	2 200	-30...+75	62 500 / 27 500	105 000	①

Subject to change

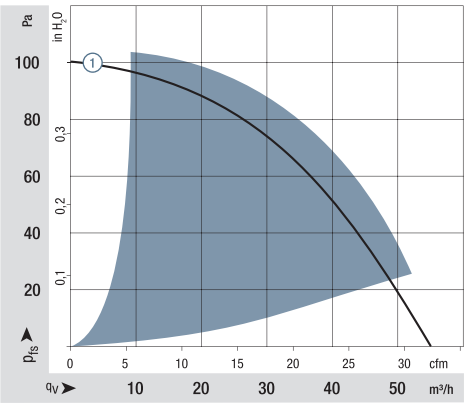

Air performance measured according to: ISO 5801.
Installation category A, without contact protection.
Noise: Total sound power level L_{WA} ISO 103002 measured on a hemisphere with a radius of 2 m.
Sound pressure level L_{pA} measured at 1 m distance from fan axis.
The values given are applicable only under the specified measuring conditions and may differ depending on the installation conditions.
In the event of deviation from the standard configuration, the parameters must be checked after installation!
For detailed information see
http://www.ebmpapst.com/general conditions

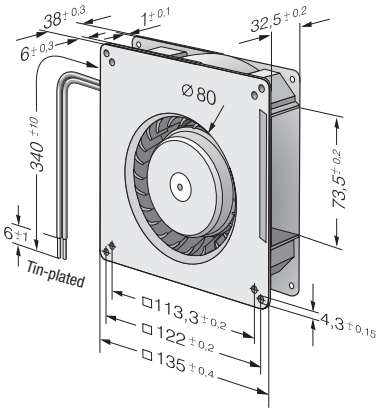

Max. 137 m³/h

DC centrifugal fans

□ 180 x 40 mm

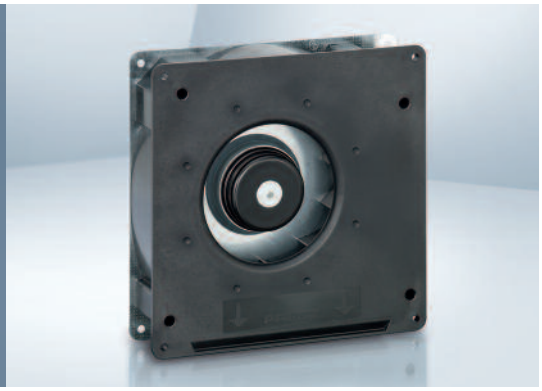

- **Material:** Scroll housing: GRP[1)]
  Impeller: GRP[1)]
  Base plate: Sheet steel
- **Direction of air flow:** Axial: Intake,
  Centrifugal: Exhaust
- **Connection:** Via single wires AWG 22, TR 64
  48 V model: Flat plug
  6.3 x 0.8 mm for ground conductor
- **Highlights:** Backward-curved impeller
- **Weight:** 730 g

1) Fiberglass-reinforced plastic

- **Possible special versions:**
  (See chapter DC fans - specials)
  - Speed signal
  - Go / NoGo alarm
  - Alarm with speed limit
  - External temperature sensor
  - Internal temperature sensor
  - PWM control input
  - Analog control input
  - Moisture protection
  - Salt spray protection
  - Degree of protection: IP 54 / IP 68

Series RG 125 N **Nominal data**	Air flow	Air flow	**Nominal voltage**	Voltage range	Sound power level	Sintec sleeve bearings Ball bearings	Power consumption	Nominal speed	Temperature range	Service life L_{10} (40 °C) ebm-papst standard Service life L_{10} (T_{max}) ebm-papst standard	Life expectancy L_{10IPC} (40 °C) see page 17	Curve
Type	**m³/h**	**cfm**	**VDC**	**VDC**	**Bel(A)**	**□/■**	**Watts**	**rpm⁻¹**	**°C**	**Hours**	**Hours**	
RG 125-19/12 NM	60.0	35.3	**12**	7...15	4.8	■	2.0	1 750	-30...+75	70 000 / 30 000	117 500	①
RG 125-19/12 N	87.5	51.5	**12**	7...15	5.8	■	5.2	2 550	-30...+75	62 500 / 27 500	105 000	②
RG 125-19/14 NM	60.0	35.3	**24**	12...28	4.8	■	2.0	1 750	-30...+75	70 000 / 30 000	117 500	①
RG 125-19/14 N	87.5	51.5	**24**	12...28	5.8	■	4.9	2 550	-30...+75	62 500 / 27 500	105 000	②
RG 125-19/18 N	87.5	51.5	**48**	36...56	5.8	■	4.8	2 550	-30...+75	62 500 / 27 500	105 000	②
RG 125-19/18 NH	137	80.6	**48**	36...56	7.0	■	19.0	4 000	-20...+70	55 000 / 27 500	92 500	③

Subject to change

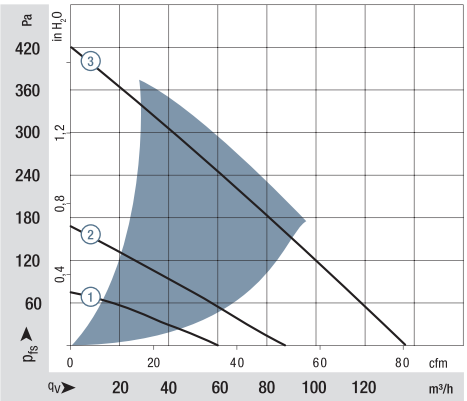

Air performance measured according to: ISO 5801.
Installation category A, without contact protection.
Noise: Total sound power level L_{WA} ISO 103002 measured on a hemisphere with a radius of 2 m.
Sound pressure level L_{pA} measured at 1 m distance from fan axis.
The values given are applicable only under the specified measuring conditions and may differ depending on the installation conditions.
In the event of deviation from the standard configuration, the parameters must be checked after installation!
For detailed information see http://www.ebmpapst.com/general conditions

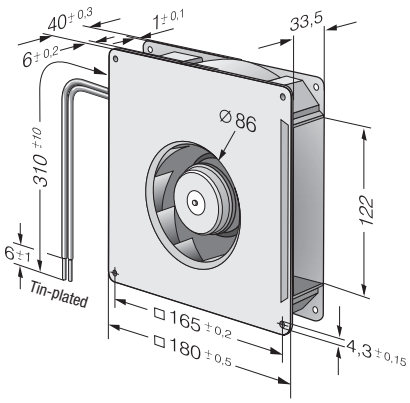

ebmpapst

Max. 118 m³/h

DC centrifugal fans

□ 180 x 40 mm

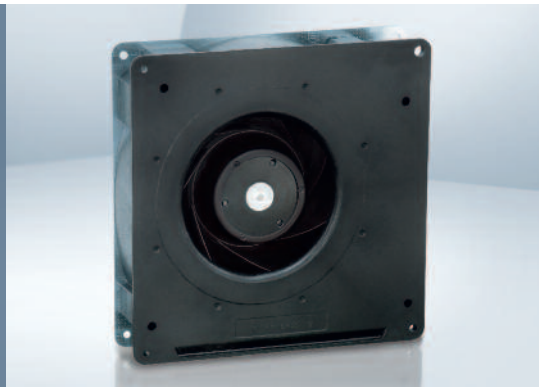

- **Material:** Scroll housing: GRP[1)]
  Impeller: GRP[1)]
  Base plate: Sheet steel
- **Direction of air flow:** Axial: Intake,
  Centrifugal: Exhaust
- **Connection:** via single wires AWG 22, TR 64
- **Highlights:** Backward-curved impeller
  3-phase fan drive with special commutation electronics for extremely low-noise operation
- **Weight:** 750 g

1) Fiberglass-reinforced plastic

- **Possible special versions:**
  (See chapter DC fans - specials)
  - Speed signal
  - Go / No-go alarm
  - Alarm with speed limit
  - External temperature sensor
  - PWM control input
  - Analog control input
  - Multi-option control input
  - Moisture protection
  - Salt spray protection
  - Degree of protection: IP 54

Series RG 140 NTD

Nominal data

	Type	Air flow m³/h	Air flow cfm	Nominal voltage VDC	Voltage range VDC	Sound power level Bel(A)	Sintec sleeve bearings □ / Ball bearings ■	Power consumption Watts	Nominal speed rpm⁻¹	Temperature range °C	Service life L_{10} (40 °C) ebm-papst standard Hours	Service life L_{10} (T_{max}) ebm-papst standard Hours	Life expectancy L_{10IPC} (40 °C) see page 17 Hours	Curve
NEW	RG 140-22/14 N/2 TDPU	118	69.4	**24**	20.4...27.6	6.0	■	9.3	2 500	-20...+70	62 500 / 32 500		105 000	①

Subject to change

Higher performance levels on request.

		n rpm⁻¹	P_{ed} W	Lw_A dB(A)
①	❶	2504	9	61
①	❷	2504	9	61
①	❸	2504	9	62
①	❹	2504	9	64

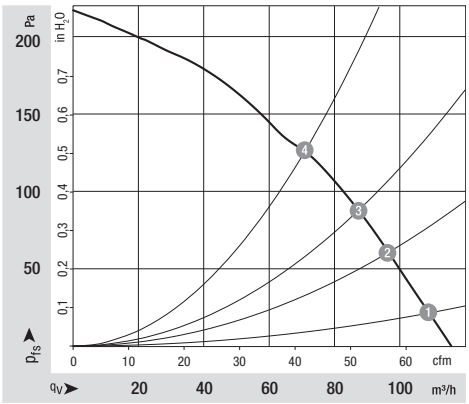

Air performance measured according to: ISO 5801.
Installation category A, without contact protection.
Noise: Total sound power level L_WA ISO 103002 measured on a hemisphere with a radius of 2 m.
Sound pressure level L_pA measured at 1 m distance from fan axis.
The values given are applicable only under the specified measuring conditions and may differ depending on the installation conditions.
In the event of deviation from the standard configuration, the parameters must be checked after installation!
For detailed information see http://www.ebmpapst.com/general conditions

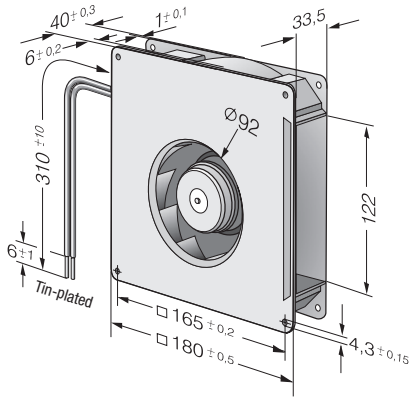

Max. 209 m³/h

DC centrifugal fans

☐ 220 x 56 mm

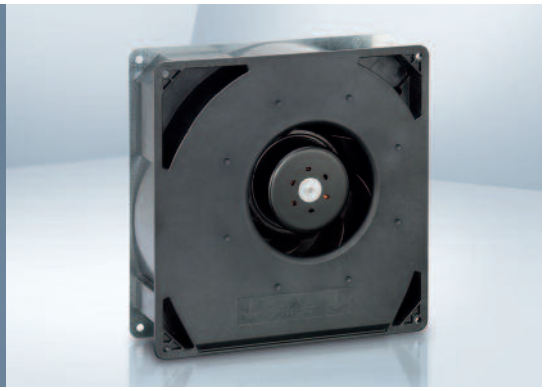

- **Material:** Scroll housing: GRP[1)]
  Impeller: GRP[1)]
  Base plate: Sheet steel
- **Direction of air flow:** Axial: Intake,
  Centrifugal: Exhaust
- **Connection:** Via single wires AWG 22, TR 64
  48 V model: Flat plug
  6.3 x 0.8 mm for ground conductor
- **Highlights:** Backward-curved impeller
- **Weight:** 1.4 kg

- **Possible special versions:**
  (See chapter DC fans - specials)
  - Speed signal
  - Go / NoGo alarm
  - Alarm with speed limit
  - External temperature sensor
  - Internal temperature sensor
  - PWM control input
  - Analog control input
  - Moisture protection
  - Salt spray protection
  - Degree of protection: IP 54

1) Fiberglass-reinforced plastic

Series RG 160 N **Nominal data**	Air flow	Air flow	**Nominal voltage**	Voltage range	Sound power level	Sintec sleeve bearings Ball bearings	Power consumption	Nominal speed	Temperature range	Service life L_{10} (40 °C) ebm-papst standard Service life L_{10} (T_{max}) ebm-papst standard	Life expectancy L_{10IPC} (40 °C) see page 17	Curve
Type	**m³/h**	**cfm**	**VDC**	**VDC**	**Bel(A)**	☐/■	**Watts**	**rpm⁻¹**	**°C**	**Hours**	**Hours**	
RG 160-28/12 NM	139	81	**12**	7...14	5.6	■	7.5	1 900	-20...+70	80 000 / 40 000	135 000	①
RG 160-28/12 N	209	123	**12**	7.5...14	6.6	■	21.0	2 850	-20...+70	70 000 / 35 000	117 500	②
RG 160-28/14 NM	139	81	**24**	12...28	5.6	■	7.0	1 900	-20...+70	80 000 / 40 000	135 000	①
RG 160-28/14 N	209	123	**24**	12...28	6.6	■	20.0	2 850	-20...+70	70 000 / 35 000	117 500	②
RG 160-28/18 N	209	123	**48**	28...60	6.6	■	20.0	2 850	-20...+70	70 000 / 35 000	117 500	②

Subject to change

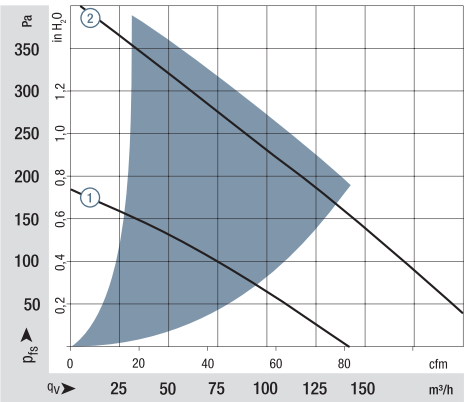

Air performance measured according to: ISO 5801.
Installation category A, without contact protection.
Noise: Total sound power level L_{WA} ISO 103002 measured on a hemisphere with a radius of 2 m.
Sound pressure level L_{pA} measured at 1 m distance from fan axis.
The values given are applicable only under the specified measuring conditions and may differ depending on the installation conditions.
In the event of deviation from the standard configuration, the parameters must be checked after installation!
For detailed information see http://www.ebmpapst.com/general conditions

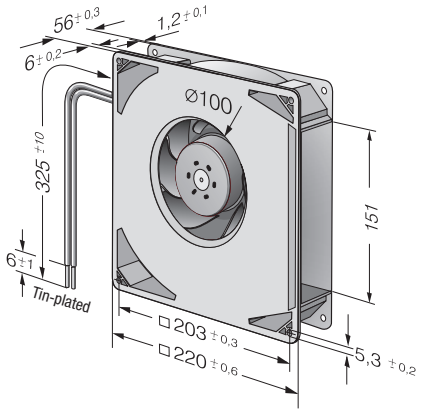

ebmpapst

Max. **444** m³/h

DC centrifugal fans

☐ 220 x 56 mm

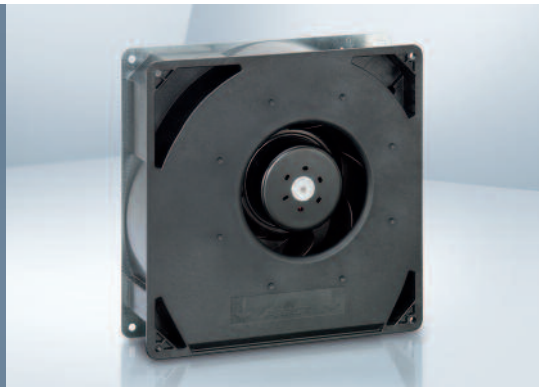

- **Material:** Scroll housing: GRP[1)]
  Impeller: GRP[1)]
  Base plate: Sheet steel
- **Direction of air flow:** Axial: Intake,
  Centrifugal: Exhaust
- **Connection:** Via single wires AWG 22, TR 64
  48 V model: Flat plug
  6.3 x 0.8 mm for ground conductor
- **Highlights:** Smoothly operating 3-phase fan drive
  Backward-curved impeller
- **Weight:** 1.4 kg

1) Fiberglass-reinforced plastic

- **Possible special versions:**
  (See chapter DC fans - specials)
  - Speed signal
  - Go / NoGo alarm
  - Alarm with speed limit
  - External temperature sensor
  - Internal temperature sensor
  - PWM control input
  - Analog control input
  - Humidity protection
  - Degree of protection: IP 54

Series RG 160 NTD **Nominal data**		Air flow	Air flow	**Nominal voltage**	Voltage range	Sound power level	Sintec sleeve bearings Ball bearings	Power consumption	Nominal speed	Temperature range	Service life L_{10} (40 °C) ebm-papst standard Service life L_{10} (T_{max}) ebm-papst standard	Life expectancy L_{10IPC} (40 °C) see page 17	Curve
	Type	**m³/h**	**cfm**	**VDC**	**VDC**	**Bel(A)**	☐/■	**Watts**	**rpm⁻¹**	**°C**	**Hours**	**Hours**	
Min.	RG 160-28/14 NTD...	59	34.7	**24**	16...28	—		2.0	800	-20...+60	55 000 / 35 000	92 500	①
Max.		308	181			7.5	■	64	4 200				②
	RG 160-28/14 NTD	308	181	**24**	16...28	7.5	■	64	4 200	-20...+60	55 000 / 35 000	92 500	②
	RG 160-28/14 NTDH	370	218	**24**	16...28	7.8	■	101	5 000	-20...+60	50 000 / 32 500	85 000	③
Min.	RG 160-28/18 NTD...	59	34.7	**48**	38...57	—		2.0	800	-20...+70	55 000 / 27 500	92 500	①
Max.		308	181			7.5	■	59	4 200				②
	RG 160-28/18 N/2 TDHHP*	444	261	**48**	36...60	8.5	■	159	6 000	-20...+65	40 000 / 22 500	67 500	④

Subject to change

Models RG 160-28/14 NTD... and RG 160-28/18 NTD... are available in customer-specific, custom-developed variants only.
The figures indicated are technically feasible benchmark values.
The fans can be specially adapted to your application with signal outputs and control inputs.
*The specific service life is valid when an external capacitor is wired between the positive and negative wires.
Please note the wiring suggestion.

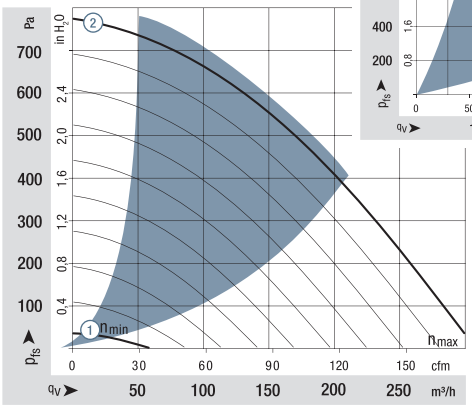

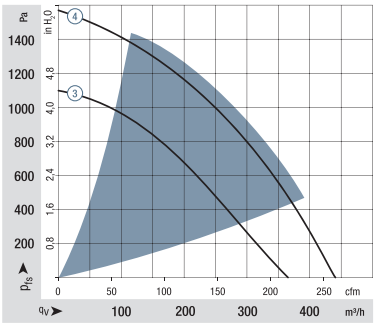

Air performance measured according to: ISO 5801.
Installation category A, without contact protection.
Noise: Total sound power level L_{WA} ISO 103002 measured on a hemisphere with a radius of 2 m.
Sound pressure level L_{pA} measured at 1 m distance from fan axis.
The values given are applicable only under the specified measuring conditions and may differ depending on the installation conditions.
In the event of deviation from the standard configuration, the parameters must be checked after installation!
For detailed information see
http://www.ebmpapst.com/general conditions

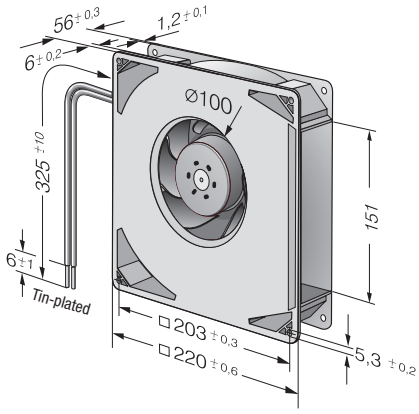

Max. 930 m³/h

S-Force

DC centrifugal fans

□ 226 x 85 mm

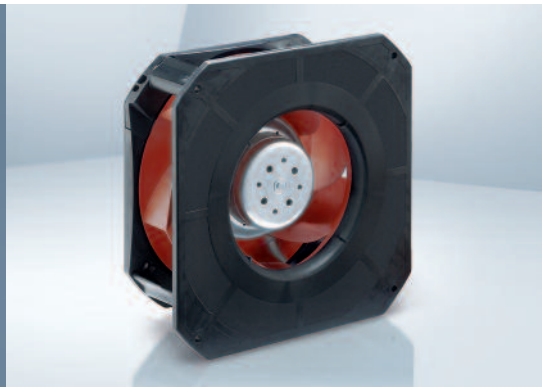

- **Material:** Scroll housing: GRP[1)] Impeller: GRP[1)]
- **Direction of air flow:** Axial: Intake, Centrifugal: Exhaust
- **Direction of rotation:** Clockwise, looking towards rotor
- **Connection:** via single wires AWG 18, 20 or AWG 22, TR 64. Speed signal and control input AWG 22
- **Highlights:** Highly efficient and smoothly operating 3-phase fan drive Backward-curved RadiCal impeller
- **Weight:** 1210 g

1) Fiberglass-reinforced plastic

- **Possible special versions:** (See chapter DC fans - specials)
  - Speed signal
  - Go / NoGo alarm
  - Alarm with speed limit
  - External temperature sensor
  - Internal temperature sensor
  - PWM control input
  - Analog control input
  - Multi-option control input
  - Moisture protection
  - Salt spray protection
  - Degree of protection: IP 54

Series RG 190 TD

Nominal data / Type	Air flow m³/h	Air flow cfm	Nominal voltage VDC	Voltage range VDC	Sound power level Bel(A)	Sintec sleeve bearings □ / Ball bearings ■	Power consumption Watts	Nominal speed rpm⁻¹	Temperature range °C	Service life L_{10} (40 °C) ebm-papst standard Hours	Service life L_{10} (T_{max}) ebm-papst standard Hours	Life expectancy L_{10IPC} (40 °C) see page 17 Hours	Curve
RG 190-39/14/2 TDMLO	630	371	**24**	16...30	7.6	■	54	3 000	-20...+60	55 000 / 35 000		92 500	①
RG 190-39/14/2 TDMO	820	482	**24**	16...36	7.9	■	113	3 900	-20...+65	52 500 / 30 000		87 500	②
RG 190-39/18/2 TDMLO*	630	371	**48**	36...57	7.6	■	52	3 000	-20...+65	55 000 / 30 000		92 500	①
RG 190-39/18/2 TDMO	820	482	**48**	36...72	7.9	■	113	3 900	-20...+65	52 500 / 30 000		87 500	②
RG 190-39/18/2 TDO	930	547	**48**	36...72	8.3	■	140	4 400	-20...+65	40 000 / 22 500		67 500	③

Subject to change

* On request

Speed control range from 800 rpm⁻¹ at 7% PWM up to nominal speed at > 90% PWM. Standstill at 0% PWM, Standstill if control cable is interrupted.

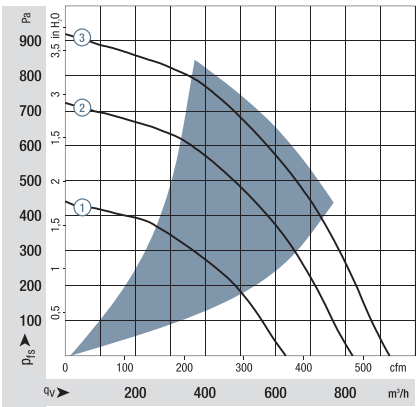

Air performance measured according to: ISO 5801.
Installation category A, without contact protection.
Noise: Total sound power level L_WA ISO 103002 measured on a hemisphere with a radius of 2 m.
Sound pressure level L_pA measured at 1 m distance from fan axis.
The values given are applicable only under the specified measuring conditions and may differ depending on the installation conditions.
In the event of deviation from the standard configuration, the parameters must be checked after installation!
For detailed information see http://www.ebmpapst.com/general conditions

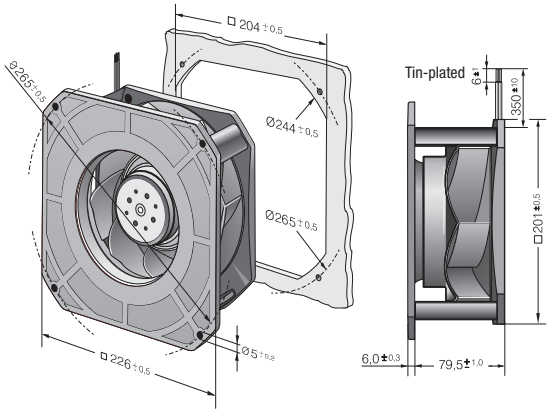

Max. 1100 m³/h

S-Force

DC centrifugal fans – RadiCal

□ 270 x 99 mm

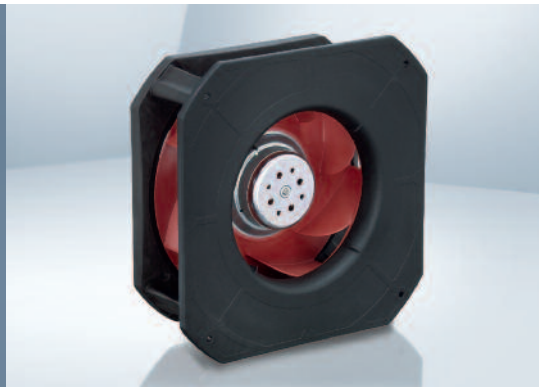

- **Material:** Scroll housing: GRP[1)] Impeller: GRP[1)]
- **Direction of air flow:** Axial: Intake, Centrifugal: Exhaust
- **Direction of rotation:** Clockwise, looking towards rotor
- **Connection:** via single wires AWG 18, 20 or AWG 22, TR 64. Speed signal and control input AWG 22
- **Highlights:** Highly efficient and smoothly operating 3-phase fan drive Backward-curved impeller
- **Weight:** 1560 g

1) Fiberglass-reinforced plastic

- **Possible special versions:** (See chapter DC fans - specials)
  - Speed signal
  - Go / NoGo alarm
  - Alarm with speed limit
  - External temperature sensor
  - Internal temperature sensor
  - PWM control input
  - Analog control input
  - Humidity protection
  - Salt spray protection
  - Degree of protection:IP 54

Series RG 220 TD

Nominal data	Air flow	Air flow	Nominal voltage	Voltage range	Sound power level	Sintec sleeve bearings / Ball bearings	Power consumption	Nominal speed	Temperature range	Service life L_{10} (40 °C) ebm-papst standard / Service life L_{10} (T_{max}) ebm-papst standard	Life expectancy L_{10IPC} (40 °C) see page 17	Curve
Type	**m³/h**	**cfm**	**VDC**	**VDC**	**Bel(A)**	**□/■**	**Watts**	**rpm⁻¹**	**°C**	**Hours**	**Hours**	
RG 220-43/14/2 TDM0	1100	647	**24**	16...36	7.5	■	101	3 000	-20...+55	55 000 / 40 000	92 500	①
RG 220-43/18/2 TDM0*	1100	647	**48**	36...72	7.5	■	101	3 000	-20...+55	55 000 / 40 000	92 500	①

Subject to change

* On request

Speed control range from 800 rpm⁻¹ at 7% PWM up to nominal speed at > 90% PWM.
Standstill at 0% PWM, Standstill if control cable is interrupted.
Further types available on request.

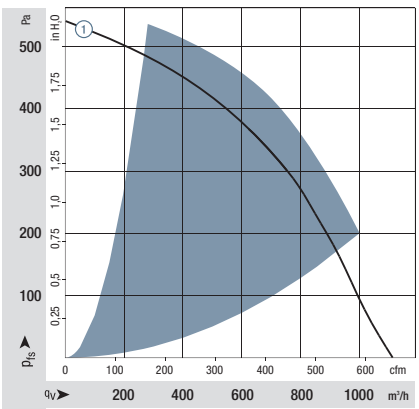

Air performance measured according to: ISO 5801.
Installation category A, without contact protection.
Noise: Total sound power level L_WA ISO 103002 measured on a hemisphere with a radius of 2 m.
Sound pressure level L_pA measured at 1 m distance from fan axis.
The values given are applicable only under the specified measuring conditions and may differ depending on the installation conditions.
In the event of deviation from the standard configuration, the parameters must be checked after installation!
For detailed information see http://www.ebmpapst.com/general conditions

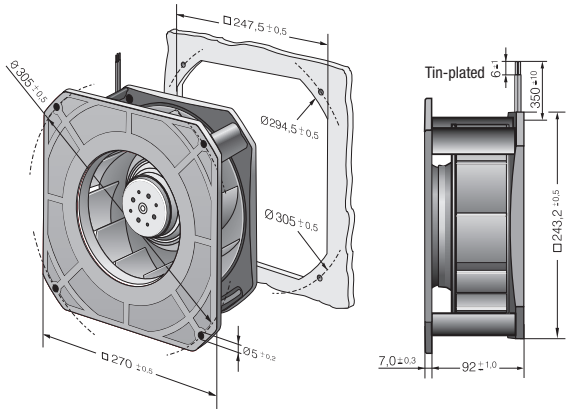

Max. 1450 m³/h

S-Force

DC centrifugal fans – RadiCal

□ 270 x 119 mm

- **Material:** Scroll housing: GRP[1)] Impeller: GRP[1)]
- **Direction of air flow:** Axial: Intake, Centrifugal: Exhaust
- **Direction of rotation:** Clockwise, looking towards rotor
- **Connection:** via single wires AWG 18, 20 or AWG 22, TR 64. Speed signal and control input AWG 22
- **Highlights:** Highly efficient and smoothly operating 3-phase fan drive Backward-curved RadiCal impeller
- **Weight:** 1750 g

1) Fiberglass-reinforced plastic

- **Possible special versions:** (See chapter DC fans - specials)
  - Speed signal
  - Go / NoGo alarm
  - Alarm with speed limit
  - External temperature sensor
  - Internal temperature sensor
  - PWM control input
  - Analog control input
  - Humidity protection
  - Salt spray protection
  - Degree of protection: IP 54

Series RG 225 TD

Nominal data	Air flow	Air flow	Nominal voltage	Voltage range	Sound power level	Sintec sleeve bearings / Ball bearings	Power consumption	Nominal speed	Temperature range	Service life L_{10} (40 °C) ebm-papst standard / Service life L_{10} (T_{max}) ebm-papst standard	Life expectancy L_{10IPC} (40 °C) see page 17	Curve
Type	**m³/h**	**cfm**	**VDC**	**VDC**	**Bel(A)**	□/■	**Watts**	**rpm⁻¹**	**°C**	**Hours**	**Hours**	
RG 225-55/14/2 TDMLO	1090	641	**24**	16...36	7.4	■	80	2 500	-20...+65	52 500 / 30 000	87 500	①
RG 225-55/18/2 TDMLO*	1090	641	**48**	36...72	7.4	■	80	2 500	-20...+65	52 500 / 30 000	87 500	①
RG 225-55/18/2 TDMO	1210	712	**48**	36...72	7.9	■	116	2 800	-20...+55	55 000 / 40 000	92 500	②
RG 225-55/18/2 TDO	1450	853	**48**	36...60	8.1	■	192	3 300	-20...+40	30 000 / 30 000	50 000	③

Subject to change

* On request

Speed control range from 800 rpm⁻¹ at 7% PWM up to nominal speed at > 90% PWM. Standstill at 0% PWM, Standstill if control cable is interrupted.
The specific service life is valid when an external capacitor is wired between the positive and negative wires.
Please note the wiring suggestion.

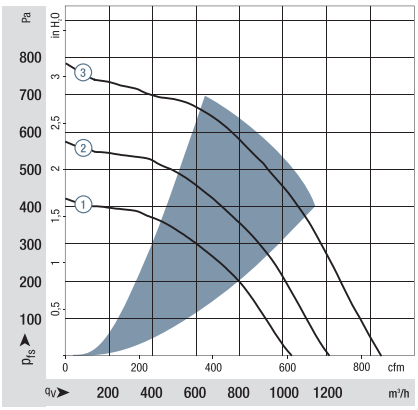

Air performance measured according to: ISO 5801.
Installation category A, without contact protection.
Noise: Total sound power level L_WA ISO 103002 measured on a hemisphere with a radius of 2 m.
Sound pressure level L_pA measured at 1 m distance from fan axis.
The values given are applicable only under the specified measuring conditions and may differ depending on the installation conditions.
In the event of deviation from the standard configuration, the parameters must be checked after installation!
For detailed information see http://www.ebmpapst.com/general conditions

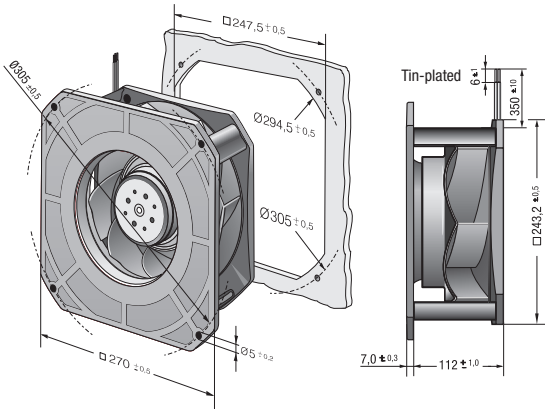

Max. 220 m³/h

S-Force

DC centrifugal fans

Ø 97 x 41 mm

- **Material:** Impeller: Galvanized sheet steel
- **Direction of air flow:** Axial: Intake, Centrifugal: Exhaust
- **Direction of rotation:** Clockwise, looking towards rotor
- **Connection:** via single wires AWG 18, 20 or AWG 22, TR 64. Speed signal and control input AWG 22
- **Highlights:** Highly efficient and smoothly operating 3-phase fan drive, Forward-curved impeller, Fan requires a scroll housing
- **Weight:** 430 g
- **Possible special versions:** (See chapter DC fans - specials)
  - Speed signal
  - Go / NoGo alarm
  - Alarm with speed limit
  - External temperature sensor
  - Internal temperature sensor
  - PWM control input
  - Analog control input
  - Moisture protection

Series RET 97 TD

Nominal data

Type	Air flow m³/h	Air flow cfm	Nominal voltage VDC	Voltage range VDC	Sound power level Bel(A)	Sintec sleeve bearings □ / Ball bearings ■	Power consumption Watts	Nominal speed rpm⁻¹	Temperature range °C	Service life L_{10} (40 °C) ebm-papst standard Hours	Service life L_{10} (T_{max}) ebm-papst standard Hours	Life expectancy L_{10IPC} (40 °C) see page 17 Hours	Curve
RET 97-25/14/2 TDP	220	129	**24**	16...32	8.1	■	77	6 000	-20...+60	80 000 / 50 000		135 000	①
RET 97-25/18/2 TDP	220	129	**48**	36...60	8.1	■	76	6 000	-20...+60	80 000 / 50 000		135 000	①

Subject to change

Speed control range from 800 rpm⁻¹ at 7% PWM up to nominal speed at > 90% PWM.
Standstill at 0% PWM, maximum speed if control cable is interrupted.
To attain the specified service life, an external capacitor must be wired between the positive and negative wires. Please note the wiring suggestion.

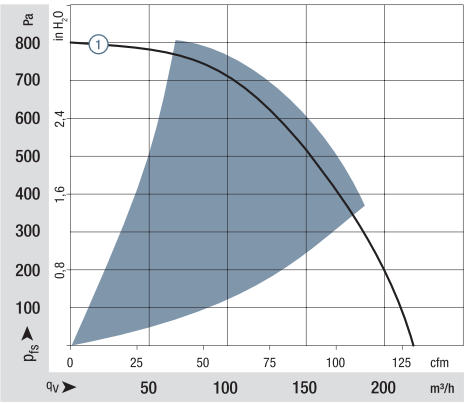

Air performance measured according to: ISO 5801.
Installation category A, with ebm-papst scroll housing without contact protection.
Noise: Total sound power level L_{WA} ISO 103002 measured on a hemisphere with a radius of 2 m.
Sound pressure level L_{pA} measured at 1 m distance from fan axis.
The values given are applicable only under the specified measuring conditions and may differ depending on the installation conditions.
In the event of deviation from the standard configuration, the parametersmust be checked after installation!
For detailed information see http://www.ebmpapst.com/general conditions

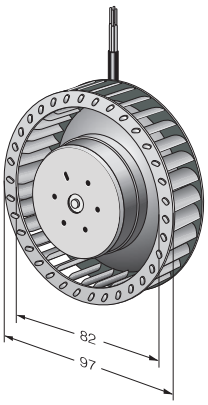

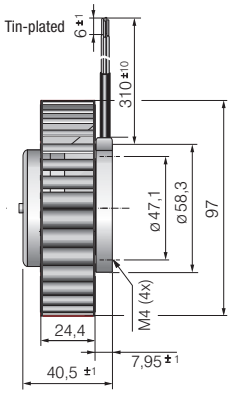

Max. 104 m³/h

DC centrifugal fans

Ø 104 x 25 mm

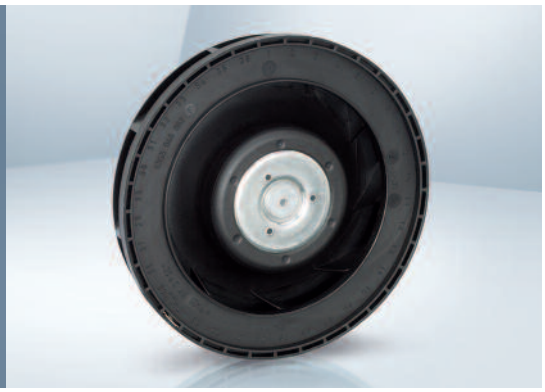

- **Material:** Impeller: GRP[1)]
- **Direction of air flow:** Axial: Intake, Centrifugal: Exhaust
- **Direction of rotation:** Clockwise, looking towards rotor
- **Connection:** via single wires AWG 22, TR 64
- **Highlights:** Backward-curved impeller
- **Weight:** 160 g

- **Possible special versions:**
  (See chapter DC fans - specials)
  - Speed signal
  - Go / NoGo alarm
  - Alarm with speed limit
  - External temperature sensor
  - Internal temperature sensor
  - PWM control input
  - Analog control input
  - Moisture protection
  - Degree of protection: IP 54

1) Fiberglass-reinforced plastic

Series REF 100 **Nominal data**	Air flow	Air flow	**Nominal voltage**	Voltage range	Sound power level	Sintec sleeve bearings / Ball bearings	Power consumption	Nominal speed	Temperature range	Service life L_{10} (40 °C) ebm-papst standard / Service life L_{10} (T_{max}) ebm-papst standard	Life expectancy L_{10IPC} (40 °C) see page 17	Curve
Type	**m³/h**	**cfm**	**VDC**	**VDC**	**Bel(A)**	□/■	**Watts**	**rpm⁻¹**	**°C**	**Hours**	**Hours**	
REF 100-11/12	86	50.6	**12**	8...15	6.3	■	7.5	5 400	-20...+75	80 000 / 30 000	135 000	①
REF 100-11/14	86	50.6	**24**	16...30	6.3	■	7.5	5 400	-20...+75	80 000 / 30 000	135 000	①
REF 100-11/18	86	50.6	**48**	36...60	6.3	■	8.2	5 400	-20...+75	80 000 / 30 000	135 000	①
REF 100-11/18 H	104	61.2	**48**	36...56	6.9	■	14.8	6 700	-20...+70	67 500 / 32 500	115 000	②

Subject to change

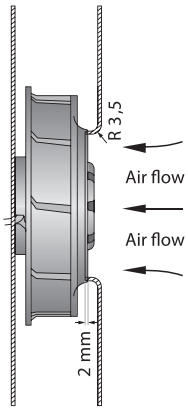

The air flow and sound level of the centrifugal fans without external housing depend on their individual installation conditions.
The stated air flow and sound level were recorded under the following measurement parameters:
Centrifugal fan mounted on a foundation plate 127 x 127 mm.
Cover plate 127 x 127 mm, with an air inlet opening Ø 70 mm, arranged concentrically to the impeller.

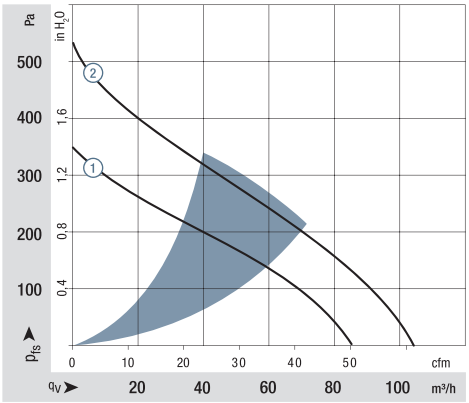

Air performance measured according to: ISO 5801.
Installation category A, with ebm-papst inlet ring without contact protection.
Noise: Total sound power level L_WA ISO 103002 measured on a hemisphere with a distance of 2 m;
Sound pressure level L_pA measured at 1 m distance from fan axis.
The values given are applicable only under the specified measuring conditions and may differ depending on the installation conditions.
In the event of deviation from the standard configuration, the parameters must be checked after installation!
For detailed information see http://www.ebmpapst.com/general conditions

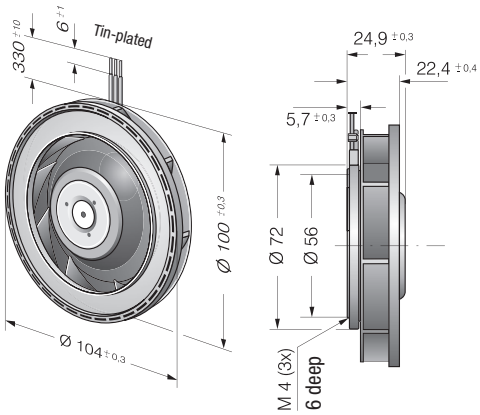

ebmpapst

Max. 190 m³/h

DC centrifugal fans

Ø 101 x 52 mm

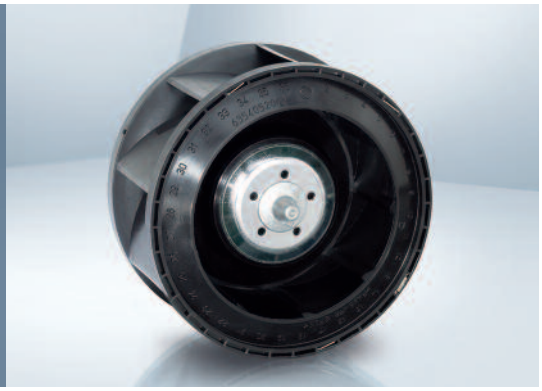

- **Material:** Impeller: GRP[1)]
- **Direction of air flow:** Axial: Intake, Centrifugal: Exhaust
- **Direction of rotation:** Clockwise, looking towards rotor
- **Connection:** via single wires AWG 22, TR 64
- **Highlights:** Backward-curved impeller
- **Weight:** 305 g

- **Possible special versions:**
  (See chapter DC fans - specials)
  - Speed signal
  - Go / NoGo alarm
  - Alarm with speed limit
  - External temperature sensor
  - Internal temperature sensor
  - PWM control input
  - Analog control input
  - Moisture protection

1) Fiberglass-reinforced plastic

Series RER 101 N **Nominal data**	Air flow	Air flow	**Nominal voltage**	Voltage range	Sound power level	Sintec sleeve bearings Ball bearings	Power consumption	Nominal speed	Temperature range	Service life L_{10} (40 °C) ebm-papst standard Service life L_{10} (T_{max}) ebm-papst standard	Life expectancy L_{10IPC} (40 °C) see page 17	Curve
Type	**m³/h**	**cfm**	**VDC**	**VDC**	**Bel(A)**	□/■	**Watts**	**rpm⁻¹**	**°C**	**Hours**	**Hours**	
RER 101-36/12 NH	162	95	**12**	9...13.6	6.9	■	13.0	5 000	-20...+70	65 000 / 32 500	110 000	②
RER 101-36/12 NHH	190	112	**12**	9...13.6	7.2	■	20.5	6 000	-20...+70	60 000 / 30 000	102 500	①
RER 101-36/14 NHH	190	112	**24**	18...27.2	7.2	■	22.5	6 050	-20...+70	60 000 / 30 000	102 500	①
RER 101-36/18 NHH	190	112	**48**	36...60	7.2	■	19.4	5 850	-20...+70	60 000 / 30 000	102 500	①

Subject to change

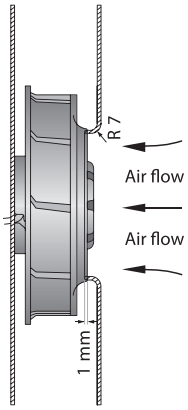

The air flow and sound level of the centrifugal fans without external housing depend on their individual installation conditions.
The stated air flow and sound level were recorded under the following measurement parameters:
Centrifugal fan mounted on a foundation plate 148 x 148 mm.
Cover plate 148 x 148 mm, with an air inlet opening Ø 66 mm, arranged concentrically to the impeller.

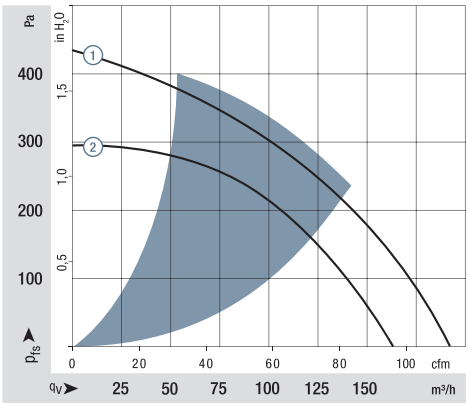

Air performance measured according to: ISO 5801.
Installation category A, with ebm-papst inlet ring without contact protection.
Noise: Total sound power level L_{WA} ISO 103002 measured on a hemisphere with a distance of 2 m;
Sound pressure level L_{pA} measured at 1 m distance from fan axis.
The values given are applicable only under the specified measuring conditions and may differ depending on the installation conditions.
In the event of deviation from the standard configuration, the parameters must be checked after installation!
For detailed information see http://www.ebmpapst.com/general conditions

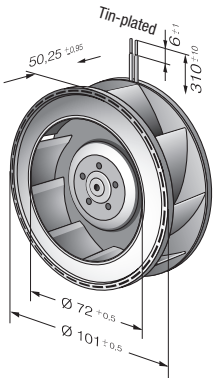

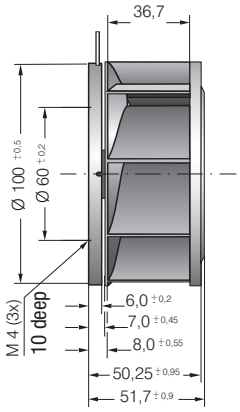

Max. 390 m³/h

S-Force

DC centrifugal fans

Ø 120 x 54 mm

- **Material:** Impeller: GRP[1)]
- **Direction of air flow:** Axial: Intake, Centrifugal: Exhaust
- **Direction of rotation:** Clockwise, looking towards rotor
- **Connection:** via single wires AWG 18, 20 or AWG 22, TR 64. Speed signal and control input AWG 22
- **Highlights:** Highly efficient and smoothly operating 3-phase fan drive Backward-curved impeller
- **Weight:** 430 g

1) Fiberglass-reinforced plastic

- **Possible special versions:**
  (See chapter DC fans - specials)
  - Speed signal
  - Go / NoGo alarm
  - Alarm with speed limit
  - External temperature sensor
  - Internal temperature sensor
  - PWM control input
  - Analog control input
  - Moisture protection

Series RER 120 TD

Nominal data

Type	Air flow m³/h	Air flow cfm	**Nominal voltage VDC**	Voltage range VDC	Sound power level Bel(A)	Sintec sleeve bearings □ / Ball bearings ■	Power consumption Watts	Nominal speed rpm⁻¹	Temperature range °C	Service life L_{10} (40 °C) ebm-papst standard Hours	Service life L_{10} (T_{max}) ebm-papst standard Hours	Life expectancy L_{10IPC} (40 °C) see page 17 Hours	Curve
RER 120-26/14/2 TDMP*	320	188	**24**	16...32	tbd	■	51	5 200	-20...+60	60 000 / 37 500		102 500	①
RER 120-26/14/2 TDP	377	222	**24**	16...32	8.2	■	78	6 100	-20...+60	55 000 / 35 000		92 500	②
RER 120-26/18/2 TDMP*	320	188	**48**	36...60	tbd	■	51	5 200	-20...+60	57 500 / 35 000		97 500	①
RER 120-26/18/2 TDP	390	230	**48**	36...60	8.3	■	92	6 300	-20...+60	50 000 / 30 000		85 000	③

Subject to change

* On request

Speed control range from 800 rpm⁻¹ at 7% PWM up to nominal speed at > 90% PWM. Standstill at 0% PWM, maximum speed if control cable is interrupted.
The specific service life is valid when an external capacitor is wired between the positive and negative wires.
Please note the wiring suggestion.

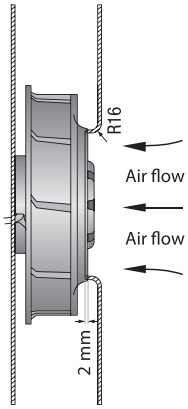

The air flow and sound level of the centrifugal fans without external housing depend on their individual installation conditions.
The stated air flow and sound level were recorded under the following measurement parameters:
Centrifugal fan mounted on a foundation plate 140 x 140 mm.
Cover plate 140 x 140 mm, with an air inlet opening Ø 94.4 mm, arranged concentrically to the impeller.

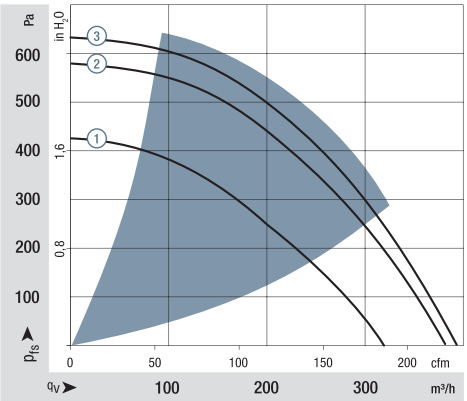

Air performance measured according to: ISO 5801.
Installation category A, with ebm-papst inlet ring without contact protection.
Noise: Total sound power level L_{WA} ISO 103002 measured on a hemisphere with a distance of 2 m;
Sound pressure level L_{pA} measured at 1 m distance from fan axis.
The values given are applicable only under the specified measuring conditions and may differ depending on the installation conditions.
In the event of deviation from the standard configuration, the parameters must be checked after installation!
For detailed information see http://www.ebmpapst.com/general conditions

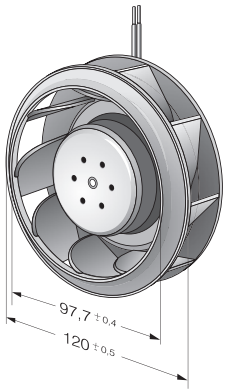

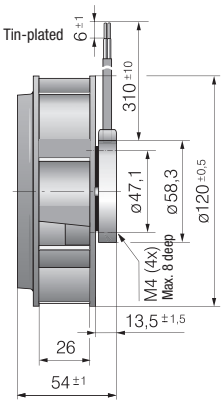

Inlet rings
from p. 252

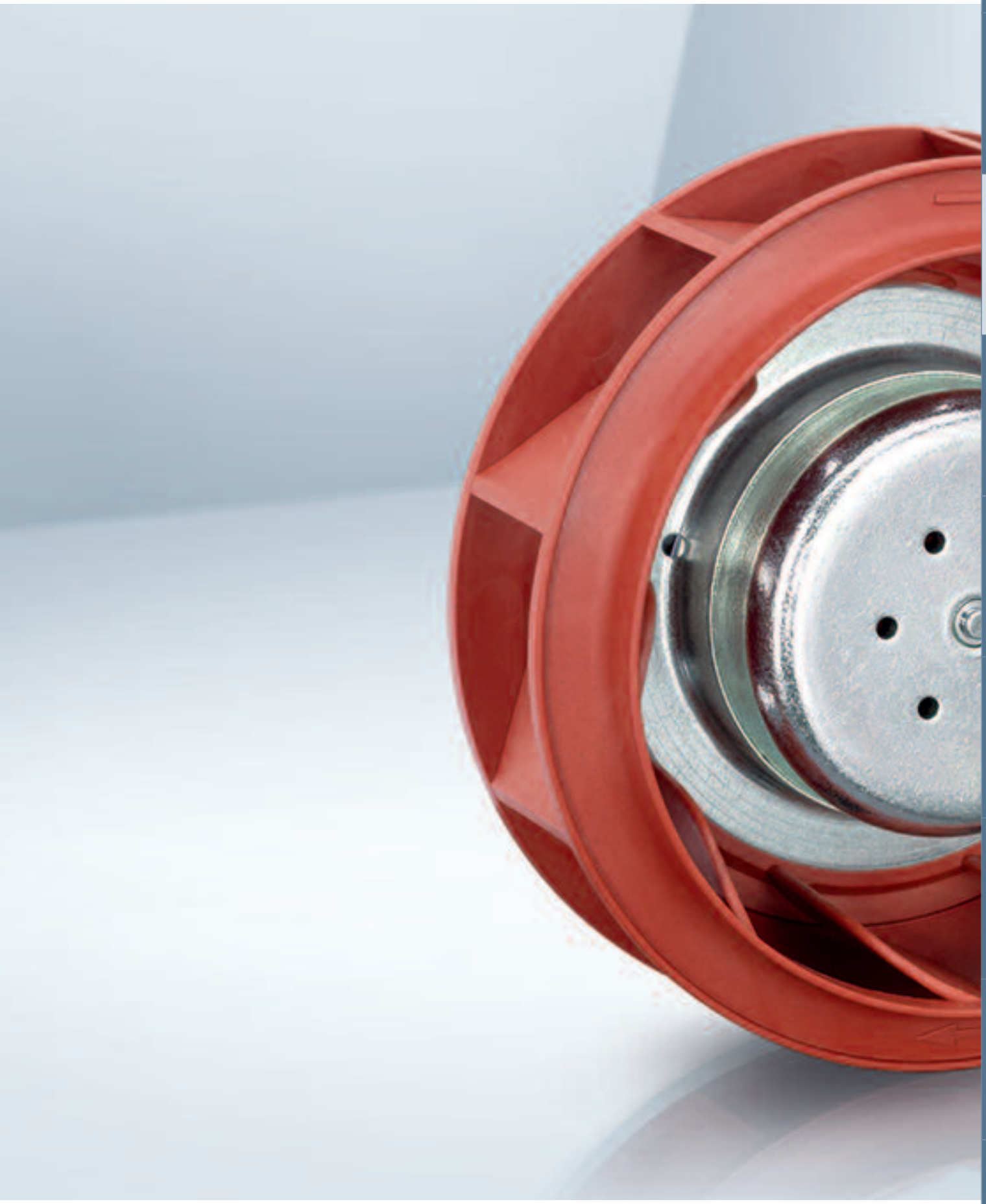

Max. 250 m³/h

DC centrifugal fans

Ø 120 mm

- **Material:** Impeller: PA 6.6 plastic, fiberglass-reinforced
  Rotor: Galvanized
- **Number of blades:** 9
- **Direction of rotation:** Clockwise, looking towards rotor
- **Degree of protection:** IP 20
- **Insulation class:** "B"
- **Installation position:** Any
- **Condensation drainage holes:** None
- **Mode of operation:** Continuous operation (S1)
- **Bearings:** Maintenance-free ball bearings

Nominal data		Curve	Nominal voltage	Nominal voltage range	Air flow	Nominal speed	Power consumption	Input current	Sound pressure level	Admissible amb. temp.	Technical features and connection diagram
Type	**Motor**		**VDC**	**VDC**	**m³/h**	**rpm⁻¹**	**W**	**A**	**dB(A)**	**°C**	
R1G 120	M1G 045-BE	Ⓐ	24	16-28	250	4060	26	1.20	62	-25..+50	p. 259 / G)
R1G 120	M1G 045-BE	Ⓐ	48	36-57	250	4060	26	0.60	62	-25..+50	p. 259 / G)

Subject to change

Curves:

U_N = nominal voltage (24 V /48 V)

U_R = over-voltage (28 V / 57 V)

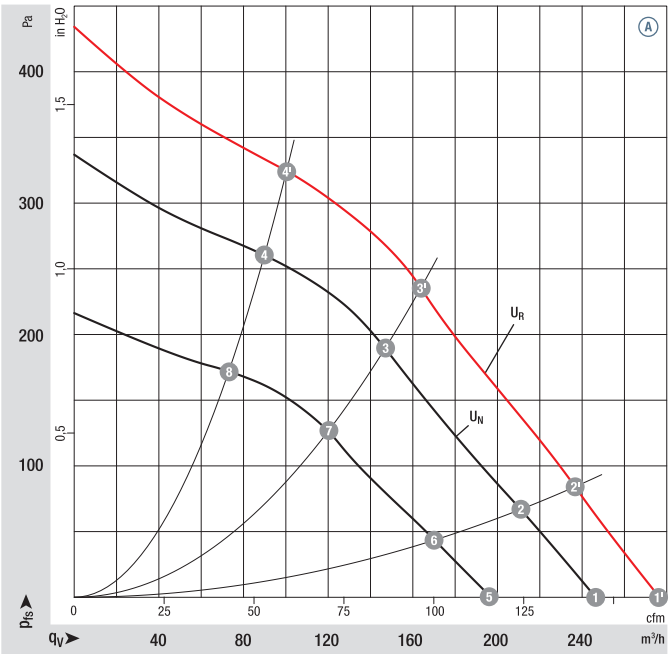

		n rpm⁻¹	P_{ed} W	Lp_A dB(A)	η_{tL} %
Ⓐ	1'	4520	36	65	—
Ⓐ	2'	4500	36	64	27
Ⓐ	3'	4540	36	61	45
Ⓐ	4'	4750	32	64	39
Ⓐ	1	4060	26	62	—
Ⓐ	2	4000	26	61	27
Ⓐ	3	4050	26	58	45
Ⓐ	4	4200	23	61	39
Ⓐ	5	3270	14	56	—
Ⓐ	6	3250	14	55	27
Ⓐ	7	3280	14	53	45
Ⓐ	8	3400	13	56	39

Air performance measured according to: ISO 5801, Installation category A, with ebm-papst inlet ring without contact protection. Suction-side noise levels: LWA according to ISO 13347, L_pA measured at 1 m distance from fan axis. The values given are applicable only under the specified measuring conditions and may differ depending on the installation conditions. In the event of deviation from the standard configuration, the parameters must be checked after installation! For detailed information see http://www.ebmpapst.com/general conditions

ebmpapst

- **Technical features:** See connection diagram p. 259
- **Cable exit:** Axial
- **Conformity with standard(s):** EN 60950-1
- **Approvals:** EAC

Weight centrifugal fans

Centrifugal fans	kg	Inlet ring (long)
R1G 120-AD13 -02	0.5	96120-2-4013
R1G 120-AD11 -02	0.5	96120-2-4013

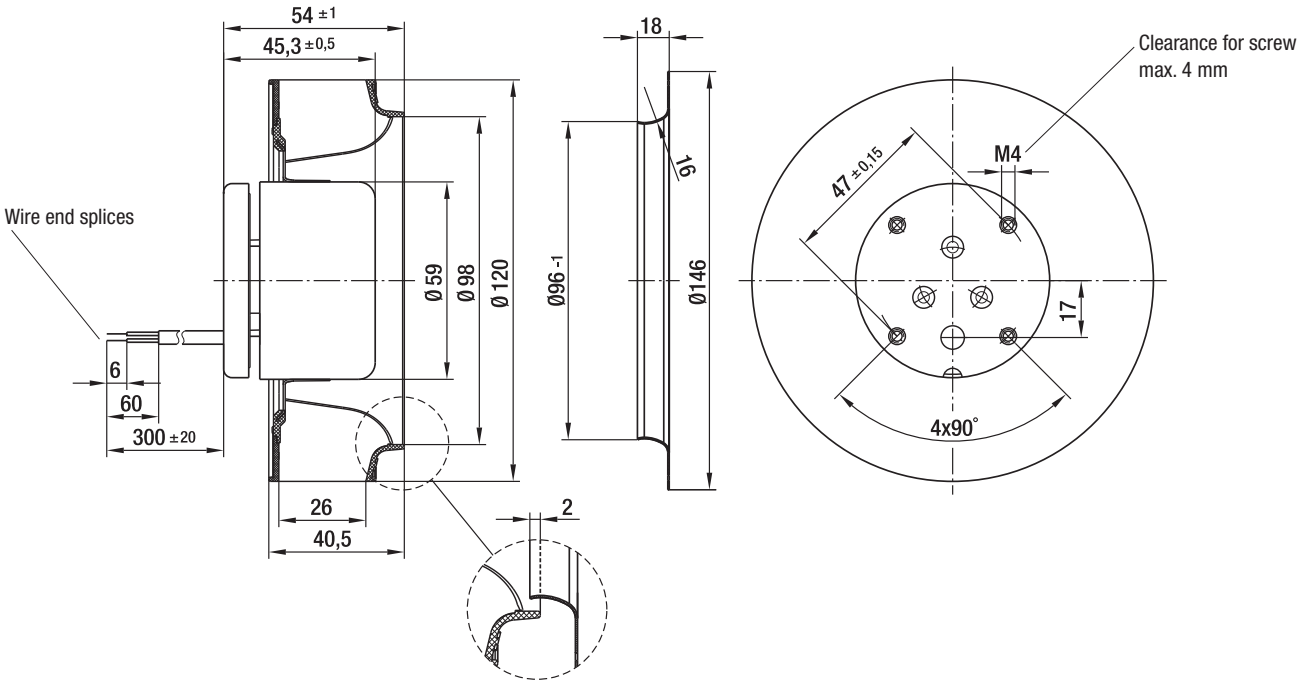

Max. 166 m³/h

DC centrifugal fans

Ø 138 x 35 mm

- **Material:** Impeller: GRP[1)]
- **Direction of air flow:** Axial: Intake, Centrifugal: Exhaust
- **Direction of rotation:** Clockwise, looking towards rotor
- **Connection:** via single wires AWG 22, TR 64
- **Highlights:** Backward-curved impeller
- **Weight:** 320 g

- **Possible special versions:**
  (See chapter DC fans - specials)
  - Speed signal
  - Go / NoGo alarm
  - Alarm with speed limit
  - External temperature sensor
  - Internal temperature sensor
  - PWM control input
  - Analog control input
  - Moisture protection
  - Salt spray protection
  - Degree of protection: IP 54 / IP 68

1) Fiberglass-reinforced plastic

Series RER 125 N **Nominal data**	Air flow	Air flow	**Nominal voltage**	Voltage range	Sound power level	Sintec sleeve bearings / Ball bearings	Power consumption	Nominal speed	Temperature range	Service life L_{10} (40 °C) ebm-papst standard / Service life L_{10} (T_{max}) ebm-papst standard	Life expectancy L_{10IPC} (40 °C) see page 17	Curve
Type	**m³/h**	**cfm**	**VDC**	**VDC**	**Bel(A)**	□/■	**Watts**	**rpm⁻¹**	**°C**	**Hours**	**Hours**	
RER 125-19/12 N	110	64.7	**12**	7...15	5.7	■	4.6	2 650	-30...+75	62 500 / 27 500	105 000	①
RER 125-19/14 N	110	64.7	**24**	12...28	5.7	■	4.3	2 650	-30...+75	62 500 / 27 500	105 000	①
RER 125-19/14 NH	166	97.7	**24**	12...28	7.0	■	13.0	4 000	-20...+70	55 000 / 27 500	92 500	②
RER 125-19/18 N	110	64.7	**48**	36...56	5.7	■	4.2	2 650	-30...+75	62 500 / 27 500	105 000	①

Subject to change

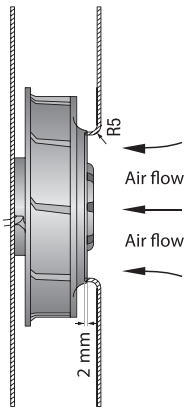

The air flow and sound level of the centrifugal fans without external housing depend on their individual installation conditions.
The stated air flow and sound level were recorded under the following measurement parameters:
Centrifugal fan mounted on a foundation plate 220 x 220 mm.
Cover plate 220 x 220 mm, with an air inlet opening Ø 86 mm, arranged concentrically to the impeller.

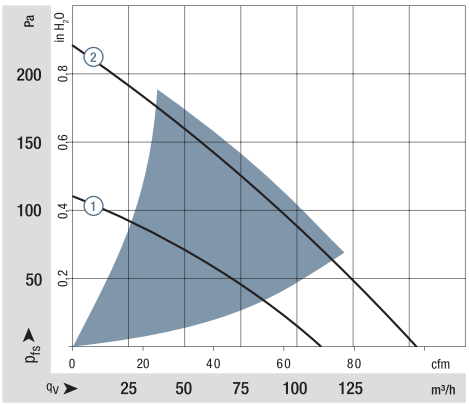

Air performance measured according to: ISO 5801.
Installation category A, with ebm-papst inlet ring without contact protection.
Noise: Total sound power level L_WA ISO 103002 measured on a hemisphere with a distance of 2 m;
Sound pressure level L_pA measured at 1 m distance from fan axis.
The values given are applicable only under the specified measuring conditions and may differ depending on the installation conditions.
In the event of deviation from the standard configuration, the parameters must be checked after installation!
For detailed information see http://www.ebmpapst.com/general conditions

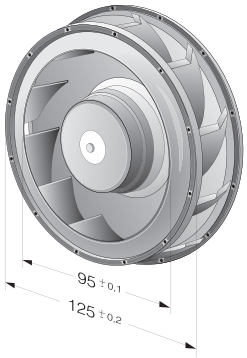

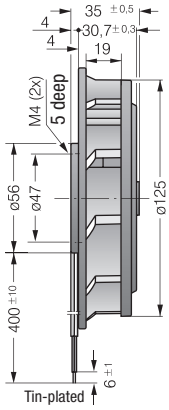

ebmpapst

Max. 565 m³/h

S-Force

DC centrifugal fans

Ø 133 x 91 mm

- **Material:** Impeller: GRP[1)]
- **Direction of air flow:** Axial: Intake, Centrifugal: Exhaust
- **Direction of rotation:** Clockwise, looking towards rotor
- **Connection:** via single wires AWG 18, 20 or AWG 22, TR 64. Speed signal and control input AWG 22
- **Highlights:** Highly efficient and smoothly operating 3-phase fan drive Backward-curved impeller
- **Weight:** 890 g

1) Fiberglass-reinforced plastic

- **Possible special versions:**
  (See chapter DC fans - specials)
  - Speed signal
  - Go / NoGo alarm
  - Alarm with speed limit
  - External temperature sensor
  - Internal temperature sensor
  - PWM control input
  - Analog control input
  - Multi-option control input
  - Moisture protection
  - Salt spray protection
  - Degree of protection: IP 54

Series RER 133 TD

Nominal data

Type	Air flow m³/h	Air flow cfm	**Nominal voltage VDC**	Voltage range VDC	Sound power level Bel(A)	Sintec sleeve bearings □ / Ball bearings ■	Power consumption Watts	Nominal speed rpm⁻¹	Temperature range °C	Service life L_{10} (40 °C) ebm-papst standard Hours	Service life L_{10} (T_{max}) ebm-papst standard Hours	Life expectancy L_{10IPC} (40 °C) see page 17 Hours	Curve
RER 133-41/14/2 TDMP	460	271	**24**	16...30	tbd	■	58	5 000	-20...+65	72 500	40 000	122 500	①
RER 133-41/14/2 TDP*	565	332	**24**	16...36	tbd	■	90	6 000	-20...+65	70 000	37 500	117 500	②
RER 133-41/18/2 TDMP*	460	271	**48**	36...57	tbd	■	50	5 000	-20...+65	72 500	40 000	122 500	①
RER 133-41/18/2 TDP	565	332	**48**	36...72	8.2	■	87	6 000	-20...+65	70 000	37 500	117 500	②

Subject to change

* On request

Speed control range from 800 rpm⁻¹ at 7% PWM up to nominal speed at > 90% PWM.
Standstill at 0% PWM, maximum speed if control cable is interrupted.

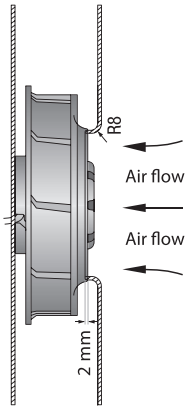

The air flow and sound level of the centrifugal fans without external housing depend on their individual installation conditions.
The stated air flow and sound level were recorded under the following measurement parameters:
Centrifugal fan mounted on a foundation plate 140 x 140 mm.
Cover plate 140 x 140 mm, with an air inlet opening Ø 87 mm, arranged concentrically to the impeller.

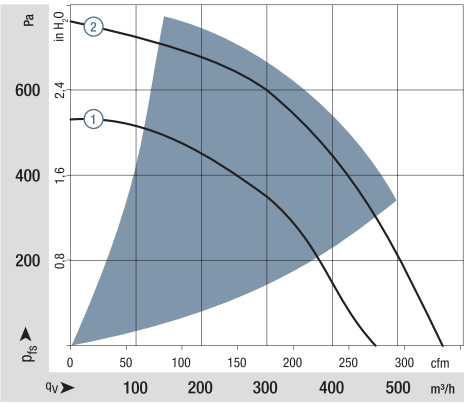

Air performance measured according to: ISO 5801.
Installation category A, with ebm-papst inlet ring without contact protection.
Noise: Total sound power level L_{WA}
ISO 103002 measured on a hemisphere with a distance of 2 m;
Sound pressure level L_{pA} measured at 1 m distance from fan axis.
The values given are applicable only under the specified measuring conditions and may differ depending on the installation conditions.
In the event of deviation from the standard configuration, the parameters must be checked after installation!
For detailed information see http://www.ebmpapst.com/general conditions

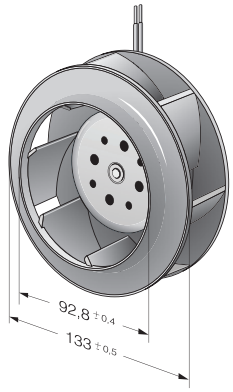

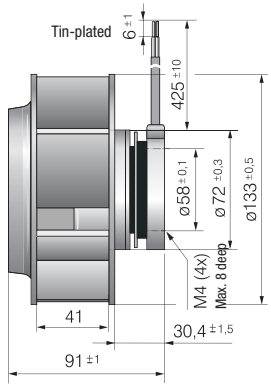

Max. 255 m³/h

DC centrifugal fans

Ø 165 x 51 mm

- **Material:** Impeller: GRP[1)]
- **Direction of air flow:** Axial: Intake, Centrifugal: Exhaust
- **Direction of rotation:** Counterclockwise, looking towards rotor
- **Connection:** via single wires AWG 22, TR 64
- **Highlights:** Backward-curved impeller
- **Weight:** 590 g

- **Possible special versions:**
  (See chapter DC fans - specials)
  - Speed signal
  - Go / NoGo alarm
  - Alarm with speed limit
  - External temperature sensor
  - Internal temperature sensor
  - PWM control input
  - Analog control input
  - Moisture protection
  - Salt spray protection
  - Degree of protection: IP 54

1) Fiberglass-reinforced plastic

Series RER 160 N **Nominal data**	Air flow	Air flow	**Nominal voltage**	Voltage range	Sound power level	Sintec sleeve bearings Ball bearings	Power consumption	Nominal speed	Temperature range	Service life L_{10} (40 °C) ebm-papst standard Service life L_{10} (T_{max}) ebm-papst standard	Life expectancy L_{10IPC} (40 °C) see page 17	Curve
Type	**m³/h**	**cfm**	**VDC**	**VDC**	**Bel(A)**	□/■	**Watts**	**rpm⁻¹**	**°C**	**Hours**	**Hours**	
RER 160-28/12 N	255	150	**12**	7...14	6.4	■	19.0	3 000	-20...+70	75 000 / 37 500	127 500	①
RER 160-28/14 N	255	150	**24**	12...28	6.4	■	19.0	3 000	-20...+70	75 000 / 37 500	127 500	①
RER 160-28/18 N	255	150	**48**	28...60	6.4	■	19.0	3 000	-20...+70	75 000 / 37 500	127 500	①

Subject to change

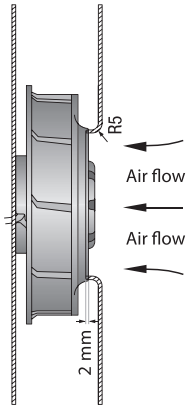

The air flow and sound level of the centrifugal fans without external housing depend on their individual installation conditions.
The stated air flow and sound level were recorded under the following measurement parameters:
Centrifugal fan mounted on a foundation plate 260 x 260 mm.
Cover plate 260 x 260 mm, with an air inlet opening Ø 100 mm, arranged concentrically to the impeller.

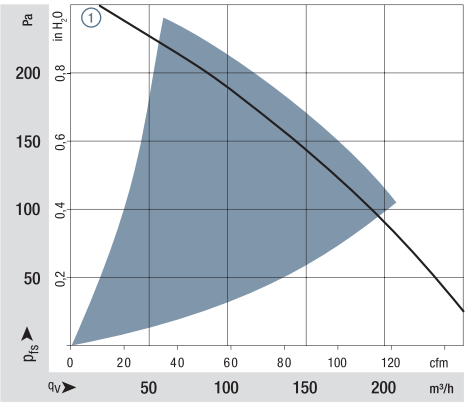

Air performance measured according to: ISO 5801.
Installation category A, with ebm-papst inlet ring without contact protection.
Noise: Total sound power level L_{WA} ISO 103002 measured on a hemisphere with a distance of 2 m;
Sound pressure level L_{pA} measured at 1 m distance from fan axis.
The values given are applicable only under the specified measuring conditions and may differ depending on the installation conditions.
In the event of deviation from the standard configuration, the parameters must be checked after installation!
For detailed information see http://www.ebmpapst.com/general conditions

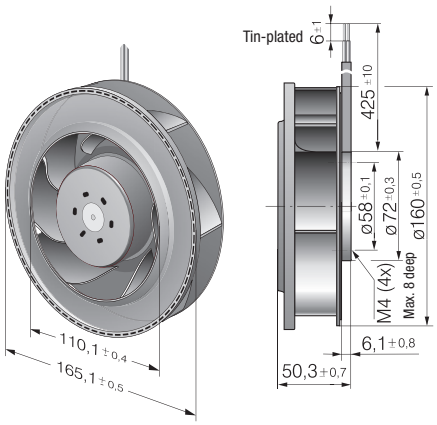

Inlet rings
from p. 252

Max. 360 m³/h

S-Force

DC centrifugal fans

Ø 165 x 51 mm

- **Material:** Impeller: GRP[1)]
- **Direction of air flow:** Axial: Intake, Centrifugal: Exhaust
- **Direction of rotation:** Clockwise, looking towards rotor
- **Connection:** via single wires AWG 22, TR 64
- **Highlights:** Highly efficient and smoothly operating 3-phase fan drive Backward-curved impeller
- **Weight:** 590 g

- **Possible special versions:** (See chapter DC fans - specials)
  - Speed signal
  - Go / NoGo alarm
  - Alarm with speed limit
  - External temperature sensor
  - Internal temperature sensor
  - PWM control input
  - Analog control input
  - Humidity protection
  - Degree of protection: IP 54

1) Fiberglass-reinforced plastic

Series RER 160 NTD

Nominal data Type	Air flow m³/h	Air flow cfm	**Nominal voltage** VDC	Voltage range VDC	Sound power level Bel(A)	Sintec sleeve bearings / Ball bearings □/■	Power consumption Watts	Nominal speed rpm⁻¹	Temperature range °C	Service life L_{10} (40 °C) ebm-papst standard / Service life L_{10} (T_{max}) ebm-papst standard Hours	Life expectancy L_{10IPC} (40 °C) see page 17 Hours	Curve
RER 160-28/14 NTD…	360	211	**24**	16...28	7.4	■	51	4 200	-20...+60	55 000 / 27 500	92 500	②
RER 160-28/18 NTD…	360	211	**48**	38...57	7.4	■	48	4 200	-20...+70	55 000 / 27 500	92 500	①

Subject to change

Model RER 160-28/18 NTD... is available in customer-specific, custom-developed variant only.
The figures indicated are technically feasible benchmark values. The fans can be specially adapted to your application with signal outputs and control inputs.
* The specific service life is valid when an external capacitor is wired between the positive and negative wires.
Please note the wiring suggestion.

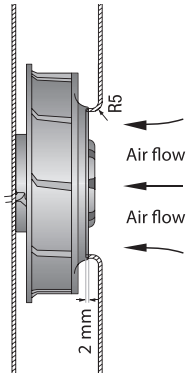

The air flow and sound level of the centrifugal fans without external housing depend on their individual installation conditions.
The stated air flow and sound level were recorded under the following measurement parameters:
Centrifugal fan mounted on a foundation plate 260 x 260 mm.
Cover plate 260 x 260 mm, with an air inlet opening Ø 100 mm, arranged concentrically to the impeller.

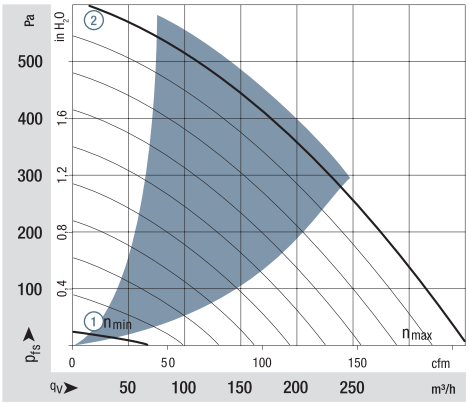

Air performance measured according to: ISO 5801.
Installation category A, with ebm-papst inlet ring without contact protection.
Noise: Total sound power level L_{WA} ISO 103002 measured on a hemisphere with a distance of 2 m;
Sound pressure level L_{pA} measured at 1 m distance from fan axis.
The values given are applicable only under the specified measuring conditions and may differ depending on the installation conditions.
In the event of deviation from the standard configuration, the parameters must be checked after installation!
For detailed information see http://www.ebmpapst.com/general conditions

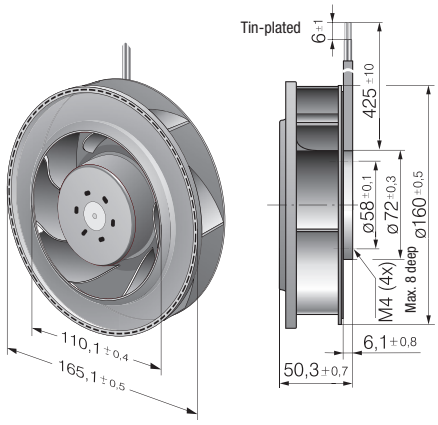

Max. 800 m³/h

S-Force

DC centrifugal fans

Ø 175 x 55 mm

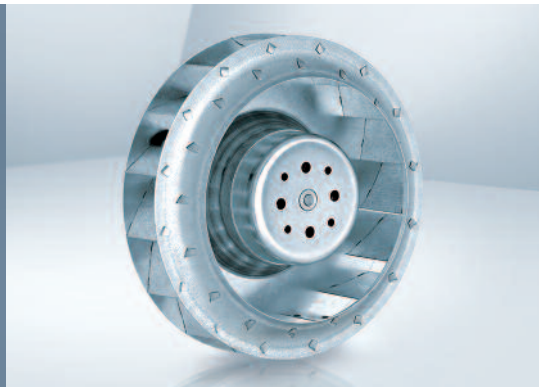

- **Material:** Impeller: Galvanized sheet steel
- **Direction of air flow:** Axial: Intake, Centrifugal: Exhaust
- **Direction of rotation:** Clockwise, looking towards rotor
- **Connection:** via single wires AWG 18, 20 or AWG 22, TR 64. Speed signal and control input AWG 22
- **Highlights:** Highly efficient and smoothly operating 3-phase fan drive Backward-curved impeller
- **Weight:** 930 g

- **Possible special versions:** (See chapter DC fans - specials)
  - Speed signal
  - Go / NoGo alarm
  - Alarm with speed limit
  - External temperature sensor
  - Internal temperature sensor
  - PWM control input
  - Analog control input
  - Multi-option control input
  - Humidity protection
  - Degree of protection: IP 54

Series RER 175 TD

Nominal data Type	Air flow m³/h	Air flow cfm	**Nominal voltage** VDC	Voltage range VDC	Sound power level Bel(A)	Sintec sleeve bearings / Ball bearings □ / ■	Power consumption Watts	Nominal speed rpm⁻¹	Temperature range °C	Service life L_{10} (40 °C) ebm-papst standard / Service life L_{10} (T_{max}) ebm-papst standard Hours	Life expectancy L_{10IPC} (40 °C) see page 17 Hours	Curve
REF 175-30/18/2 TDP	800	470	**48**	36 ... 72	8.3	■	144	4 400	-20...+60	65 000 / 37 500	110 000	①

Subject to change

Speed control range from 800 rpm⁻¹ at 7% PWM up to nominal speed at > 90% PWM.
Standstill at 0% PWM, maximum speed if control cable is interrupted.

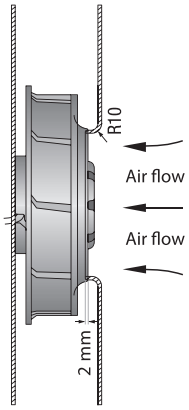

The air flow and sound level of the centrifugal fans without external housing depend on their individual installation conditions.
The stated air flow and sound level were recorded under the following measurement parameters:
Centrifugal fan mounted on a foundation plate 180 x 180 mm.
Cover plate 180 x 180 mm, with an air inlet opening Ø 125.5 mm, arranged concentrically to the impeller.

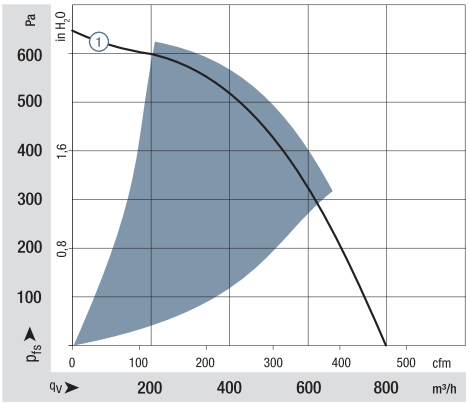

Air performance measured according to: ISO 5801.
Installation category A, with ebm-papst inlet ring without contact protection.
Noise: Total sound power level L_{WA} ISO 103002 measured on a hemisphere with a distance of 2 m;
Sound pressure level L_{pA} measured at 1 m distance from fan axis.
The values given are applicable only under the specified measuring conditions and may differ depending on the installation conditions.
In the event of deviation from the standard configuration, the parameters must be checked after installation!
For detailed information see http://www.ebmpapst.com/general conditions

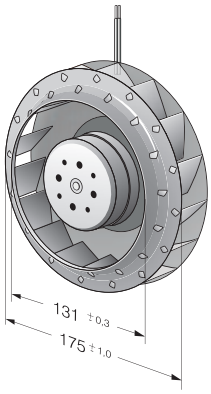

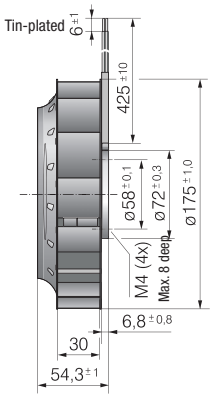

Inlet rings
from p. 252

Max. 980 m³/h

S-Force

DC centrifugal fans

Ø 175 x 69 mm

- **Material:** Impeller: GRP[1)]
- **Direction of air flow:** Axial: Intake, Centrifugal: Exhaust
- **Direction of rotation:** Clockwise, looking towards rotor
- **Connection:** Via single wires AWG 18, 20 or AWG 22, TR 64, speed signal and control input AWG 22
- **Highlights:** Highly efficient and smoothly operating 3-phase fan drive Backward-curved impeller
- **Weight:** 775 g

1) Fiberglass-reinforced plastic

- **Possible special versions:**
  (See chapter DC fans - specials)
  - Speed signal
  - Go / NoGo alarm
  - Alarm with speed limit
  - External temperature sensor
  - Internal temperature sensor
  - PWM control input
  - Analog control input
  - Multi-option control input
  - Moisture protection
  - Salt spray protection
  - Degree of protection: IP 54

Series RER 175 TD

Nominal data

Type	Air flow m³/h	Air flow cfm	**Nominal voltage VDC**	Voltage range VDC	Sound power level Bel(A)	Sintec sleeve bearings □ / Ball bearings ■	Power consumption Watts	Nominal speed rpm⁻¹	Temperature range °C	Service life L_{10} (40 °C) ebm-papst standard Hours	Service life L_{10} (T_{max}) ebm-papst standard Hours	Life expectancy L_{10IPC} (40 °C) see page 17 Hours	Curve
RER 175-42/14/2 TDMLP	600	353	**24**	16...30	7.3	■	48	3 400	-20...+65	72 500 / 40 000		122 500	①
RER 175-42/14/2 TDMP	865	509	**24**	16...36	8.2	■	110	4 800	-20...+65	70 000 / 40 000		117 500	②
RER 175-42/18/2 TDMLP	600	353	**48**	36...57	7.3	■	46	3 400	-20...+65	72 500 / 40 000		122 500	①
RER 175-42/18/2 TDMP*	865	509	**48**	36...72	8.2	■	110	4 800	-20...+65	70 000 / 40 000		117 500	②
RER 175-42/18/2 TDP	980	577	**48**	36...72	8.5	■	166	5 400	-20...+65	60 000 / 32 500		102 500	③

Subject to change

* On request

Speed control range from 800 rpm⁻¹ at 7% PWM up to nominal speed at > 90% PWM.
Standstill at 0% PWM, maximum speed if control cable is interrupted.

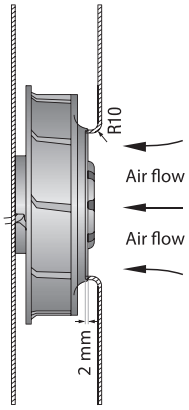

The air flow and sound level of the centrifugal fans without external housing depend on their individual installation conditions.
The stated air flow and sound level were recorded under the following measurement parameters:
Centrifugal fan mounted on a foundation plate 180 x 180 mm.
Cover plate 180 x 180 mm, with an air inlet opening Ø 125.5 mm, arranged concentrically to the impeller.

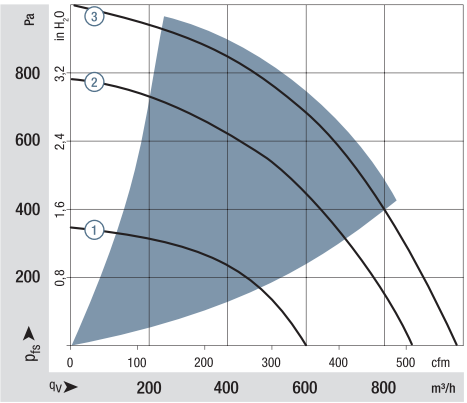

Air performance measured according to: ISO 5801.
Installation category A, with ebm-papst inlet ring without contact protection.
Noise: Total sound power level L_WA ISO 103002 measured on a hemisphere with a distance of 2 m;
Sound pressure level L_pA measured at 1 m distance from fan axis.
The values given are applicable only under the specified measuring conditions and may differ depending on the installation conditions.
In the event of deviation from the standard configuration, the parameters must be checked after installation!
For detailed information see http://www.ebmpapst.com/general conditions

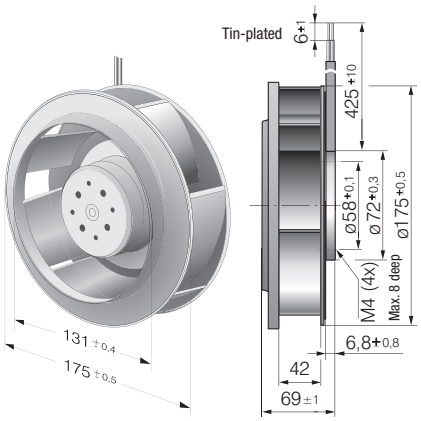

Max. 970 m³/h

S-Force

DC centrifugal fans – RadiCal

Ø 190 x 69 mm

- **Material:** Impeller: GRP[1)]
- **Direction of air flow:** Axial: Intake, Centrifugal: Exhaust
- **Direction of rotation:** Clockwise, looking towards rotor
- **Connection:** Via single wires AWG 18, 20 or AWG 22, TR 64, speed signal and control input AWG 22
- **Highlights:** Highly efficient and smoothly operating 3-phase fan drive Backward-curved RadiCal impeller
- Weight: 870 g

1) Fiberglass-reinforced plastic

- **Possible special versions:** (See chapter DC fans - specials)
  - Speed signal
  - Go / NoGo alarm
  - Alarm with speed limit
  - External temperature sensor
  - Internal temperature sensor
  - PWM control input
  - Analog control input
  - Multi-option control input
  - Moisture protection
  - Salt spray protection
  - Degree of protection: IP 54

Series RER 190 TD **Nominal data**	Air flow	Air flow	**Nominal voltage**	Voltage range	Sound power level	Sintec sleeve bearings / Ball bearings	Power consumption	Nominal speed	Temperature range	Service life L_{10} (40 °C) ebm-papst standard / Service life L_{10} (T_{max}) ebm-papst standard	Life expectancy L_{10IPC} (40 °C) see page 17	Curve
Type	**m³/h**	**cfm**	**VDC**	**VDC**	**Bel(A)**	□/■	**Watts**	**rpm⁻¹**	**°C**	**Hours**	**Hours**	
RER 190-39/14/2 TDMLO	650	382	**24**	16...30	7.6	■	58	3 000	-20...+60	55 000 / 35 000	92 500	①
RER 190-39/14/2 TDMO	860	506	**24**	16...36	7.9	■	110	3 900	-20...+65	52 500 / 30 000	87 500	②
RER 190-39/18/2 TDMLO*	650	382	**48**	36...57	7.6	■	56	3 000	-20...+65	55 000 / 30 000	92 500	①
RER 190-39/18/2 TDMO*	860	506	**48**	36...72	7.9	■	105	3 900	-20...+65	52 500 / 30 000	87 500	②
RER 190-39/18/2 TDO	970	571	**48**	36...72	8.3	■	148	4 400	-20...+65	40 000 / 22 500	67 500	③

Subject to change

* On request

Speed control range from 800 rpm⁻¹ at 7% PWM up to nominal speed at > 90% PWM.
Standstill at 0% PWM, Standstill if control cable is interrupted.

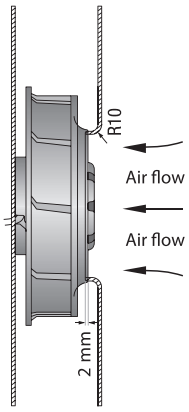

The air flow and sound level of the centrifugal fans without external housing depend on their individual installation conditions.
The stated air flow and sound level were recorded under the following measurement parameters:
Centrifugal fan mounted on a foundation plate 195 x 195 mm.
Cover plate 195 x 195 mm, with an air inlet opening Ø 125.5 mm, arranged concentrically to the impeller.

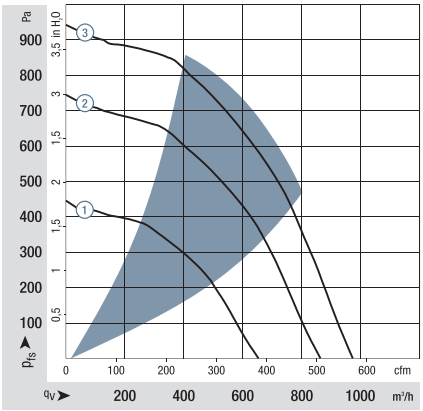

Air performance measured according to: ISO 5801.
Installation category A, with ebm-papst inlet ring without contact protection.
Noise: Total sound power level L_WA
ISO 103002 measured on a hemisphere with a distance of 2 m;
Sound pressure level L_pA measured at 1 m distance from fan axis.
The values given are applicable only under the specified measuring conditions and may differ depending on the installation conditions.
In the event of deviation from the standard configuration, the parameters must be checked after installation!
For detailed information see
http://www.ebmpapst.com/general conditions

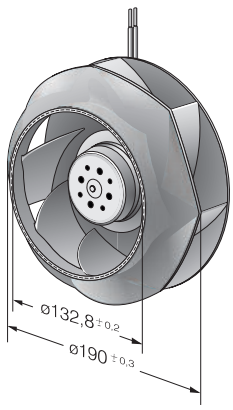

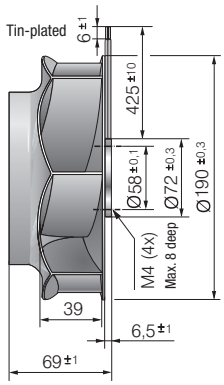

Inlet rings
from p. 252

ebmpapst

Max. 930 m³/h

DC centrifugal fans – RadiCal

Ø 190 mm

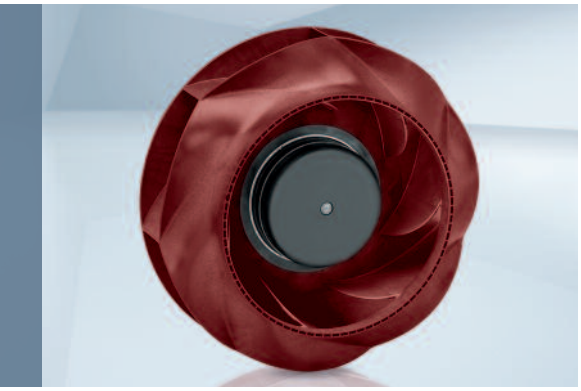

- **Material:** Impeller: PA plastic
  Rotor: Painted black
- **Number of blades:** 7
- **Direction of rotation:** Clockwise, looking towards rotor
- **Degree of protection:** IP 44, depending on installation and position
- **Insulation class:** "B"
- **Installation position:** Any
- **Condensation drainage holes:** None
- **Mode of operation:** Continuous operation (S1)
- **Bearings:** Maintenance-free ball bearings

Nominal data		Curve	Nominal voltage	Nominal voltage range	Air flow	Nominal speed	Power consumption	Input current	Sound pressure level	Admissible amb. temp.	Technical features and connection diagram
Type	**Motor**		**VDC**	**VDC**	**m³/h**	**rpm⁻¹**	**W**	**A**	**dB(A)**	**°C**	
R3G 190	M3G 074-CF	A	24	16-28	880	4570	180	7.50	76	-25..+60	p. 262 / J5)
R3G 190	M3G 074-CF	B	48	36-57	930	4800	192	4.00	76	-25..+60	p. 262 / J5)

Subject to change

Curves:

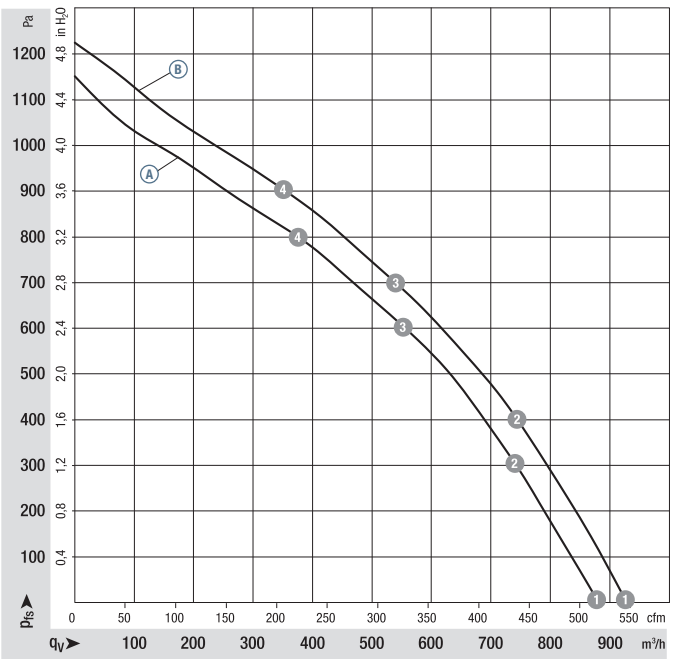

		n rpm⁻¹	P_{ed} W	I A	L_WA dB(A)
A	1	4570	180	7.50	84
A	2	4525	188	7.83	79
A	3	4435	199	8.34	77
A	4	4520	191	7.96	81
B	1	4800	192	4.00	84
B	2	4690	212	4.41	80
B	3	4640	221	4.60	79
B	4	4740	205	4.28	81

Air performance measured according to: ISO 5801, Installation category A, with ebm-papst inlet ring without contact protection. Suction-side noise levels: LWA according to ISO 13347, L_pA measured at 1 m distance from fan axis. The values given are applicable only under the specified measuring conditions and may differ depending on the installation conditions. In the event of deviation from the standard configuration, the parameters must be checked after installation! For detailed information see http://www.ebmpapst.com/general conditions

ebmpapst

- **Technical features:** See connection diagram p. 262
- **Cable exit:** Variable
- **Conformity with standard(s):** EN 60950-1
- **Approvals:** EAC

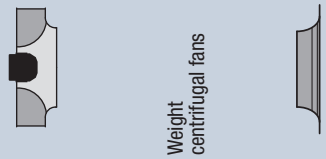

Centrifugal fans	Weight centrifugal fans kg	Inlet ring
R3G 190-RN38 -01	1.9	09576-2-4013
R3G 190-RN99 -02	1.9	09576-2-4013

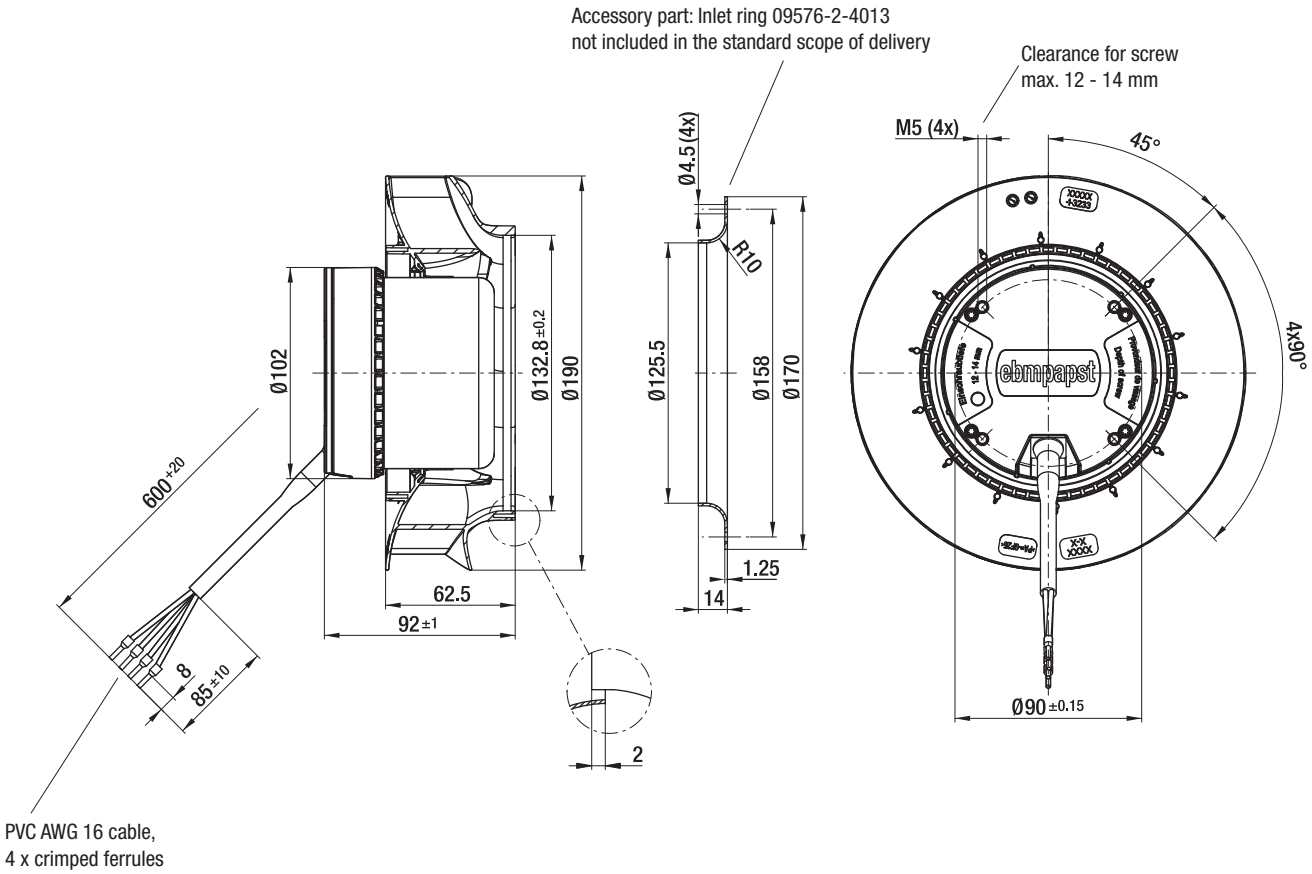

Max. 1215 m³/h

DC centrifugal fans – RadiCal

Ø 220 mm

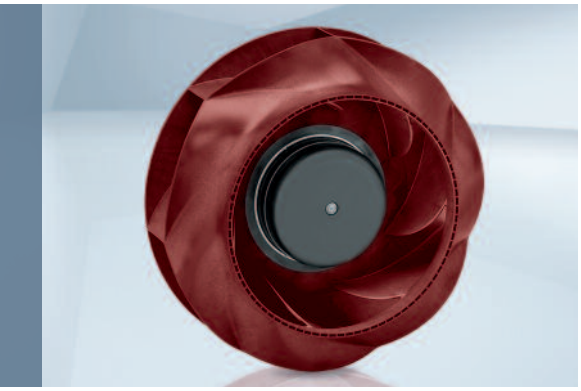

- **Material:** Impeller: PA plastic
  Rotor: Painted black
- **Number of blades:** 7
- **Direction of rotation:** Clockwise, looking towards rotor
- **Degree of protection:** IP 44, depending on installation and position
- **Insulation class:** "B"
- **Installation position:** Any
- **Condensation drainage holes:** None
- **Mode of operation:** Continuous operation (S1)
- **Bearings:** Maintenance-free ball bearings

Nominal data		Curve	Nominal voltage	Nominal voltage range	Air flow	Nominal speed	Power consumption	Input current	Sound pressure level	Admissible amb. temp.	Technical features and connection diagram
Type	**Motor**		**VDC**	**VDC**	**m³/h**	**rpm⁻¹**	**W**	**A**	**dB(A)**	**°C**	
R3G 220	M3G 074-CF	A	24	16-28	1200	3460	157	6.50	73	-25...+60	p. 262 / J5)
R3G 220	M3G 074-CF	B	48	36-57	1215	3510	160	3.40	73	-25...+60	p. 262 / J5)

Subject to change

Curves:

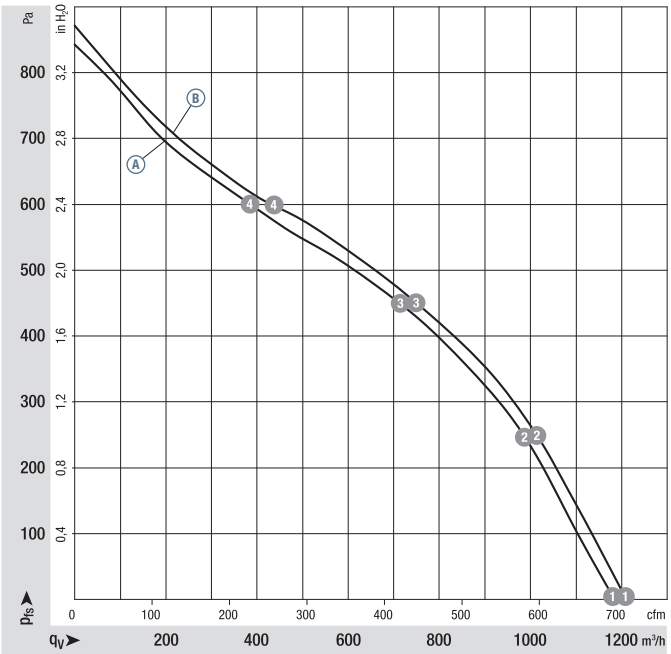

		n rpm⁻¹	P_{ed} W	I A	L_WA dB(A)
A	1	3460	157	6.50	81
A	2	3420	171	7.11	77
A	3	3360	182	7.59	74
A	4	3455	168	6.97	79
B	1	3510	160	3.40	81
B	2	3450	168	3.50	77
B	3	3385	178	3.71	74
B	4	3460	167	3.47	79

Air performance measured according to: ISO 5801, Installation category A, with ebm-papst inlet ring without contact protection. Suction-side noise levels: LWA according to ISO 13347, L_pA measured at 1 m distance from fan axis. The values given are applicable only under the specified measuring conditions and may differ depending on the installation conditions. In the event of deviation from the standard configuration, the parameters must be checked after installation! For detailed information see http://www.ebmpapst.com/general conditions

ebmpapst

- **Technical features:** See connection diagram p. 262
- **Cable exit:** Variable
- **Conformity with standard(s):** EN 60950-1
- **Approvals:** EAC

Centrifugal fans	Weight centrifugal fans kg	Inlet ring
R3G 220-RN12 -01	1.9	09609-2-4013
R3G 220-RNB6 -02	1.9	09609-2-4013

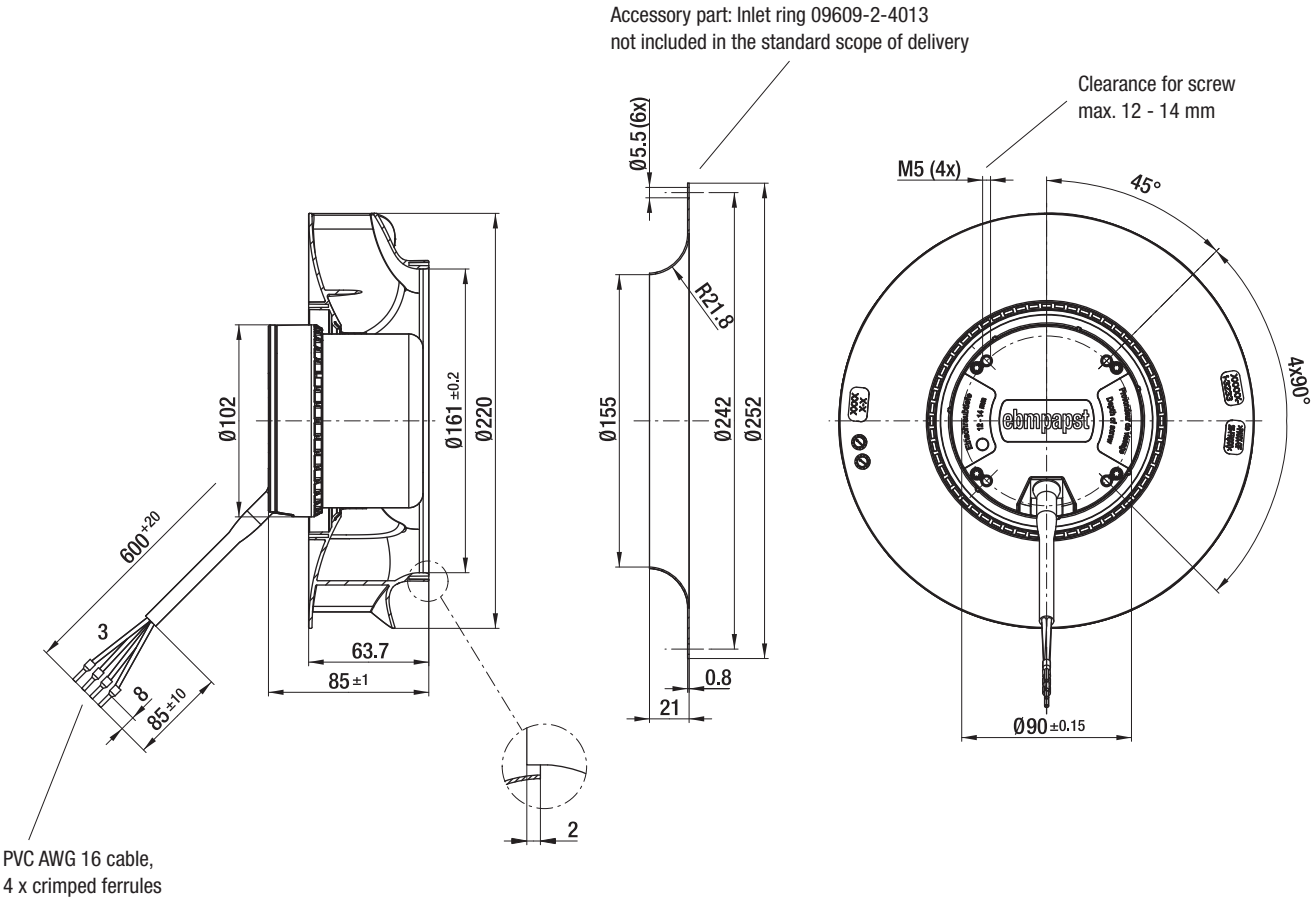

Max. 1250 m³/h

S-Force

DC centrifugal fans – RadiCal

Ø 221 x 71 mm

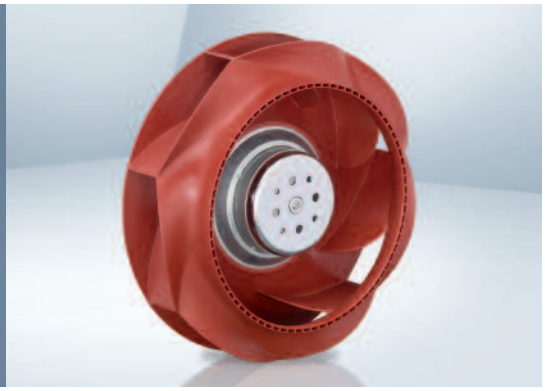

- **Material:** Impeller: GRP[1)]
- **Direction of air flow:** Axial: Intake, Centrifugal: Exhaust
- **Direction of rotation:** Clockwise, looking towards rotor
- **Connection:** Via single wires AWG 18, 20 or AWG 22, TR 64, speed signal and control input AWG 22
- **Highlights:** Highly efficient and smoothly operating 3-phase fan drive Backward-curved impeller
- **Weight:** 940 g

1) Fiberglass-reinforced plastic

- **Possible special versions:**
  (See chapter DC fans - specials)
  - Speed signal
  - Go / NoGo alarm
  - Alarm with speed limit
  - External temperature sensor
  - Internal temperature sensor
  - PWM control input
  - Analog control input
  - Multi-option control input
  - Humidity protection
  - Salt spray protection
  - Degree of protection: IP 54

Series RER 220 TD

Nominal data

Type	Air flow m³/h	Air flow cfm	**Nominal voltage VDC**	Voltage range VDC	Sound power level Bel(A)	Sintec sleeve bearings □ / Ball bearings ■	Power consumption Watts	Nominal speed rpm⁻¹	Temperature range °C	Service life L_{10} (40 °C) ebm-papst standard Hours	Service life L_{10} (T_{max}) ebm-papst standard Hours	Life expectancy L_{10IPC} (40 °C) see page 17 Hours	Curve
RER 220-43/14/2 TDM0*	1063	625	**24**	16...36	tbd	■	110	3 000	-20...+55	65 000 / 45 000		110 000	①
RER 220-43/18/2 TDM0	1063	625	**48**	36...72	tbd	■	110	3 000	-20...+55	65 000 / 45 000		110 000	①
RER 220-43/18/2 TD0	1250	735	**48**	36...72	tbd	■	160	3 500	-20...+55	60 000 / 42 500		102 500	②

Subject to change

* On request

Speed control range from 800 rpm⁻¹ at 7% PWM up to nominal speed at > 90% PWM.
Standstill at 0% PWM, Standstill if control cable is interrupted.

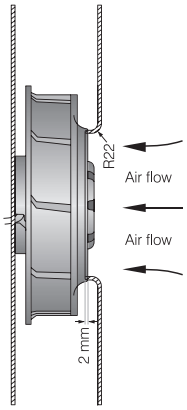

The air flow and sound level of the centrifugal fans without external housing depend on their individual installation conditions.
The stated air flow and sound level were recorded under the following measurement parameters:
Centrifugal fan mounted on a foundation plate 230 x 230 mm.
Cover plate 230 x 230 mm, with an air inlet opening Ø 155 mm, arranged concentrically to the impeller.

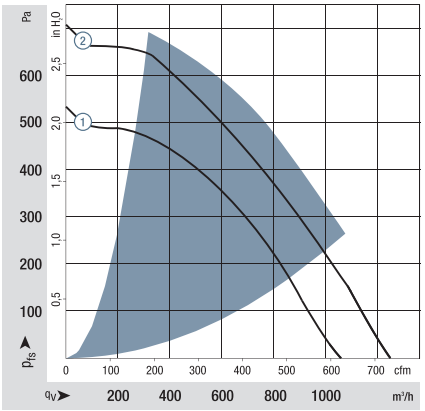

Air performance measured according to: ISO 5801.
Installation category A, with ebm-papst inlet ring without contact protection.
Noise: Total sound power level LWA ISO 103002 measured on a hemisphere with a distance of 2 m.
Sound pressure level LpA measured at 1 m distance from fan axis.
The values given are applicable only under the specified measuring conditions and may differ depending on the installation conditions.
In the event of deviation from the standard configuration, the parameters must be checked after installation!
For detailed information see
http://www.ebmpapst.com/general conditions

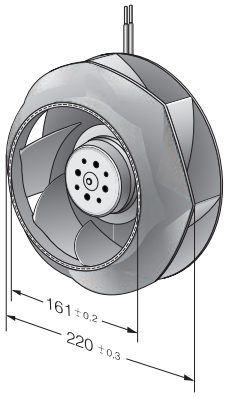

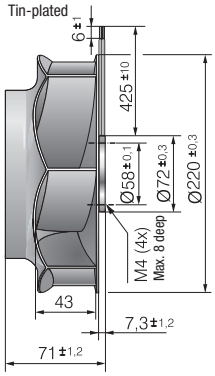

Inlet rings from p. 253

ebmpapst

Max. 1600 m³/h

S-Force

DC centrifugal fans

Ø 225 x 99 mm

- **Material:** Impeller: GRP[1)]
- **Direction of air flow:** Axial: Intake, Centrifugal: Exhaust
- **Direction of rotation:** Clockwise, looking towards rotor
- **Connection:** Via single wires AWG 18, 20 or AWG 22, TR 64, speed signal and control input AWG 22
- **Highlights:** Highly efficient and smoothly operating 3-phase fan drive Backward-curved impeller
- **Weight:** 1030 g

1) Fiberglass-reinforced plastic

- **Possible special versions:** (See chapter DC fans - specials)
  - Speed signal
  - Go / NoGo alarm
  - Alarm with speed limit
  - External temperature sensor
  - Internal temperature sensor
  - PWM control input
  - Analog control input
  - Multi-option control input
  - Humidity protection
  - Salt spray protection
  - Degree of protection: IP 54

Series RER 225 TD

Nominal data

Type	Air flow m³/h	Air flow cfm	**Nominal voltage VDC**	Voltage range VDC	Sound power level Bel(A)	Sintec sleeve bearings □ / Ball bearings ■	Power consumption Watts	Nominal speed rpm⁻¹	Temperature range °C	Service life L_{10} (40 °C) ebm-papst standard Hours	Service life L_{10} (T_{max}) ebm-papst standard Hours	Life expectancy L_{10IPC} (40 °C) see page 17 Hours	Curve
RER 225-63/18/2 TDMLO	1190	700	**48**	36...72	7.2	■	77	2 500	-20...+55	70 000 / 50 000		122 500	①
RER 225-63/18/2 TDMO	1340	789	**48**	36...72	7.8	■	108	2 800	-20...+55	55 000 / 40 000		92 500	②
RER 225-63/18/2 TDO	1600	941	**48**	36...72	8.1	■	163	3 300	-20...+55	52 500 / 37 500		87 500	③

Subject to change

Speed control range from 800 rpm⁻¹ at 7% PWM up to nominal speed at > 90% PWM.
Standstill at 0% PWM, Type O: Standstill if control cable is interrupted. Type P: Maximum speed if control cable is interrupted.

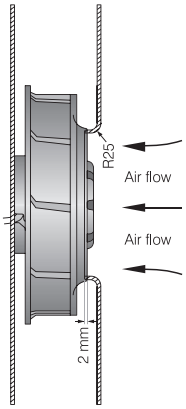

The air flow and sound level of the centrifugal fans without external housing depend on their individual installation conditions.
The stated air flow and sound level were recorded under the following measurement parameters:
Centrifugal fan mounted on a foundation plate 230 x 230 mm.
Cover plate 230 x 230 mm, with an air inlet opening Ø 146 mm, arranged concentrically to the impeller.

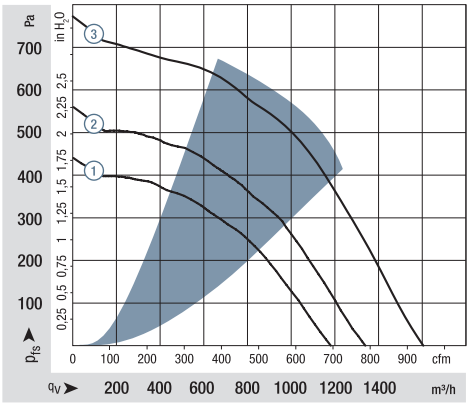

Air performance measured according to: ISO 5801.
Installation category A, with ebm-papst inlet ring without contact protection.
Noise: Total sound power level LWA ISO 103002 measured on a hemisphere with a distance of 2 m.
Sound pressure level LpA measured at 1 m distance from fan axis.
The values given are applicable only under the specified measuring conditions and may differ depending on the installation conditions.
In the event of deviation from the standard configuration, the parameters must be checked after installation!
For detailed information see http://www.ebmpapst.com/general conditions

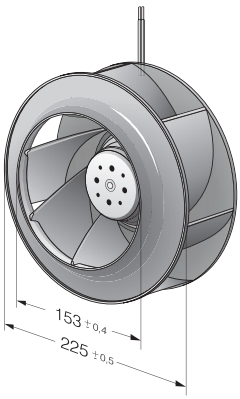

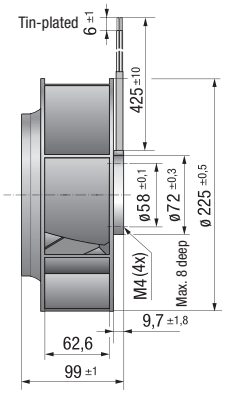

Max. 1340 m³/h

DC centrifugal fans – RadiCal

Ø 225 mm

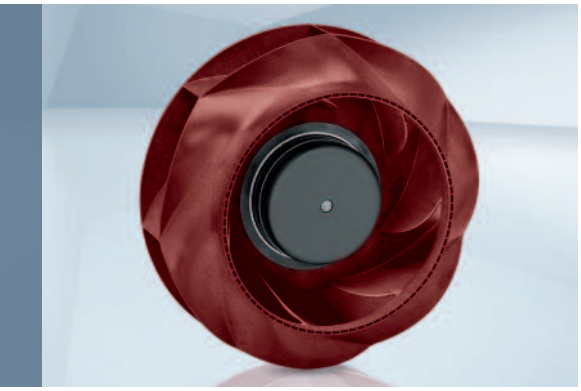

- **Material:** Impeller: PA plastic
  Rotor: Painted black
- **Number of blades:** 7
- **Direction of rotation:** Clockwise, looking towards rotor
- **Degree of protection:** IP 44, depending on installation and position
- **Insulation class:** "B"
- **Installation position:** Any
- **Condensation drainage holes:** None
- **Mode of operation:** Continuous operation (S1)
- **Bearings:** Maintenance-free ball bearings

Nominal data		Curve	Nominal voltage	Nominal voltage range	Air flow	Nominal speed	Power consumption	Input current	Sound pressure level	Admissible amb. temp.	Technical features and connection diagram
Type	**Motor**		**VDC**	**VDC**	**m³/h**	**rpm⁻¹**	**W**	**A**	**dB(A)**	**°C**	
R3G 225	M3G 074-CF	A	24	16-28	1300	3270	205	8.50	75	-25...+60	p. 262 / J5)
R3G 225	M3G 074-CF	B	48	36-57	1340	3400	230	4.80	73	-25...+60	p. 262 / J5)

Subject to change

Curves:

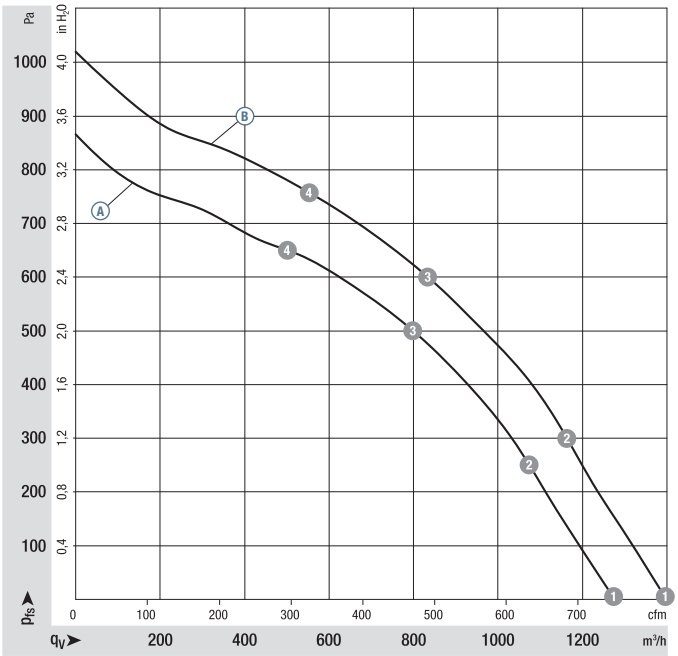

		n rpm⁻¹	P_{ed} W	I A	L_WA dB(A)
A	1	3270	205	8.50	81
A	2	3200	208	8.66	78
A	3	3185	213	8.88	74
A	4	3260	194	8.02	77
B	1	3400	230	4.80	83
B	2	3440	257	5.35	80
B	3	3435	260	5.43	76
B	4	3500	239	4.97	78

Air performance measured according to: ISO 5801, Installation category A, with ebm-papst inlet ring without contact protection. Suction-side noise levels: L_WA according to ISO 13347, L_pA measured at 1 m distance from fan axis. The values given are applicable only under the specified measuring conditions and may differ depending on the installation conditions. In the event of deviation from the standard configuration, the parameters must be checked after installation! For detailed information see http://www.ebmpapst.com/general conditions

ebmpapst

- **Technical features:** See connection diagram p. 262
- **Cable exit:** Variable
- **Conformity with standard(s):** EN 60950-1
- **Approvals:** EAC

Centrifugal fans	Weight centrifugal fans kg	Inlet ring
R3G 225-RN28 -01	2.1	96358-2-4013
R3G 225-RN18 -02	2.1	96358-2-4013

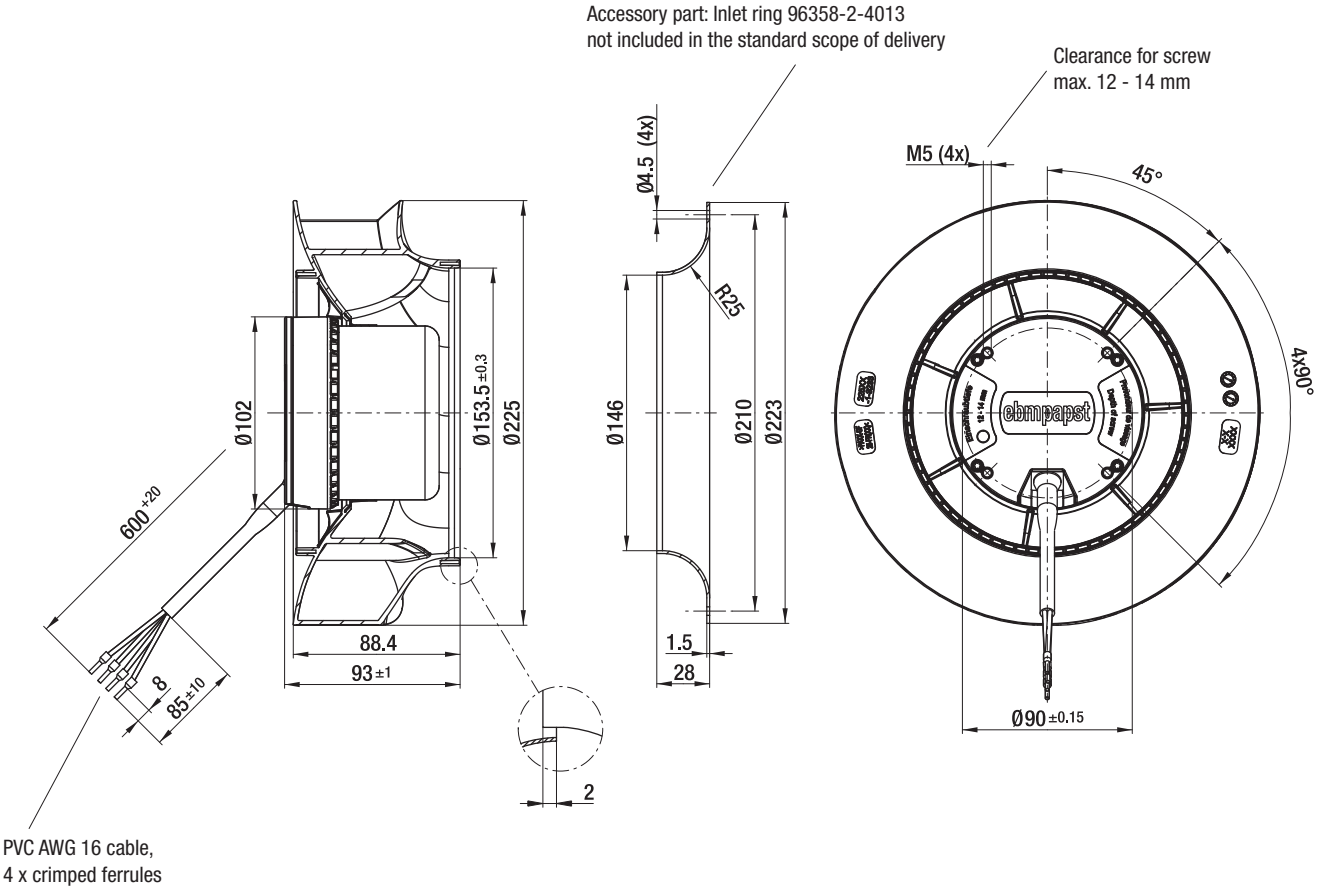

Max. 1640 m³/h

DC centrifugal fans – RadiCal

Ø 250 mm

- **Material:** Impeller: PA plastic
  Rotor: Painted black
- **Number of blades:** 7
- **Direction of rotation:** Clockwise, looking towards rotor
- **Degree of protection:** IP 44, depending on installation and position
- **Insulation class:** "B"
- **Installation position:** Any
- **Condensation drainage holes:** None
- **Mode of operation:** Continuous operation (S1)
- **Bearings:** Maintenance-free ball bearings

Nominal data		Curve	Nominal voltage	Nominal voltage range	Air flow	Nominal speed	Power consumption	Input current	Sound pressure level	Admissible amb. temp.	Technical features and connection diagram
Type	**Motor**		**VDC**	**VDC**	**m³/h**	**rpm⁻¹**	**W**	**A**	**dB(A)**	**°C**	
R3G 250	M3G 074-CF	A	24	16-28	1505	2850	175	7.20	73	-25...+60	p. 262 / J5)
R3G 250	M3G 074-CF	B	48	36-57	1640	3100	230	4.80	73	-25...+60	p. 262 / J5)

Subject to change

Curves:

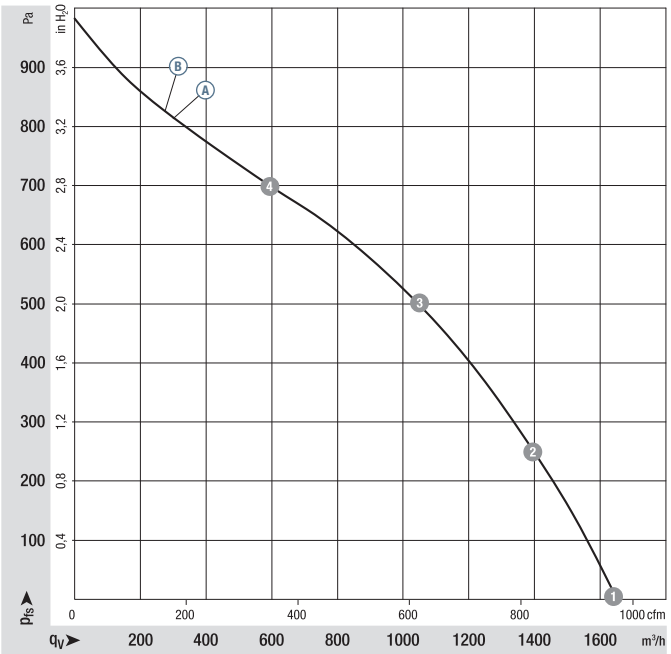

		n rpm⁻¹	P_{ed} W	I A	L_WA dB(A)
A	1	2850	175	7.20	81
A	2	3075	260	10.80	77
A	3	3035	276	11.45	75
A	4	3095	256	10.66	75
B	1	3100	230	4.80	81
B	2	3065	249	5.20	77
B	3	3025	266	5.55	75
B	4	3090	244	5.09	78

Air performance measured according to: ISO 5801, Installation category A, with ebm-papst inlet ring without contact protection. Suction-side noise levels: L_WA according to ISO 13347, L_pA measured at 1 m distance from fan axis. The values given are applicable only under the specified measuring conditions and may differ depending on the installation conditions. In the event of deviation from the standard configuration, the parameters must be checked after installation! For detailed information see http://www.ebmpapst.com/general conditions

ebmpapst

- **Technical features:** See connection diagram p. 262
- **Cable exit:** Variable
- **Conformity with standard(s):** EN 60950-1
- **Approvals:** EAC

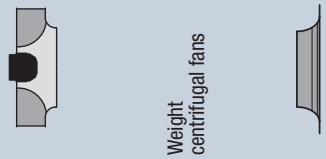

Centrifugal fans	kg	Inlet ring
R3G 250-RN46 -01	2.1	96359-2-4013
R3G 250-RNB5 -02	2.1	96359-2-4013

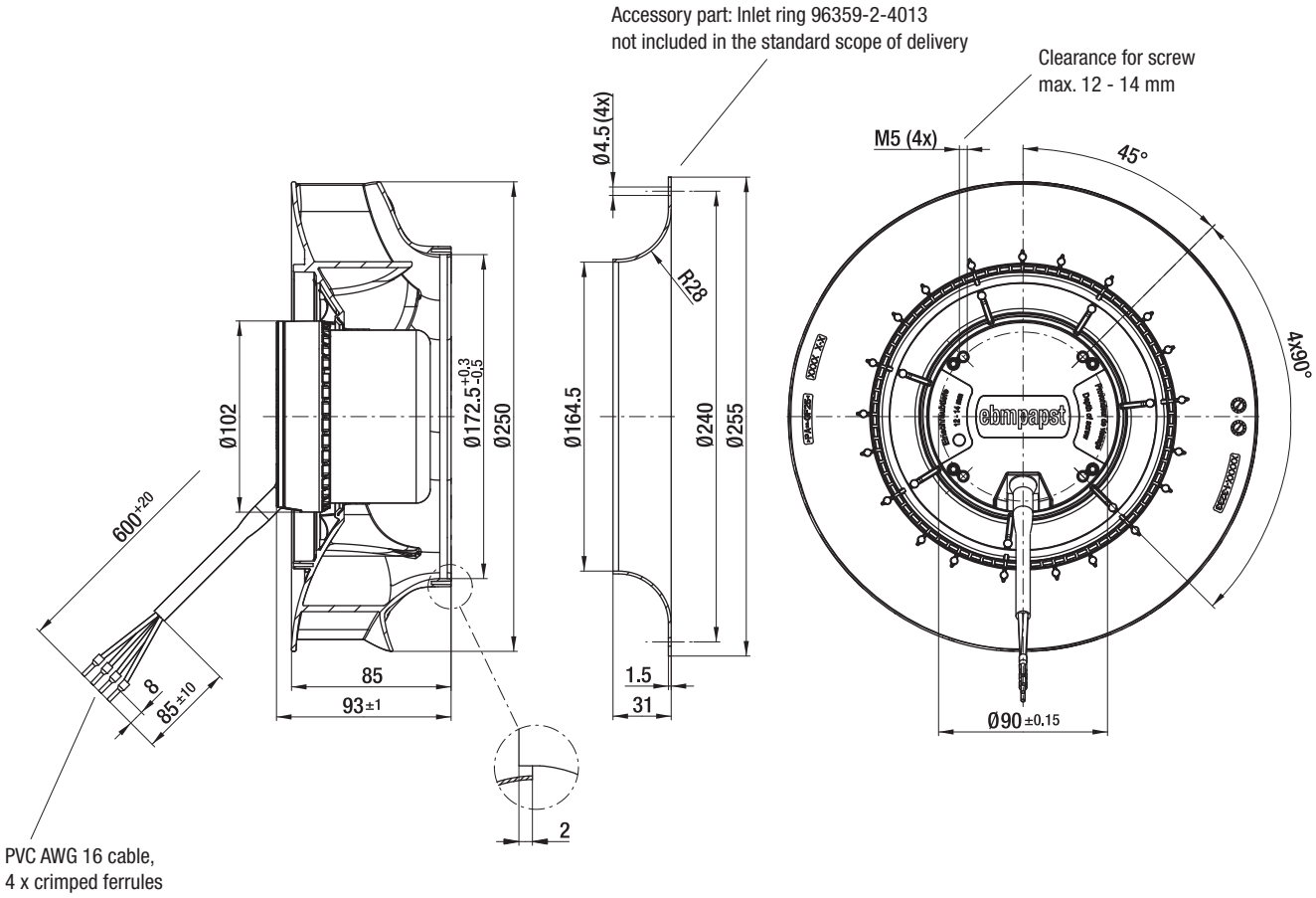

Max. 2190 m³/h

DC centrifugal fans – RadiCal

Ø 280 mm

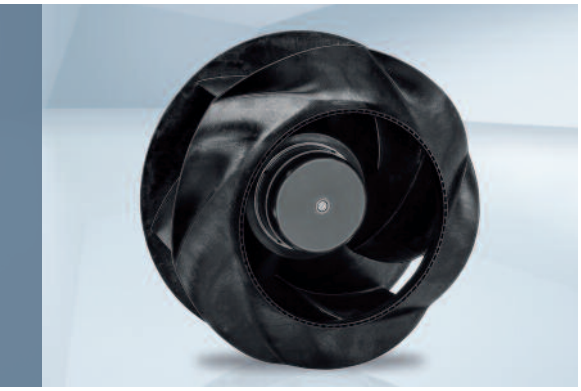

- **Material:** Impeller: PP plastic
  Rotor: Painted black
- **Number of blades:** 6
- **Direction of rotation:** Clockwise, looking towards rotor
- **Degree of protection:** IP 44, depending on installation and position
- **Insulation class:** "B"
- **Installation position:** Any
- **Condensation drainage holes:** None
- **Mode of operation:** Continuous operation (S1)
- **Bearings:** Maintenance-free ball bearings

Nominal data		Curve	Nominal voltage	Nominal voltage range	Air flow	Nominal speed	Power consumption	Input current	Sound pressure level	Admissible amb. temp.	Technical features and connection diagram
Type	**Motor**		**VDC**	**VDC**	**m³/h**	**rpm⁻¹**	**W**	**A**	**dB(A)**	**°C**	
R3G 280	M3G 074-CF	A	24	16-28	2190	1900	142	5.90	67	-25...+60	p. 262 / J5)
R3G 280	M3G 074-CF	B	48	36-57	2160	1910	140	2.90	67	-25...+60	p. 262 / J5)

Subject to change

Curves:

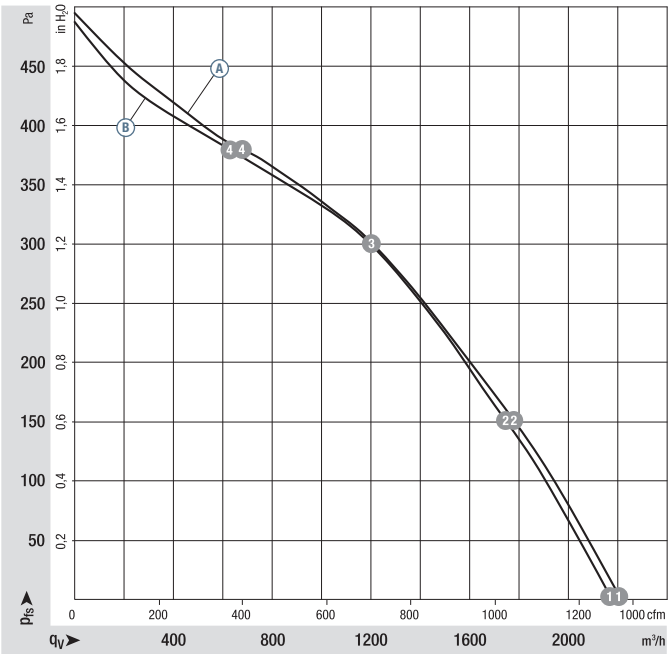

		n rpm⁻¹	P_{ed} W	I A	L_WA dB(A)
A	1	1900	142	5.90	74
A	2	1870	162	6.76	67
A	3	1840	173	7.21	64
A	4	1905	153	6.36	68
B	1	1910	140	2.90	74
B	2	1845	158	3.30	67
B	3	1830	163	3.40	64
B	4	1900	141	2.93	68

Air performance measured according to: ISO 5801, Installation category A, with ebm-papst inlet ring without contact protection. Suction-side noise levels: L_WA according to ISO 13347, L_pA measured at 1 m distance from fan axis. The values given are applicable only under the specified measuring conditions and may differ depending on the installation conditions. In the event of deviation from the standard configuration, the parameters must be checked after installation! For detailed information see http://www.ebmpapst.com/general conditions

ebmpapst

- **Technical features:** See connection diagram p. 262
- **Cable exit:** Variable
- **Conformity with standard(s):** EN 60950-1
- **Approvals:** EAC

Weight centrifugal fans

Centrifugal fans	kg	Inlet ring
R3G 280-RN30 -01	2.4	28000-2-4013
R3G 280-RNB1 -02	2.4	28000-2-4013

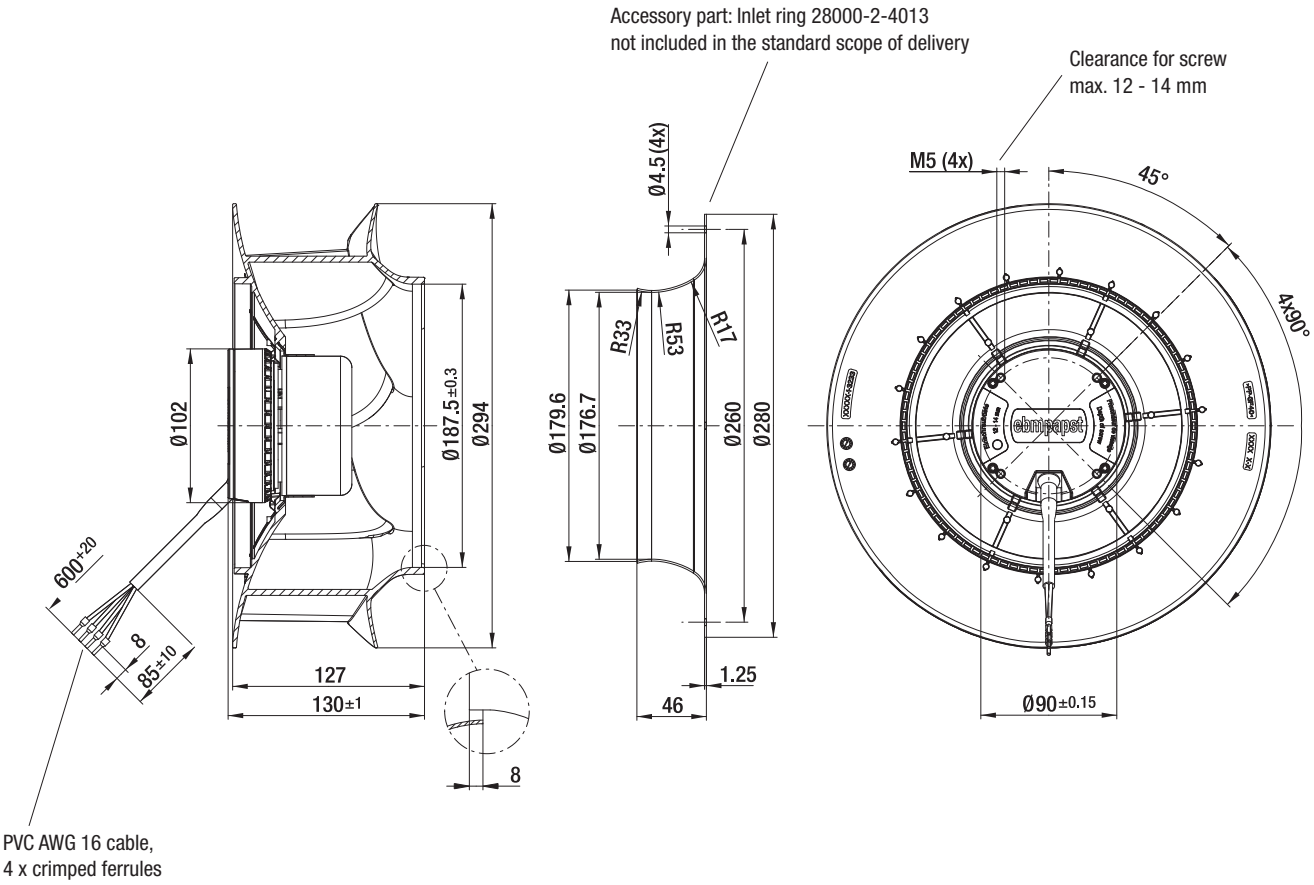

Max. 2380 m³/h

DC centrifugal fans – RadiCal

Ø 310 mm

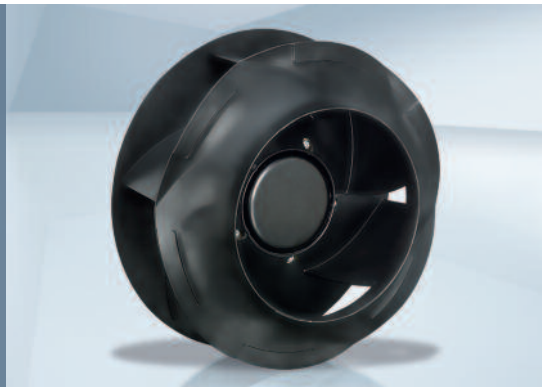

- **Material:** Impeller: PP plastic
  Rotor: Painted black
- **Number of blades:** 6
- **Direction of rotation:** Clockwise, looking towards rotor
- **Degree of protection:** IP 44, depending on installation and position
- **Insulation class:** "B"
- **Installation position:** Any
- **Condensation drainage holes:** None
- **Mode of operation:** Continuous operation (S1)
- **Bearings:** Maintenance-free ball bearings

Nominal data		Curve	Nominal voltage	Nominal voltage range	Air flow	Nominal speed	Power consumption	Input current	Sound pressure level	Admissible amb. temp.	Technical features and connection diagram
Type	**Motor**		**VDC**	**VDC**	**m³/h**	**rpm⁻¹**	**W**	**A**	**dB(A)**	**°C**	
R3G 310	M3G 074-CF	A	24	16-28	2310	1580	108	4.50	64	-25...+60	p. 262 / J5)
R3G 310	M3G 074-CF	B	48	36-57	2380	1620	123	2.60	64	-25...+60	p. 262 / J5)

Subject to change

Curves:

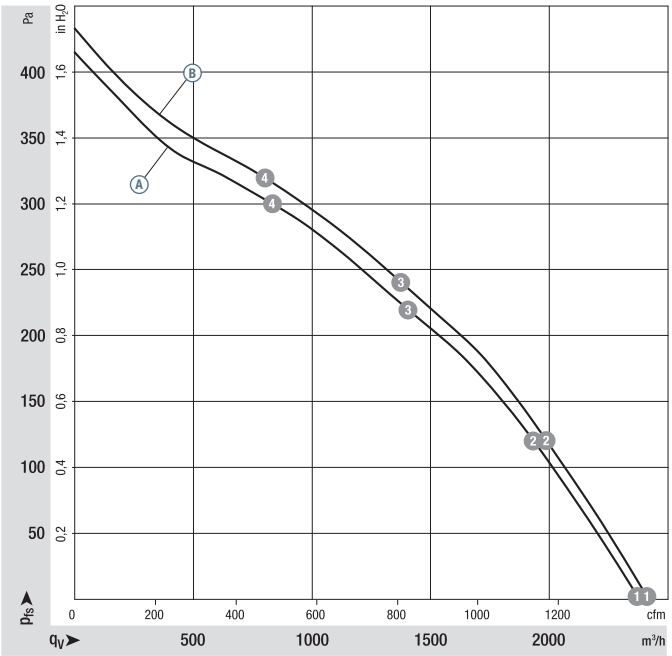

		n rpm⁻¹	P_{ed} W	I A	L_WA dB(A)
A	1	1580	108	4.50	70
A	2	1540	145	6.03	67
A	3	1520	152	6.34	63
A	4	1550	143	5.95	65
B	1	1620	123	2.60	70
B	2	1570	147	3.07	66
B	3	1545	156	3.26	63
B	4	1580	144	3.01	66

Air performance measured according to: ISO 5801, Installation category A, with ebm-papst inlet ring without contact protection. Suction-side noise levels: L_WA according to ISO 13347, L_pA measured at 1 m distance from fan axis. The values given are applicable only under the specified measuring conditions and may differ depending on the installation conditions. In the event of deviation from the standard configuration, the parameters must be checked after installation! For detailed information see http://www.ebmpapst.com/general conditions

ebmpapst

- **Technical features:** See connection diagram p. 262
- **Cable exit:** Variable
- **Conformity with standard(s):** EN 60950-1
- **Approvals:** EAC

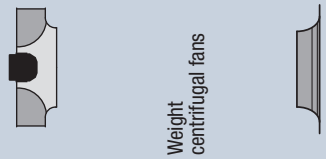

Centrifugal fans	Weight centrifugal fans kg	Inlet ring
R3G 310-RN99 -01	2.8	31000-2-4013
R3G 310-RN98 -02	2.8	31000-2-4013

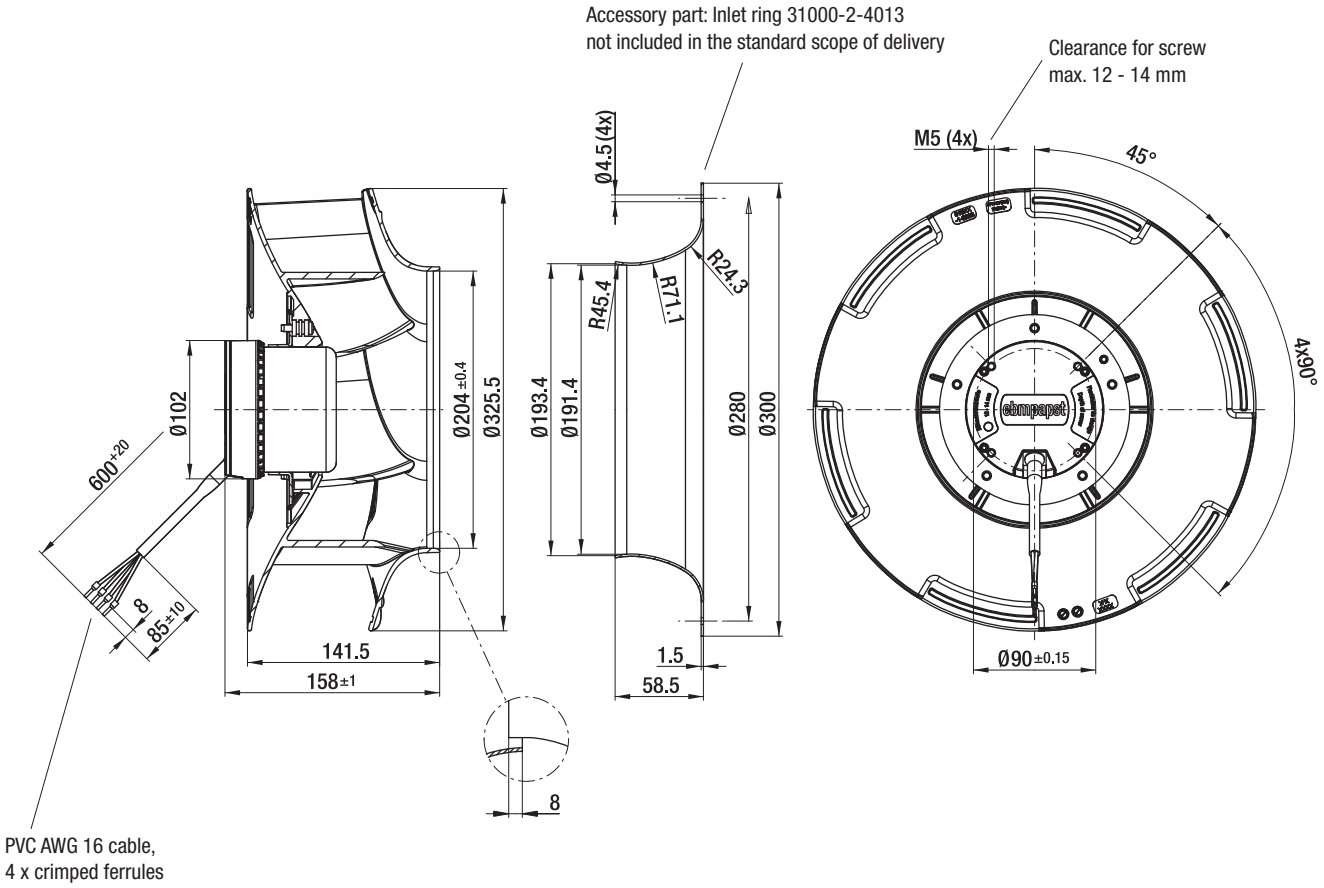

Max. 155 m³/h

DC tangential fans

201...413 x 50 x 48 mm

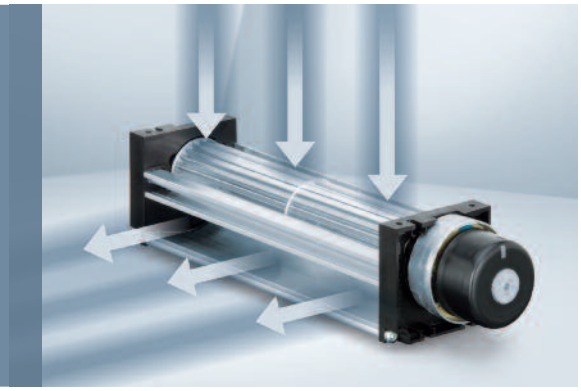

- **Material:** Housing: Aluminum
  Housing side parts: Plastic
  Impeller: Aluminum
- **Direction of air flow:** See photo
- **Connection:** via single wires AWG 24, TR 64
- **Highlights:** Motor with ball bearing system
  Impeller retaining plate with sleeve bearing
- **Weight:** 235 / 290 / 380 / 415 g
- **Possible special versions:**
  (See chapter DC fans - specials)
  - Speed signal
  - Moisture protection

Series QG 030 **Nominal data**	Air flow	Air flow	**Nominal voltage**	Voltage range	Sound pressure level	Sound power level	Sintec sleeve bearings / Ball bearings	Power consumption	Temperature range	Service life L_{10} (40 °C) ebm-papst standard / Service life L_{10} (T_{max}) ebm-papst standard	Life expectancy L_{10IPC} (40 °C) see page 17	Curve
Type	**m³/h**	**cfm**	**VDC**	**VDC**	**db(A)**	**Bel(A)**	□/■	**Watts**	**°C**	**Hours**	**Hours**	
QG 030-148/12	75	44	**12**	8...14	49	5.7	□/■	6.2	-20...+60	30 000 / 20 000	50 000	①
QG 030-198/12	100	59	**12**	8...14	51	5.8	□/■	8,0	-20...+60	30 000 / 20 000	50 000	②
QG 030-303/12	140	82	**12**	8...14	51	5.8	□/■	8.7	-20...+60	30 000 / 20 000	50 000	③
QG 030-353/12	155	91	**12**	8...14	51	5.9	□/■	9.6	-20...+60	30 000 / 20 000	50 000	④
QG 030-148/14	75	44	**24**	16...28	49	5.7	□/■	6.2	-20...+60	30 000 / 20 000	50 000	①
QG 030-198/14	100	59	**24**	16...28	51	5.8	□/■	8.0	-20...+60	30 000 / 20 000	50 000	②
QG 030-303/14	140	82	**24**	16...28	51	5.8	□/■	8.7	-20...+60	30 000 / 20 000	50 000	③
QG 030-353/14	155	91	**24**	16...28	51	5.9	□/■	9.6	-20...+60	30 000 / 20 000	50 000	④

Subject to change

The values for service life were recorded with the fan installed horizontally.

Type Dimension:	L	L_1	Mass
QG 030-148/ ..	$203.4^{+1.5}$	148	235 g
QG 030-198/ ..	$260.4^{+1.5}$	198	290 g
QG 030-303/ ..	$365.4^{+1.5}$	303	380 g
QG 030-353/ ..	$415.4^{+1.5}$	353	415 g

------ Tangential fans are suitable only for operation with high air flow and low back-pressure.

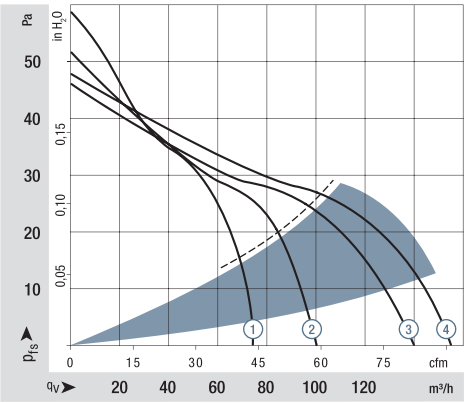

Air performance measured according to: ISO 5801.
Installation category A, without contact protection.
Noise: Total sound power level LWA ISO 103002 measured on a hemisphere with a radius of 2 m.
Sound pressure level LpA measured at 1 m distance to fan axis.
The values given are applicable only under the specified measuring conditions and may differ depending on the installation conditions.
In the event of deviation from the standard configuration, the parameters must be checked after installation!
For detailed information see http://www.ebmpapst.com/general conditions

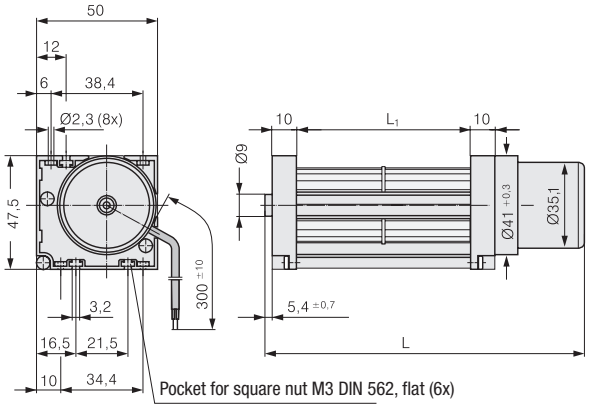

ebmpapst

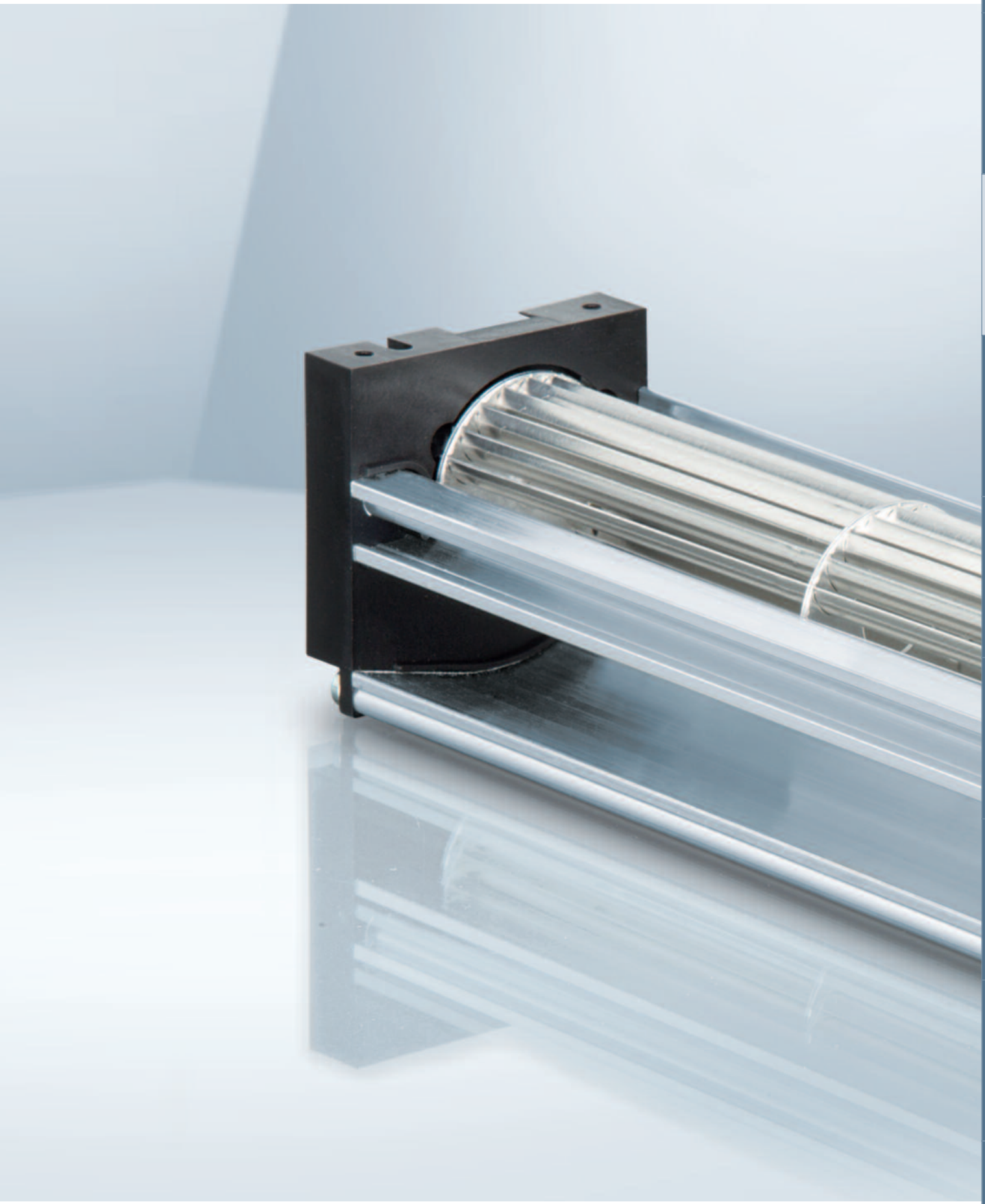

Max. 95 m³/h

DC centrifugal fans and blowers

Ø 85 mm

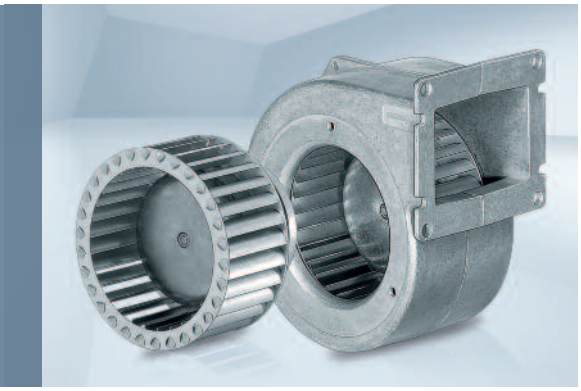

- **Material:** Housing: Die-cast aluminum
  Impeller: Hot-dip galvanized sheet steel
  Rotor: Galvanized
- **Direction of rotation:** Clockwise, looking towards rotor
- **Degree of protection:** IP 22
- **Insulation class:** "B"
- **Installation position:** Any
- **Condensation drainage holes:** None
- **Mode of operation:** Continuous operation (S1)
- **Bearings:** Maintenance-free ball bearings

Nominal data		Curve	Nominal voltage	Nominal voltage range	Air flow	Nominal speed	Power consumption	Input current	Sound pressure level	Min. back-pressure	Admissible amb. temp.	Technical features and connection diagram
Type	**Motor**		**VDC**	**VDC**	**m³/h**	**rpm⁻¹**	**W**	**A**	**dB(A)**	**Pa**	**°C**	
***1G 085**	M1G 045-BE	A	24	16-28	95	2850	14	0.64	57	0	-25...+60	p. 259 / G)
***1G 085**	M1G 045-BE	A	48	36-57	95	2850	14	0.32	57	0	-25...+60	p. 259 / G)

Subject to change

Curves:

U_N = nominal voltage (24 V /48 V)

U_R = over-voltage (28 V / 57 V)

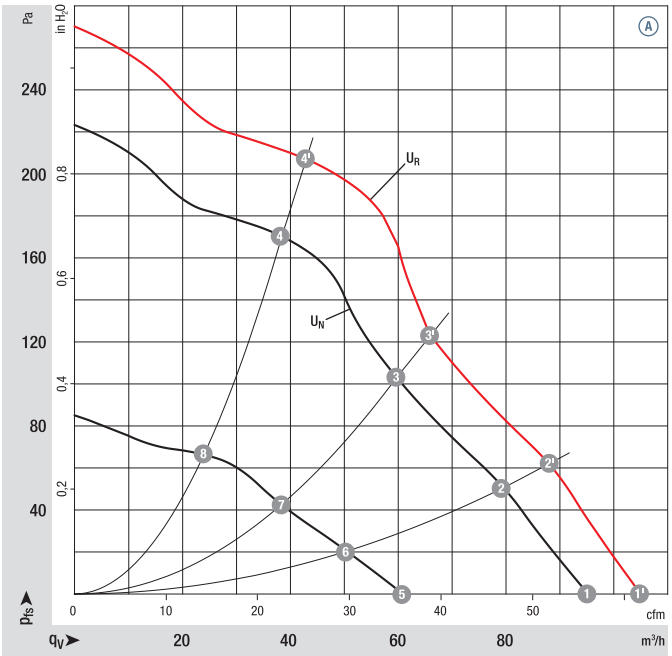

	n rpm⁻¹	P_{ed} W	Lp_A dB(A)	η_{tL} %
A 1'	3180	19	59	—
A 2'	3300	16	57	28
A 3'	3500	15	57	32
A 4'	3800	12	57	37
A 1	2850	14	57	—
A 2	3000	12	55	28
A 3	3180	11	55	32
A 4	3400	9	54	37
A 5	1890	5	46	—
A 6	1970	4	44	25
A 7	2070	4	44	30
A 8	2170	3	42	33

Air performance measured according to: ISO 5801, Installation category A, with ebm-papst scroll housing without contact protection. Suction-side noise levels: L_WA according to ISO 13347, L_pA measured at 1 m distance from fan axis. The values given are applicable only under the specified measuring conditions and may differ depending on the installation conditions. In the event of deviation from the standard configuration, the parameters must be checked after installation! For detailed information see http://www.ebmpapst.com/general conditions

ebmpapst

- **Technical features:** See connection diagram p. 259
- **Cable exit:** Axial
- **Conformity with standard(s):** EN 60950-1
- **Approvals:** EAC

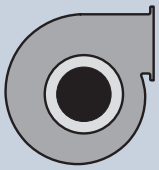

Centrifugal fans	Weight centrifugal fans kg	Centrifugal blowers with flange	Weight centrifugal blowers kg
R1G 085-AB05 -01	0.5	**G1G 085-AB05 -01**	0.8
R1G 085-AB07 -01	0.5	**G1G 085-AB07 -01**	0.8

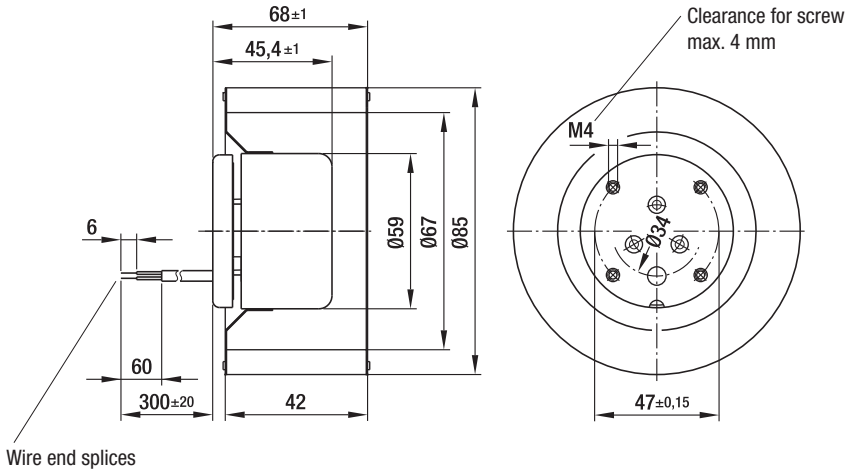

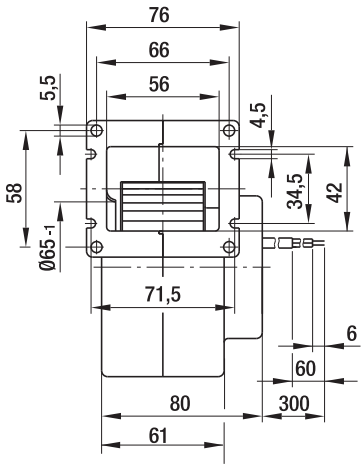

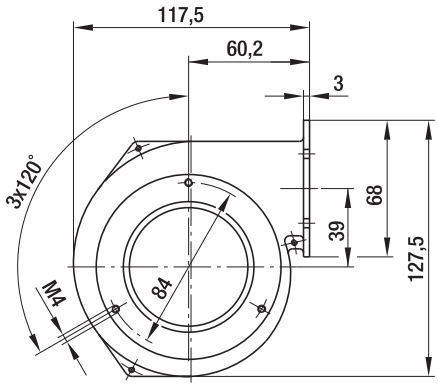

Max. 95 m³/h

DC centrifugal fans and blowers

Ø 97 mm

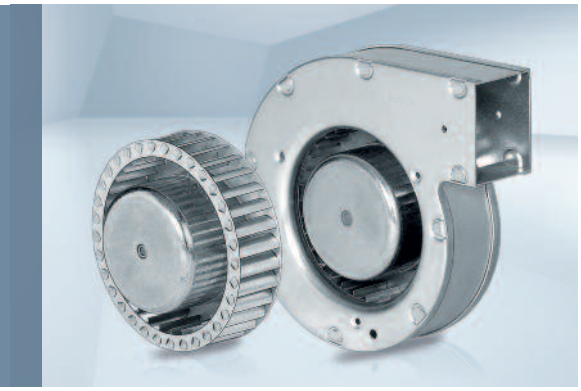

- **Material:** Housing: Hot-dip galvanized sheet steel
  Impeller: Hot-dip galvanized sheet steel
  Rotor: Galvanized
- **Direction of rotation:** Clockwise, looking towards rotor
- **Degree of protection:** IP 22
- **Insulation class:** "B"
- **Installation position:** Any
- **Condensation drainage holes:** None
- **Mode of operation:** Continuous operation (S1)
- **Bearings:** Maintenance-free ball bearings

Nominal data		Curve	Nominal voltage	Nominal voltage range	Air flow	Nominal speed	Power consumption	Input current	Sound pressure level	Min. back-pressure	Admissible amb. temp.	Technical features and connection diagram
Type	**Motor**		**VDC**	**VDC**	**m³/h**	**rpm⁻¹**	**W**	**A**	**dB(A)**	**Pa**	**°C**	
***1G 097**	M1G 045-BE	A	24	16-28	95	2650	16	0.75	59	0	-25...+60	p. 259 / G)
***1G 097**	M1G 045-BE	A	48	36-57	95	2650	16	0.38	59	0	-25...+60	p. 259 / G)

Subject to change

Curves:

U_N = nominal voltage (24 V /48 V)

U_R = over-voltage (28 V / 57 V)

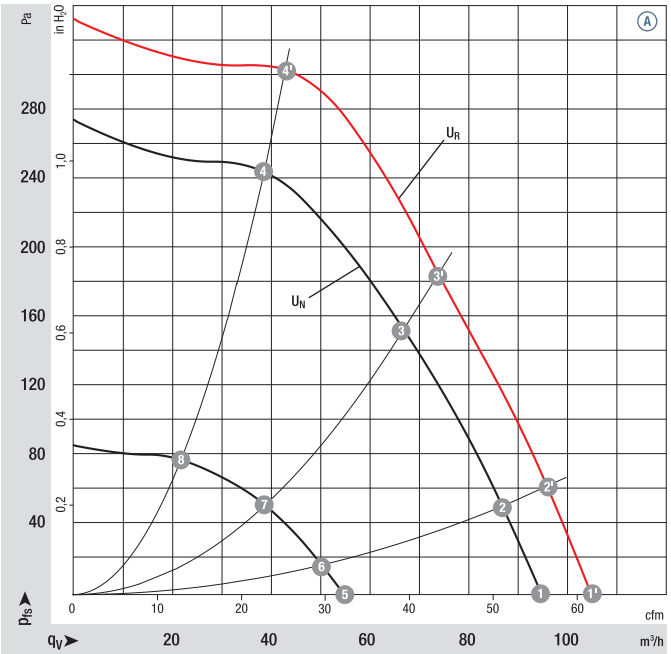

	n rpm⁻¹	P_{ed} W	Lp_A dB(A)	η_{tL} %
A 1'	2920	22	62	—
A 2'	3030	21	61	41
A 3'	3300	17	59	48
A 4'	3700	13	58	48
A 1	2650	16	59	—
A 2	2730	15	58	41
A 3	2960	13	56	48
A 4	3290	10	55	48
A 5	1615	4	45	—
A 6	1650	4	45	38
A 7	1745	4	43	46
A 8	1880	3	42	47

Air performance measured according to: ISO 5801, Installation category A, with ebm-papst scroll housing without contact protection. Suction-side noise levels: L_WA according to ISO 13347, L_pA measured at 1 m distance from fan axis. The values given are applicable only under the specified measuring conditions and may differ depending on the installation conditions. In the event of deviation from the standard configuration, the parameters must be checked after installation! For detailed information see http://www.ebmpapst.com/general conditions

ebmpapst

- **Technical features:** See connection diagram p. 259
- **Cable exit:** Axial
- **Conformity with standard(s):** EN 60950-1
- **Approvals:** EAC

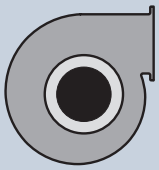

Centrifugal fans	Weight centrifugal fans kg	Centrifugal blowers with flange	Weight centrifugal blowers kg
R1G 097-AA05 -01	0.5	**G1G 097-AA05 -01**	0.8
R1G 097-AA07 -01	0.5	**G1G 097-AA07 -01**	0.8

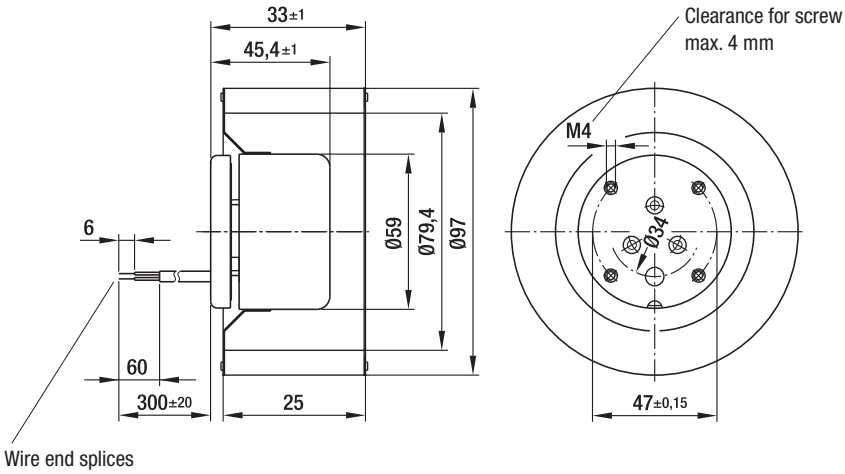

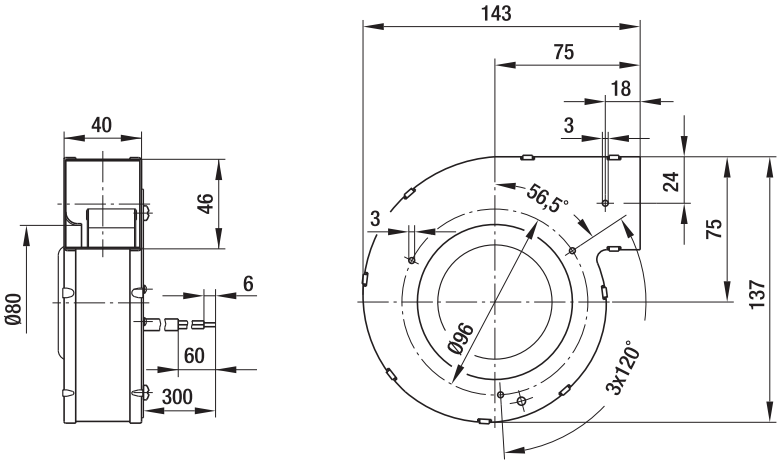

Max. 200 m³/h

DC centrifugal fans and blowers

Ø 108 mm

- **Material:** Housing: Die-cast aluminum
  Impeller: Hot-dip galvanized sheet steel
  Rotor: Painted black
- **Direction of rotation:** Clockwise, looking towards rotor
- **Degree of protection:** IP 22
- **Insulation class:** "B"
- **Installation position:** Any
- **Condensation drainage holes:** None
- **Mode of operation:** Continuous operation (S1)
- **Bearings:** Maintenance-free ball bearings

Nominal data		Curve	Nominal voltage	Nominal voltage range	Air flow	Nominal speed	Power consumption	Input current	Sound pressure level	Min. back-pressure	Admissible amb. temp.	Technical features and connection diagram
Type	**Motor**		**VDC**	**VDC**	**m³/h**	**rpm⁻¹**	**W**	**A**	**dB(A)**	**Pa**	**°C**	
***1G 108**	M1G 055-BD	A	24	16-28	200	3000	42	2.00	65	0	-25...+60	p. 259 / G)
***1G 108**	M1G 055-BD	A	48	36-57	200	3000	42	1.00	65	0	-25...+60	p. 259 / G)

Subject to change

Curves:

U_N = nominal voltage (24 V /48 V)

U_R = over-voltage (28 V / 57 V)

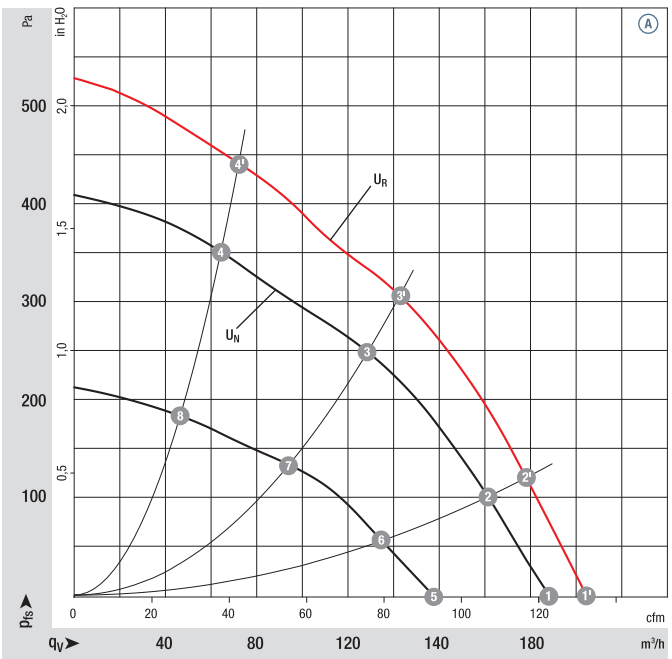

	n rpm⁻¹	P_{ed} W	Lp_A dB(A)	η_{tL} %
A 1'	3230	55	67	—
A 2'	3410	52	66	33
A 3'	3800	43	65	41
A 4'	4100	35	64	33
A 1	3000	42	65	—
A 2	3140	40	64	33
A 3	3420	32	63	41
A 4	3690	26	63	33
A 5	2300	20	61	—
A 6	2380	17	58	33
A 7	2550	14	55	41
A 8	2720	11	55	33

Air performance measured according to: ISO 5801, Installation category A, with ebm-papst scroll housing without contact protection. Suction-side noise levels: L_WA according to ISO 13347, L_pA measured at 1 m distance from fan axis. The values given are applicable only under the specified measuring conditions and may differ depending on the installation conditions. In the event of deviation from the standard configuration, the parameters must be checked after installation! For detailed information see http://www.ebmpapst.com/general conditions

ebmpapst

- **Technical features:** See connection diagram p. 259
- **Cable exit:** Axial
- **Protection class:** I
- **Conformity with standard(s):** EN 60950-1
- **Approvals:** Ⓐ (24 VDC) UL, CSA, Ⓐ (48 VDC) CCC

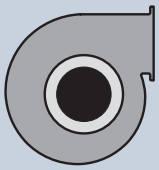

Centrifugal fans	Weight centrifugal fans kg	Centrifugal blowers with flange	Weight centrifugal blowers kg
R1G 108-AB17 -02	0.7	**G1G 108-AB17 -02**	1.4
R1G 108-AB41 -02	0.7	**G1G 108-AB41 -02**	1.4

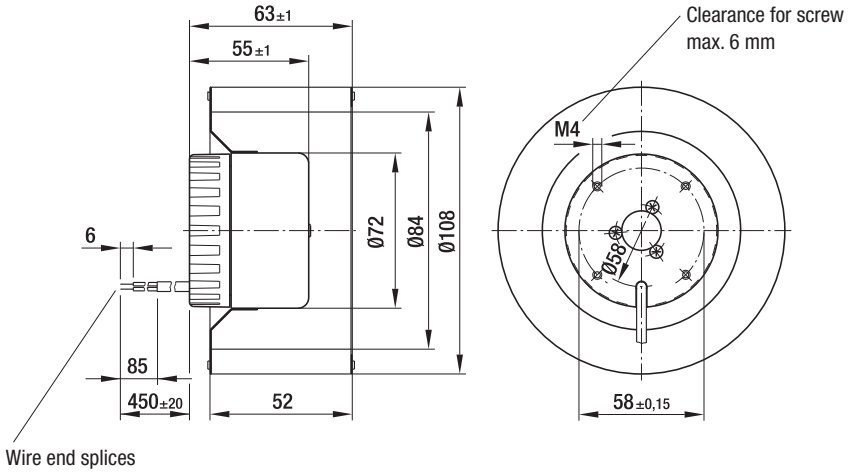

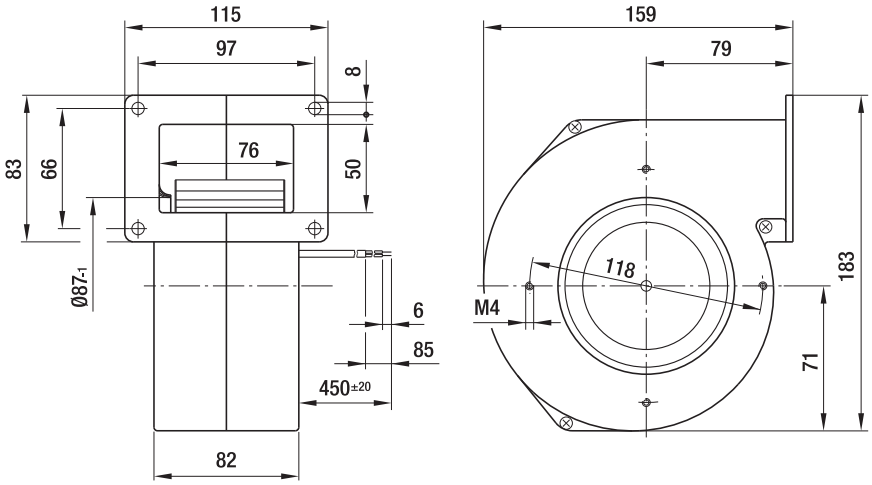

Max. 255 m³/h

DC centrifugal fans and blowers

Ø 120 mm

- **Material:** Housing: Die-cast aluminum
  Impeller: Hot-dip galvanized sheet steel
  Rotor: Galvanized
- **Direction of rotation:** Clockwise, looking towards rotor
- **Degree of protection:** IP 22
- **Insulation class:** "B"
- **Installation position:** Any
- **Condensation drainage holes:** None
- **Mode of operation:** Continuous operation (S1)
- **Bearings:** Maintenance-free ball bearings

Nominal data		Curve	Nominal voltage	Nominal voltage range	Air flow	Nominal speed	Power consumption	Input current	Sound pressure level	Min. back-pressure	Admissible amb. temp.	Technical features and connection diagram
Type	**Motor**		**VDC**	**VDC**	**m³/h**	**rpm⁻¹**	**W**	**A**	**dB(A)**	**Pa**	**°C**	
***1G 120**	M1G 055-BD	A	24	16-28	255	2200	40	1.90	62	0	-25...+60	p. 259 / G)
***1G 120**	M1G 055-BD	A	48	36-57	255	2200	40	0.95	62	0	-25...+60	p. 259 / G)

Subject to change

Curves:

U_N = nominal voltage (24 V /48 V)

U_R = over-voltage (28 V / 57 V)

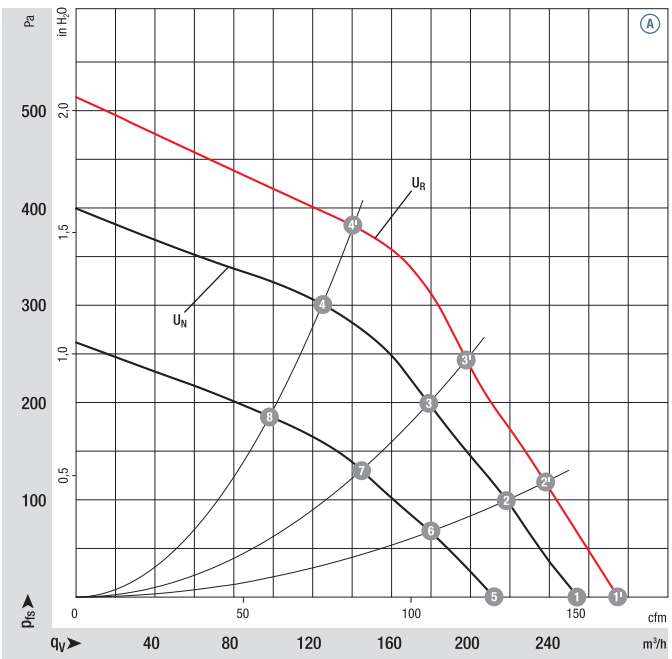

	n rpm⁻¹	P_{ed} W	Lp_A dB(A)	η_{tL} %
A 1'	2410	50	63	—
A 2'	2620	47	62	58
A 3'	2870	44	61	60
A 4'	3200	36	62	55
A 1	2200	40	62	—
A 2	2410	36	60	59
A 3	2600	32	58	62
A 4	2880	25	58	55
A 5	1870	24	55	—
A 6	1990	21	54	58
A 7	2100	18	53	61
A 8	2310	14	54	54

Air performance measured according to: ISO 5801, Installation category A, with ebm-papst scroll housing without contact protection. Suction-side noise levels: L_WA according to ISO 13347, L_pA measured at 1 m distance from fan axis. The values given are applicable only under the specified measuring conditions and may differ depending on the installation conditions. In the event of deviation from the standard configuration, the parameters must be checked after installation! For detailed information see http://www.ebmpapst.com/general conditions

ebmpapst

- **Technical features:** See connection diagram p. 259
- **Cable exit:** Axial
- **Protection class:** I
- **Conformity with standard(s):** EN 60950-1
- **Approvals:** Ⓐ (24 VDC) UL, CSA, Ⓐ (48 VDC) CCC

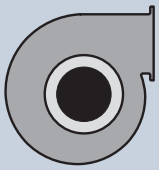

Centrifugal fans	Weight centrifugal fans kg	Centrifugal blowers with flange	Weight centrifugal blowers kg
R1G 120-AB67 -02	0.8	**G1G 120-AB67 -02**	1.6
R1G 120-AB71 -02	0.8	**G1G 120-AB71 -02**	1.6

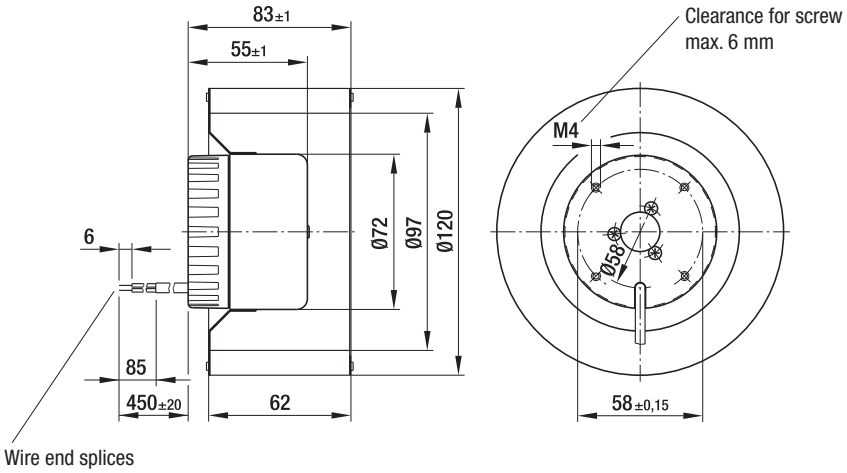

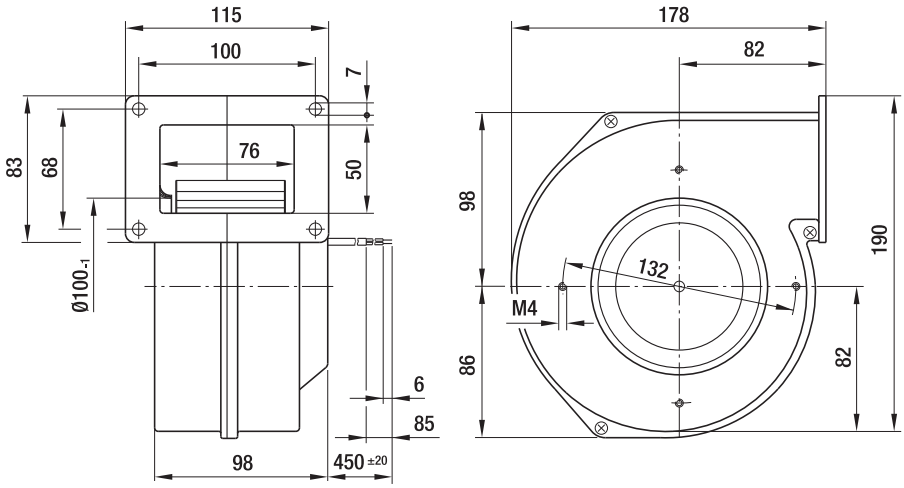

Max. 225 m³/h

DC centrifugal fans and blowers

Ø 133 mm

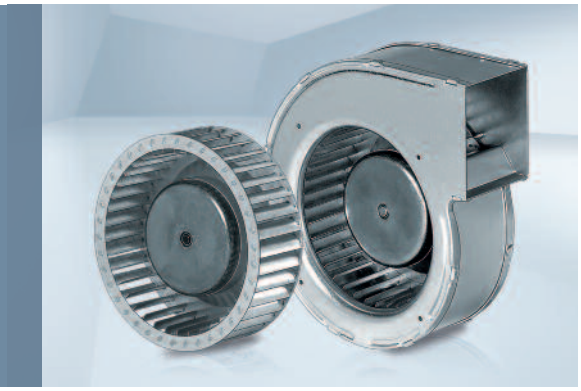

- **Material:** Housing: Hot-dip galvanized sheet steel
  Impeller: Hot-dip galvanized sheet steel
  Rotor: Galvanized
- **Direction of rotation:** Clockwise, looking towards rotor
- **Degree of protection:** IP 22
- **Insulation class:** "B"
- **Installation position:** Any
- **Condensation drainage holes:** None
- **Mode of operation:** Continuous operation (S1)
- **Bearings:** Maintenance-free ball bearings

Nominal data		Curve	Nominal voltage	Nominal voltage range	Air flow	Nominal speed	Power consumption	Input current	Sound pressure level	Min. back-pressure	Admissible amb. temp.	Technical features and connection diagram
Type	**Motor**		**VDC**	**VDC**	**m³/h**	**rpm⁻¹**	**W**	**A**	**dB(A)**	**Pa**	**°C**	
***1G 133**	M1G 055-BD	A	24	16-28	225	2000	40	2.20	64	0	-25...+60	p. 259 / G)
***1G 133**	M1G 055-BD	A	48	36-57	225	2000	40	1.10	64	0	-25...+60	p. 259 / G)

Subject to change

Curves:

U_N = nominal voltage (24 V /48 V)

U_R = over-voltage (28 V / 57 V)

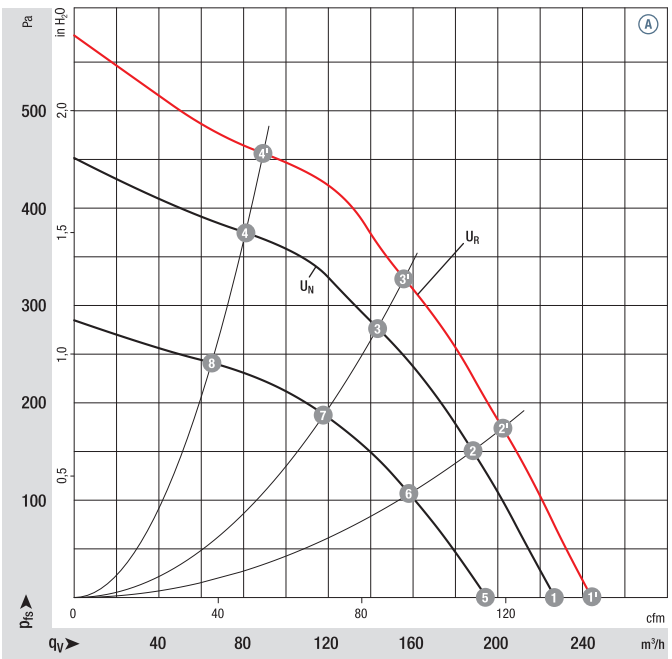

		n rpm⁻¹	P_{ed} W	Lp_A dB(A)	η_{tL} %
A	1'	2170	57	66	—
A	2'	2410	51	66	47
A	3'	2750	44	64	49
A	4'	3200	36	66	32
A	1	2000	45	64	—
A	2	2230	40	64	49
A	3	2540	35	62	51
A	4	2920	27	63	33
A	5	1750	28	60	—
A	6	1910	24	59	50
A	7	2120	20	58	53
A	8	2370	15	59	35

Air performance measured according to: ISO 5801, Installation category A, with ebm-papst scroll housing without contact protection. Suction-side noise levels: L_WA according to ISO 13347, L_pA measured at 1 m distance from fan axis. The values given are applicable only under the specified measuring conditions and may differ depending on the installation conditions. In the event of deviation from the standard configuration, the parameters must be checked after installation! For detailed information see http://www.ebmpapst.com/general conditions

ebmpapst

- **Technical features:** See connection diagram p. 259
- **Cable exit:** Lateral
- **Protection class:** I
- **Conformity with standard(s):** EN 60950-1
- **Approvals:** Ⓐ (24 VDC) UL, CSA, Ⓐ (48 VDC) CCC

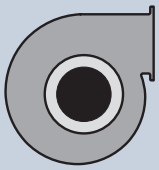

Centrifugal fans	Weight centrifugal fans kg	Centrifugal blowers with flange	Weight centrifugal blowers kg
R1G 133-AE19 -02	0.7	**G1G 133-DE19 -02**	1.3
R1G 133-AE03 -02	0.7	**G1G 133-DE03 -02**	1.3

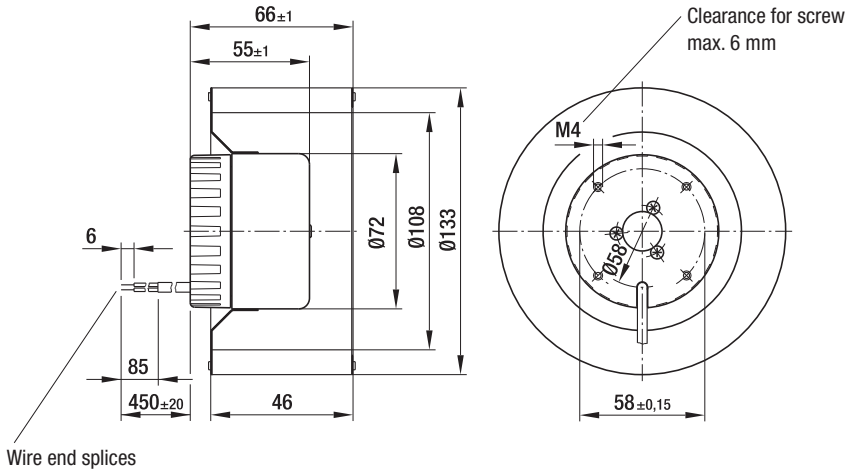

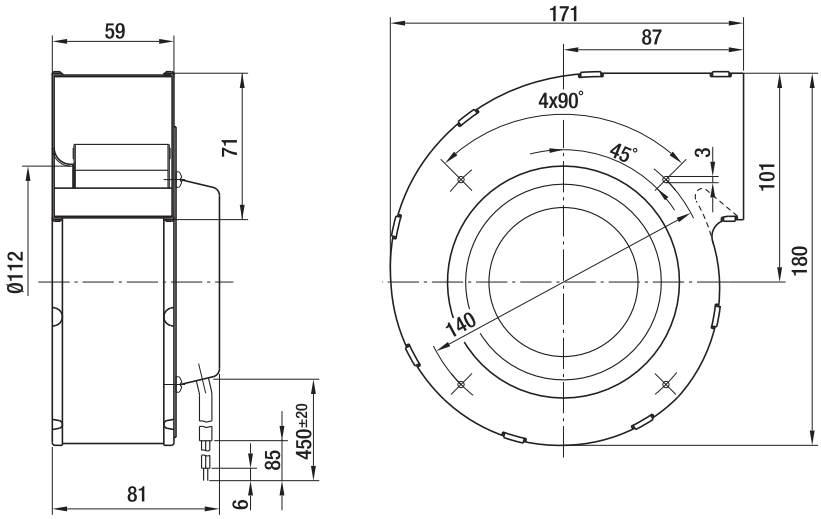

Max. 410 m³/h

DC centrifugal fans and blowers

Ø 140 mm

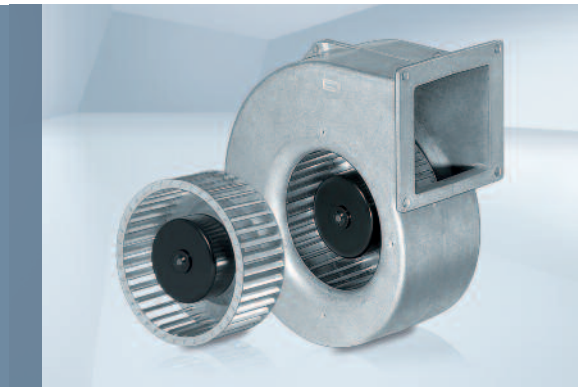

- **Material:** Housing: Die-cast aluminum
  Impeller: Hot-dip galvanized sheet steel
  Rotor: Painted black
- **Direction of rotation:** Clockwise, looking towards rotor
- **Degree of protection:** IP 22
- **Insulation class:** "B"
- **Installation position:** Any
- **Condensation drainage holes:** None
- **Mode of operation:** Continuous operation (S1)
- **Bearings:** Maintenance-free ball bearings

Nominal data		Curve	Nominal voltage	Nominal voltage range	Air flow	Nominal speed	Power consumption	Input current	Sound pressure level	Min. back-pressure	Admissible amb. temp.	Technical features and connection diagram
Type	**Motor**		**VDC**	**VDC**	**m³/h**	**rpm⁻¹**	**W**	**A**	**dB(A)**	**Pa**	**°C**	
***1G 140**	M1G 055-BD	A	24	16-28	400	1750	54	2.50	63	0	-25...+60	p. 259 / G)
***1G 140**	M1G 055-BD	A	48	36-57	410	1750	54	1.30	63	0	-25...+60	p. 259 / G)

Subject to change

Curves:

U_N = nominal voltage (24 V /48 V)

U_R = over-voltage (28 V / 57 V)

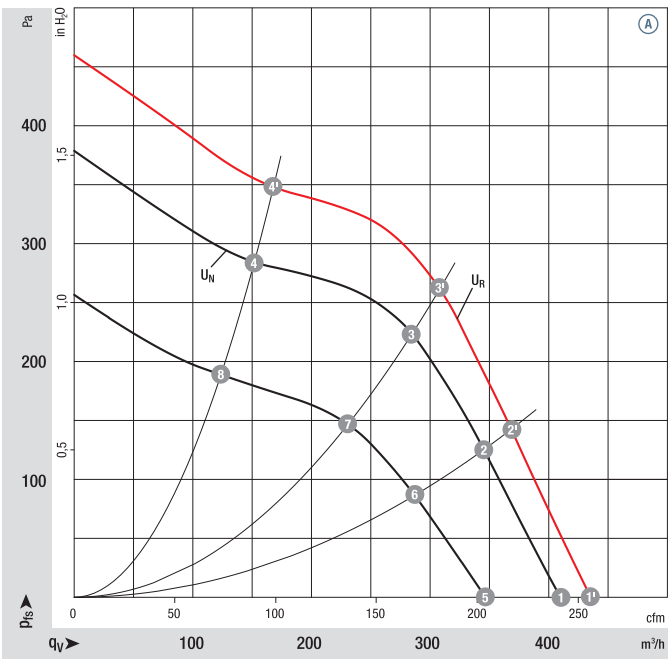

		n rpm⁻¹	P_{ed} W	Lp_A dB(A)	η_{tL} %
A	1'	1850	65	64	—
A	2'	2020	61	61	50
A	3'	2200	57	59	54
A	4'	2550	43	60	40
A	1	1750	54	63	—
A	2	1900	50	59	51
A	3	2030	45	58	54
A	4	2310	32	58	40
A	5	1500	34	60	—
A	6	1580	29	56	50
A	7	1670	25	54	53
A	8	1880	19	53	41

Air performance measured according to: ISO 5801, Installation category A, with ebm-papst scroll housing without contact protection. Suction-side noise levels: L_WA according to ISO 13347, L_pA measured at 1 m distance from fan axis. The values given are applicable only under the specified measuring conditions and may differ depending on the installation conditions. In the event of deviation from the standard configuration, the parameters must be checked after installation! For detailed information see http://www.ebmpapst.com/general conditions

ebmpapst

- **Technical features:** See connection diagram p. 259
- **Cable exit:** Axial
- **Protection class:** I
- **Conformity with standard(s):** EN 60950-1
- **Approvals:** Ⓐ (48 VDC) CCC

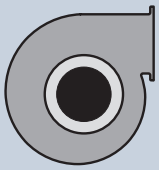

Centrifugal fans	Weight centrifugal fans kg	Centrifugal blowers with flange	Weight centrifugal blowers kg
R1G 140-AV17 -02	1.0	**G1G 140-AV17 -02**	2.3
R1G 140-AV21 -02	1.0	**G1G 140-AV21 -02**	2.3

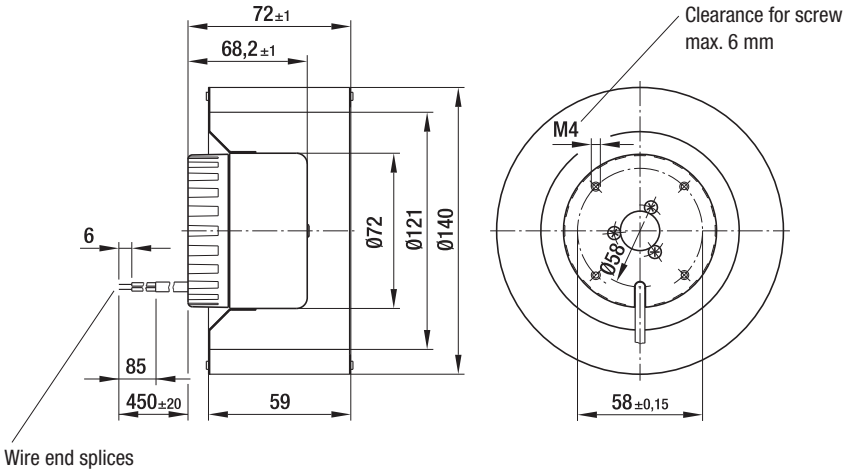

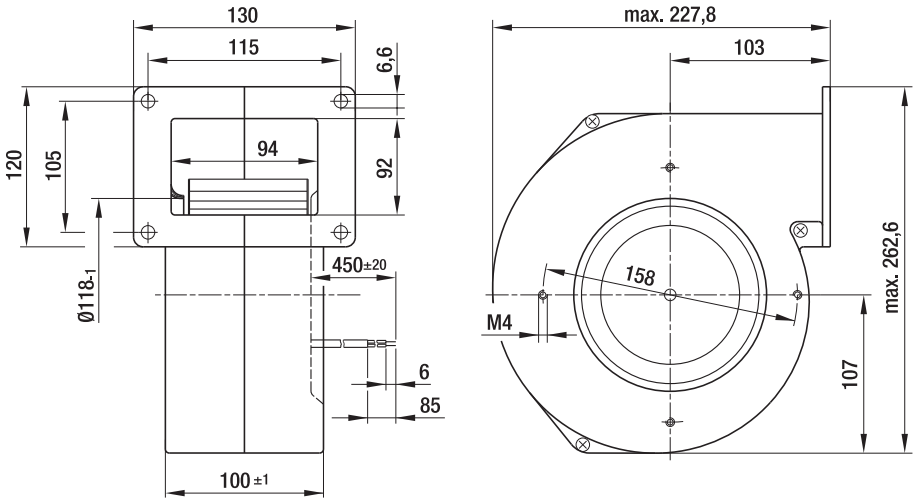

Max. 470 m³/h

DC centrifugal fans and blowers

Ø 146 mm

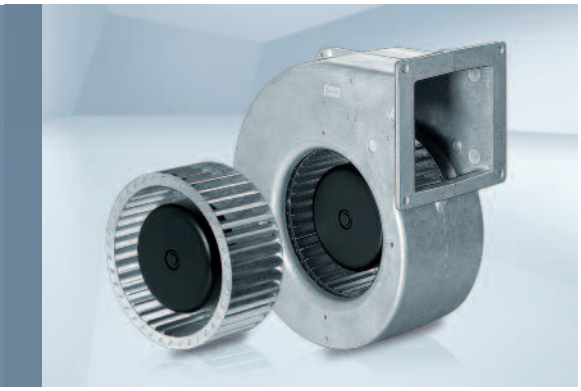

- **Material:** Housing: Die-cast aluminum
  Impeller: Hot-dip galvanized sheet steel
  Rotor: Painted black
- **Direction of rotation:** Clockwise, looking towards rotor
- **Degree of protection:** IP 42
- **Insulation class:** "B"
- **Installation position:** Any
- **Condensation drainage holes:** None
- **Mode of operation:** Continuous operation (S1)
- **Bearings:** Maintenance-free ball bearings

Nominal data		Curve	Nominal voltage	Nominal voltage range	Air flow	Nominal speed	Power consumption	Input current	Sound pressure level	Min. back-pressure	Admissible amb. temp.	Technical features and connection diagram
Type	**Motor**		**VDC**	**VDC**	**m³/h**	**rpm⁻¹**	**W**	**A**	**dB(A)**	**Pa**	**°C**	
***1G 146**	M1G 074-BF	A	24	16-28	470	2200	100	5.00	68	0	-25...+60	p. 259 / G)
***1G 146**	M1G 074-BF	A	48	36-57	465	2150	100	2.60	67	0	-25...+60	p. 259 / G)

Subject to change

Curves:

U_N = nominal voltage (24 V /48 V)

U_R = over-voltage (28 V / 57 V)

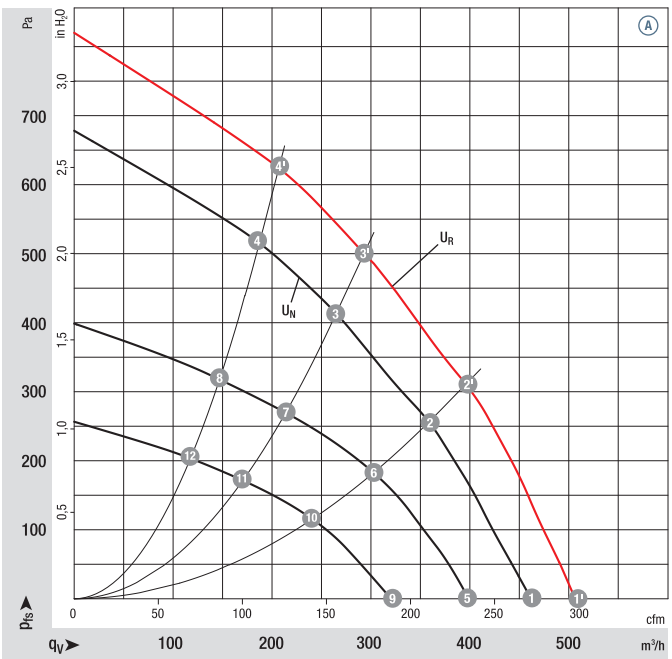

		n rpm⁻¹	P_{ed} W	Lp_A dB(A)	η_{tL} %
A	1'	2400	140	70	—
A	2'	2650	130	67	45
A	3'	3000	110	66	49
A	4'	3300	100	67	45
A	1	2200	100	68	—
A	2	2445	90	65	46
A	3	2750	84	64	49
A	4	3025	77	65	45
A	5	1890	68	63	—
A	6	2075	57	60	46
A	7	2250	48	61	49
A	8	2335	41	61	45
A	9	1520	37	59	—
A	10	1670	32	55	46
A	11	1815	27	55	49
A	12	1920	23	55	45

Air performance measured according to: ISO 5801, Installation category A, with ebm-papst scroll housing without contact protection. Suction-side noise levels: L_WA according to ISO 13347, L_pA measured at 1 m distance from fan axis. The values given are applicable only under the specified measuring conditions and may differ depending on the installation conditions. In the event of deviation from the standard configuration, the parameters must be checked after installation! For detailed information see http://www.ebmpapst.com/general conditions

ebmpapst

- **Technical features:** See connection diagram p. 259
- **Cable exit:** Axial
- **Protection class:** I
- **Conformity with standard(s):** EN 60950-1
- **Approvals:** UL, CSA, CCC (only centrifugal blowers)

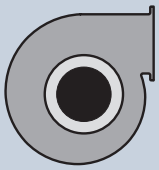

Centrifugal fans	Weight centrifugal fans kg	Centrifugal blowers with flange	Weight centrifugal blowers kg
R1G 146-AA07 -52	1.4	**G1G 146-BA07 -52**	2.8
R1G 146-AA11 -52	1.4	**G1G 146-BA11 -52**	2.8

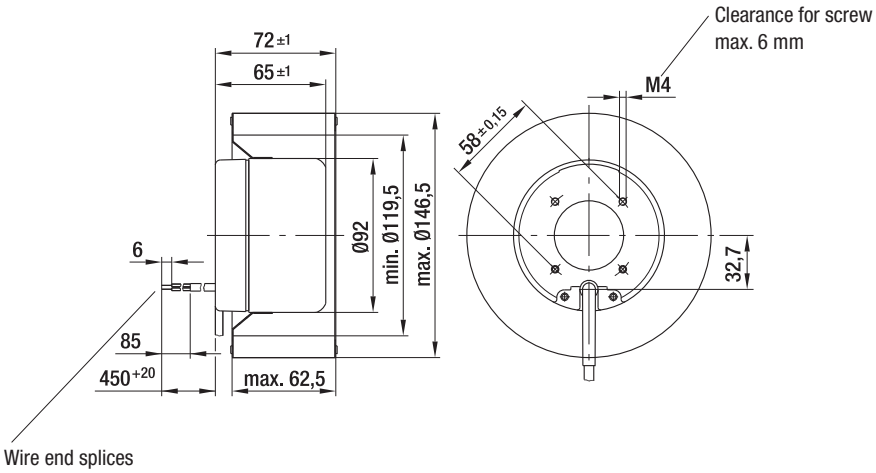

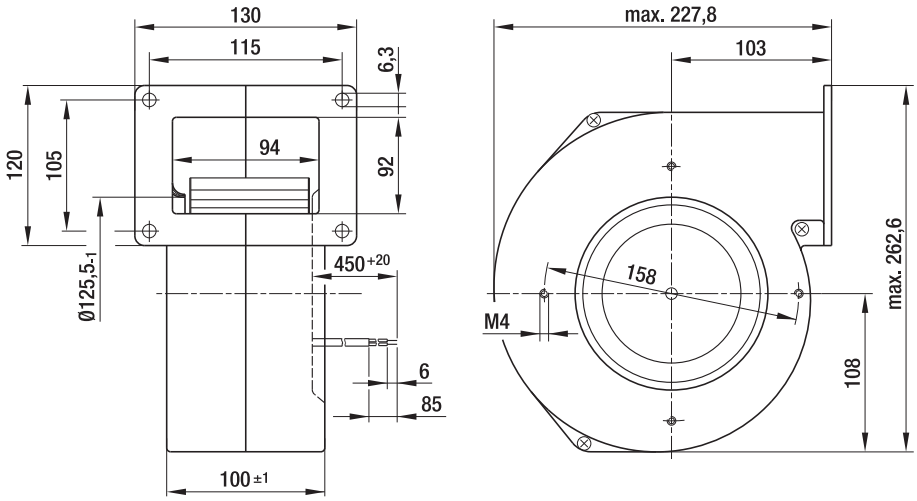

Max. 505 m³/h

DC centrifugal fans and blowers

Ø 160 mm

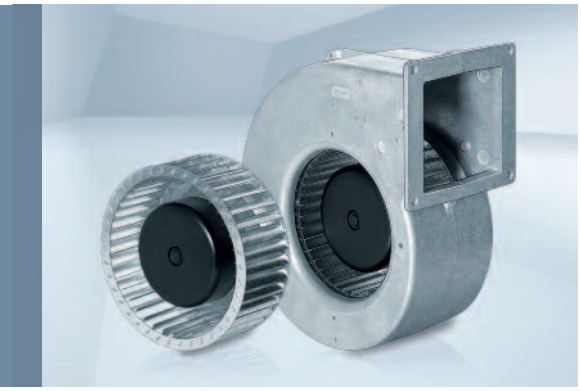

- **Material:** Housing: Die-cast aluminum
  Impeller: Hot-dip galvanized sheet steel
  Rotor: Painted black
- **Direction of rotation:** Clockwise, looking towards rotor
- **Degree of protection:** IP 42
- **Insulation class:** "B"
- **Installation position:** Any
- **Condensation drainage holes:** None
- **Mode of operation:** Continuous operation (S1)
- **Bearings:** Maintenance-free ball bearings

Nominal data		Curve	Nominal voltage	Nominal voltage range	Air flow	Nominal speed	Power consumption	Input current	Sound pressure level	Min. back-pressure	Admissible amb. temp.	Technical features and connection diagram
Type	**Motor**		**VDC**	**VDC**	**m³/h**	**rpm⁻¹**	**W**	**A**	**dB(A)**	**Pa**	**°C**	
***1G 160**	M1G 074-BF	Ⓐ	24	16-28	505	1750	105	5.80	67	0	-25...+60	p. 259 / G)
***1G 160**	M1G 074-BF	Ⓐ	48	36-57	505	1750	105	2.90	67	0	-25...+60	p. 259 / G)

Subject to change

Curves:

U_N = nominal voltage (24 V /48 V)

U_R = over-voltage (28 V / 57 V)

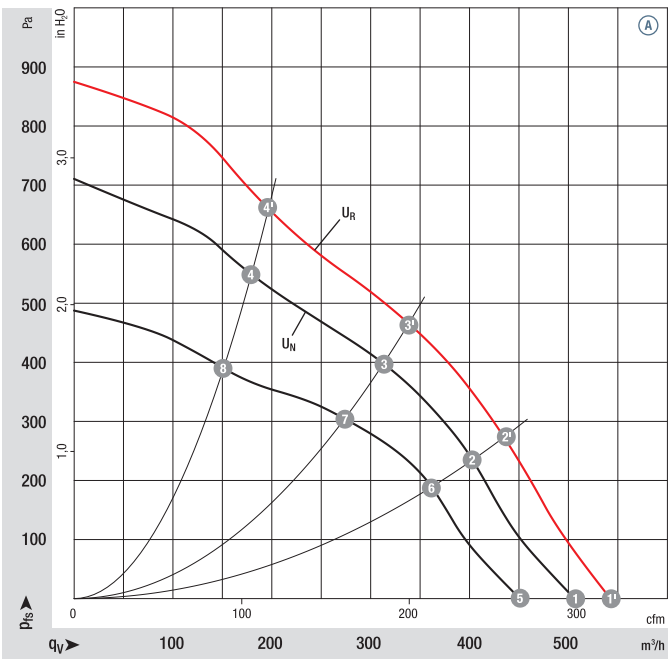

		n rpm⁻¹	P_{ed} W	Lp_A dB(A)	η_{tL} %
Ⓐ	1'	1890	134	68	—
Ⓐ	2'	2200	118	67	52
Ⓐ	3'	2500	110	67	57
Ⓐ	4'	2900	102	69	52
Ⓐ	1	1750	105	67	—
Ⓐ	2	2030	95	66	52
Ⓐ	3	2270	90	65	57
Ⓐ	4	2550	81	67	44
Ⓐ	5	1580	72	62	—
Ⓐ	6	1810	66	62	52
Ⓐ	7	2000	58	62	57
Ⓐ	8	2200	48	63	54

Air performance measured according to: ISO 5801, Installation category A, with ebm-papst scroll housing without contact protection. Suction-side noise levels: L_WA according to ISO 13347, L_pA measured at 1 m distance from fan axis. The values given are applicable only under the specified measuring conditions and may differ depending on the installation conditions. In the event of deviation from the standard configuration, the parameters must be checked after installation! For detailed information see http://www.ebmpapst.com/general conditions

ebmpapst

- **Technical features:** See connection diagram p. 259
- **Cable exit:** Axial
- **Protection class:** I
- **Conformity with standard(s):** EN 60950-1
- **Approvals:** UL, CSA

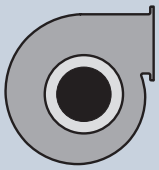

Centrifugal fans	Weight centrifugal fans kg	Centrifugal blowers with flange	Weight centrifugal blowers kg
R1G 160-AH29 -52	1.4	**G1G 160-BH29 -52**	2.8
R1G 160-AH39 -52	1.4	**G1G 160-BH39 -52**	2.8

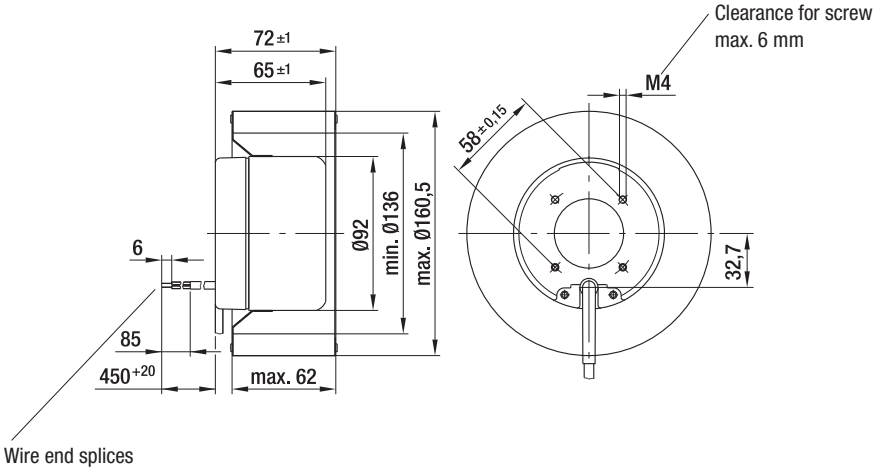

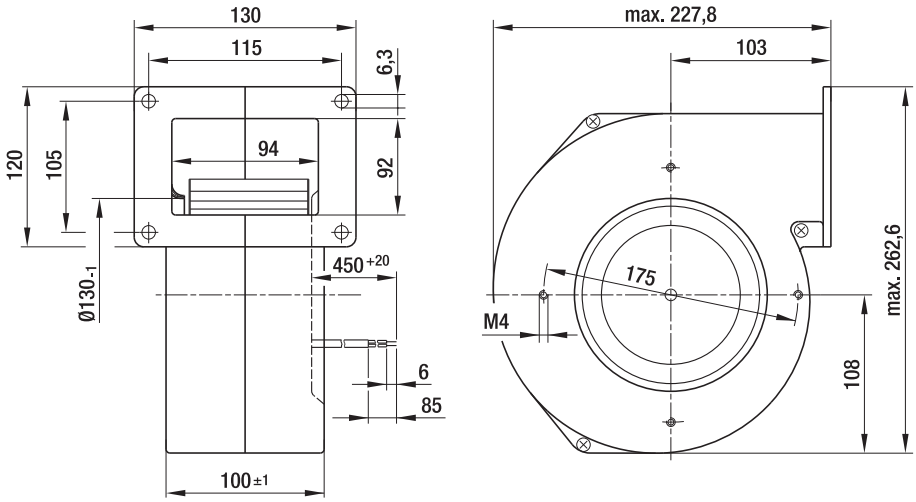

Max. 700 m³/h

DC centrifugal blowers

Ø 133 mm

- **Material:** Housing: Galvanized sheet steel
  Impeller: Galvanized sheet steel
  Rotor: Painted black
- **Direction of rotation:** Clockwise, looking towards rotor
- **Degree of protection:** IP 42
- **Insulation class:** "B"
- **Installation position:** Any
- **Condensation drainage holes:** None
- **Mode of operation:** Continuous operation (S1)
- **Design:** SAL motor mounted with vibration damping on both sides
- **Bearings:** Maintenance-free ball bearings

Nominal data

Type	Motor	Curve	Nominal voltage	Nominal voltage range	Air flow	Nominal speed	Power consumption	Input current	Sound pressure level	Min. back-pressure	Admissible amb. temp.	Technical features and connection diagram
			VDC	VDC	m³/h	rpm⁻¹	W	A	dB(A)	Pa	°C	
D1G 133	M1G 074-BF	A	24	16-28	700	1780	105	5.60	62	50	-25...+60	p. 259 / G)
D1G 133	M1G 074-BF	A	48	36-57	700	1780	105	2.80	62	50	-25...+60	p. 259 / G)

Subject to change

Curves:

U_N = nominal voltage (24 V /48 V)

U_R = over-voltage (28 V / 57 V)

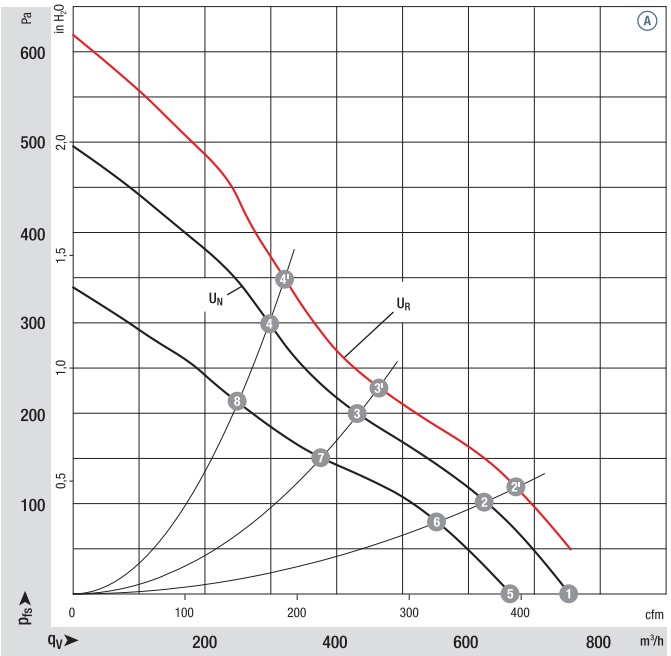

	n rpm⁻¹	P_{ed} W	Lp_A dB(A)	η_{tL} %
A 1'	—	—	—	—
A 2'	2050	121	63	49
A 3'	2490	106	62	41
A 4'	2820	100	62	37
A 1	1780	105	62	—
A 2	1900	97	61	49
A 3	2310	86	59	41
A 4	2630	80	60	37
A 5	1500	73	59	—
A 6	1720	67	57	49
A 7	2020	58	56	41
A 8	2230	49	56	37

Air performance measured according to: ISO 5801, Installation category A, with ebm-papst scroll housing without contact protection. Suction-side noise levels: L_WA according to ISO 13347, L_pA measured at 1 m distance from fan axis. The values given are applicable only under the specified measuring conditions and may differ depending on the installation conditions. In the event of deviation from the standard configuration, the parameters must be checked after installation! For detailed information see http://www.ebmpapst.com/general conditions

ebmpapst

- **Technical features:** See connection diagram p. 259
- **Cable exit:** Variable
- **Protection class:** I
- **Conformity with standard(s):** EN 60950-1
- **Approvals:** UL, CSA; Ⓐ (48 VDC) also CCC

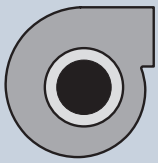

Centrifugal blowers without flange	Weight centrifugal blowers kg
D1G 133-AB29 -52	3.3
D1G 133-AB39 -52	3.3

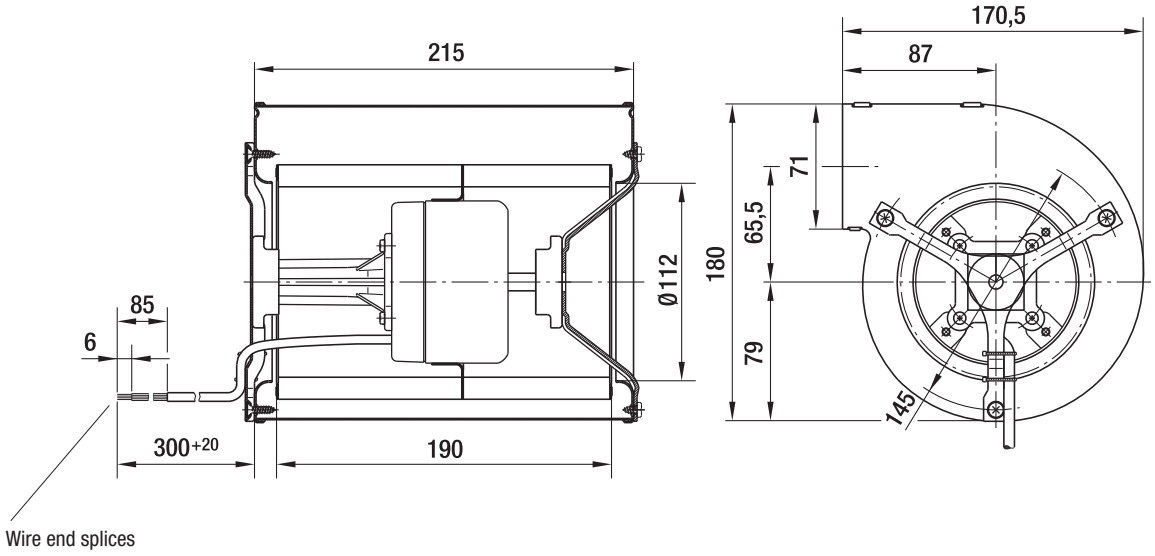

Max. 1020 m³/h

DC centrifugal blowers

Ø 133 mm

- **Material:** Housing: Galvanized sheet steel
  Impeller: Galvanized sheet steel
  Rotor: Painted black
- **Direction of rotation:** Clockwise, looking towards rotor
- **Degree of protection:** IP 42
- **Insulation class:** "B"
- **Installation position:** Any
- **Condensation drainage holes:** None
- **Mode of operation:** Continuous operation (S1)
- **Design:** SAL motor mounted with vibration damping on both sides
- **Bearings:** Maintenance-free ball bearings

Nominal data

Type	Motor	Curve	Nominal voltage	Nominal voltage range	Air flow	Nominal speed	Power consumption	Input current	Sound pressure level	Min. back-pressure	Admissible amb. temp.	Technical features and connection diagram
			VDC	VDC	m³/h	rpm⁻¹	W	A	dB(A)	Pa	°C	
D1G 133	M1G 074-BF	A	24	16-28	1020	1580	118	6.00	64	0	-25...+60	p. 259 / G)
D1G 133	M1G 074-BF	A	48	36-57	1020	1580	118	3.00	64	0	-25...+60	p. 259 / G)

Subject to change

Curves:

U_N = nominal voltage (24 V /48 V)

U_R = over-voltage (28 V / 57 V)

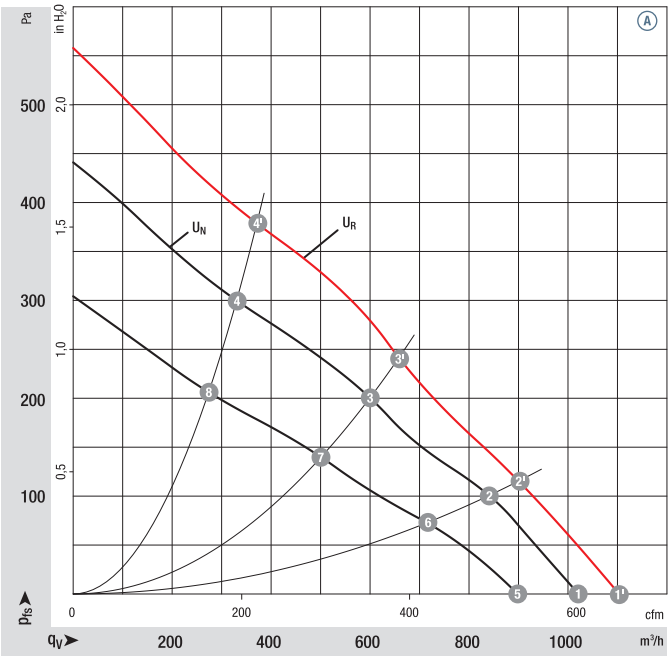

	n rpm⁻¹	P_{ed} W	Lp_A dB(A)	η_{tL} %
A 1'	1700	145	65	—
A 2'	1930	133	62	38
A 3'	2290	122	59	41
A 4'	2700	99	61	32
A 1	1580	118	64	—
A 2	1790	107	61	38
A 3	2100	95	57	41
A 4	2410	73	58	32
A 5	1400	78	60	—
A 6	1580	70	56	38
A 7	1760	56	53	41
A 8	2000	44	53	32

Air performance measured according to: ISO 5801, Installation category A, with ebm-papst scroll housing without contact protection. Suction-side noise levels: L_WA according to ISO 13347, L_pA measured at 1 m distance from fan axis. The values given are applicable only under the specified measuring conditions and may differ depending on the installation conditions. In the event of deviation from the standard configuration, the parameters must be checked after installation! For detailed information see http://www.ebmpapst.com/general conditions

ebmpapst

- **Technical features:** See connection diagram p. 259
- **EMC (24 VDC):** Interference emission acc. to EN 55022, class B
  Immunity to interference acc. to EN 61000-6-2
- **Cable exit:** Variable
- **Protection class:** I
- **Conformity with standard(s):** EN 60950-1
- **Approvals:** UL, CSA

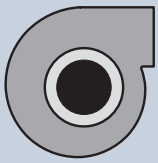

Centrifugal blowers without flange	Weight centrifugal blowers kg
D1G 133-DC13 -52	3.4
D1G 133-DC17 -52	3.4

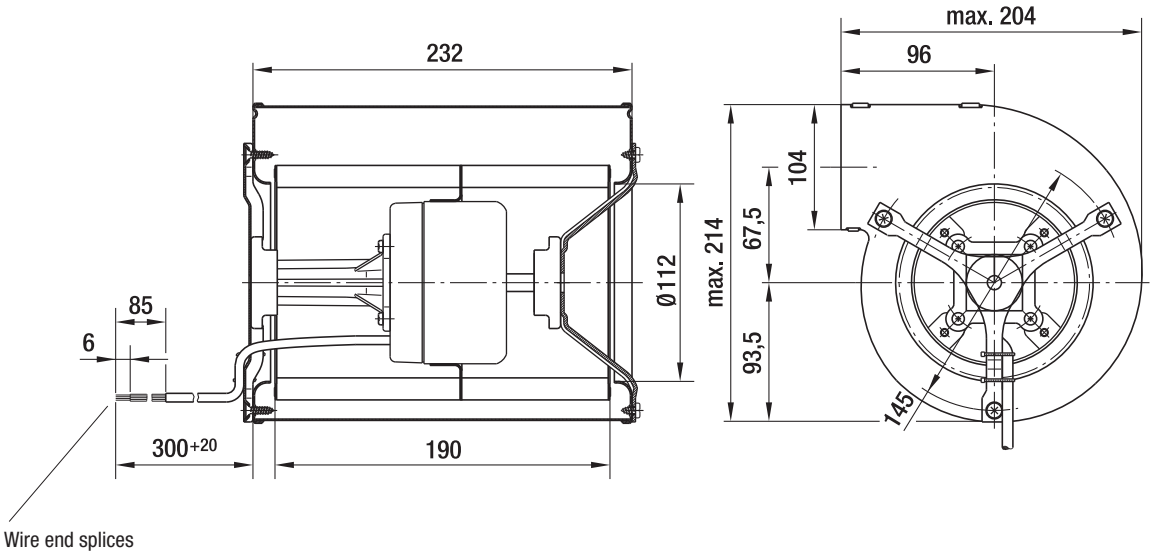

Max. 1000 m³/h

DC centrifugal blowers

Ø 146 mm

- **Material:** Housing: Galvanized sheet steel
  Impeller: Galvanized sheet steel
  Rotor: Painted black
- **Direction of rotation:** Clockwise, looking towards rotor
- **Degree of protection:** IP 42
- **Insulation class:** "B"
- **Installation position:** Any
- **Condensation drainage holes:** None
- **Mode of operation:** Continuous operation (S1)
- **Design:** SAL motor mounted with vibration damping on both sides
- **Bearings:** Maintenance-free ball bearings

Nominal data		Curve	Nominal voltage	Nominal voltage range	Air flow	Nominal speed	Power consumption	Input current	Sound pressure level	Min. back-pressure	Admissible amb. temp.	Technical features and connection diagram
Type	**Motor**		**VDC**	**VDC**	**m³/h**	**rpm⁻¹**	**W**	**A**	**dB(A)**	**Pa**	**°C**	
D1G 146	M1G 074-CF	A	24	16-28	1000	1350	105	5.10	61	0	-25...+60	p. 259 / G)
D1G 146	M1G 074-CF	A	48	36-57	1000	1350	105	2.60	61	0	-25...+60	p. 259 / G)

Subject to change

Curves:

U_N = nominal voltage (24 V /48 V)

U_R = over-voltage (28 V / 57 V)

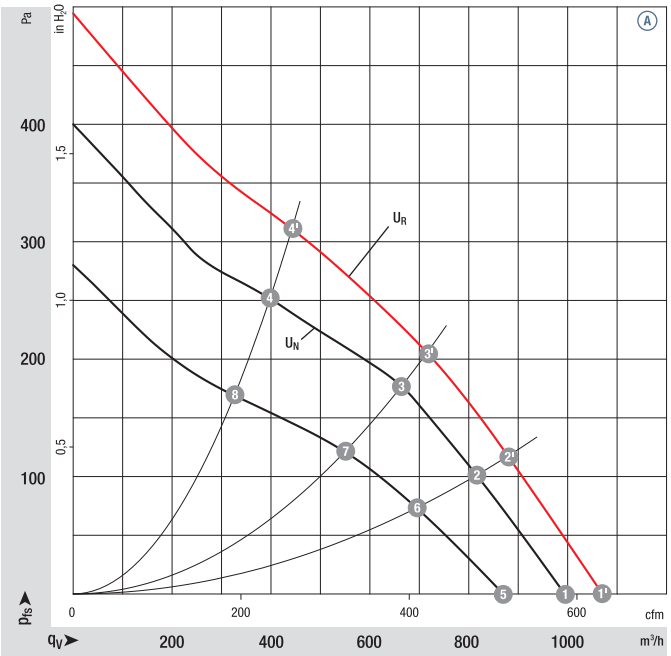

	n rpm⁻¹	P_{ed} W	Lp_A dB(A)	η_{tL} %
A 1'	1460	129	63	—
A 2'	1680	119	60	53
A 3'	1890	111	58	61
A 4'	2240	95	59	55
A 1	1350	105	61	—
A 2	1570	95	58	53
A 3	1750	88	56	61
A 4	2010	70	57	55
A 5	1210	70	56	—
A 6	1360	60	54	53
A 7	1460	53	52	61
A 8	1670	42	51	55

Air performance measured according to: ISO 5801, Installation category A, with ebm-papst scroll housing without contact protection. Suction-side noise levels: L_WA according to ISO 13347, L_pA measured at 1 m distance from fan axis. The values given are applicable only under the specified measuring conditions and may differ depending on the installation conditions. In the event of deviation from the standard configuration, the parameters must be checked after installation! For detailed information see http://www.ebmpapst.com/general conditions

ebmpapst

- **Technical features:** See connection diagram p. 259
- **EMC (24 VDC):** Interference emission acc. to EN 55022, class B
  Immunity to interference acc. to EN 61000-6-2
- **Cable exit:** Variable
- **Protection class:** I
- **Conformity with standard(s):** EN 60950-1
- **Approvals:** UL, CSA

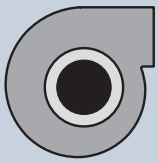

Centrifugal blowers without flange	Weight centrifugal blowers kg
D1G 146-AA19 -52	3.5
D1G 146-AA33 -52	3.5

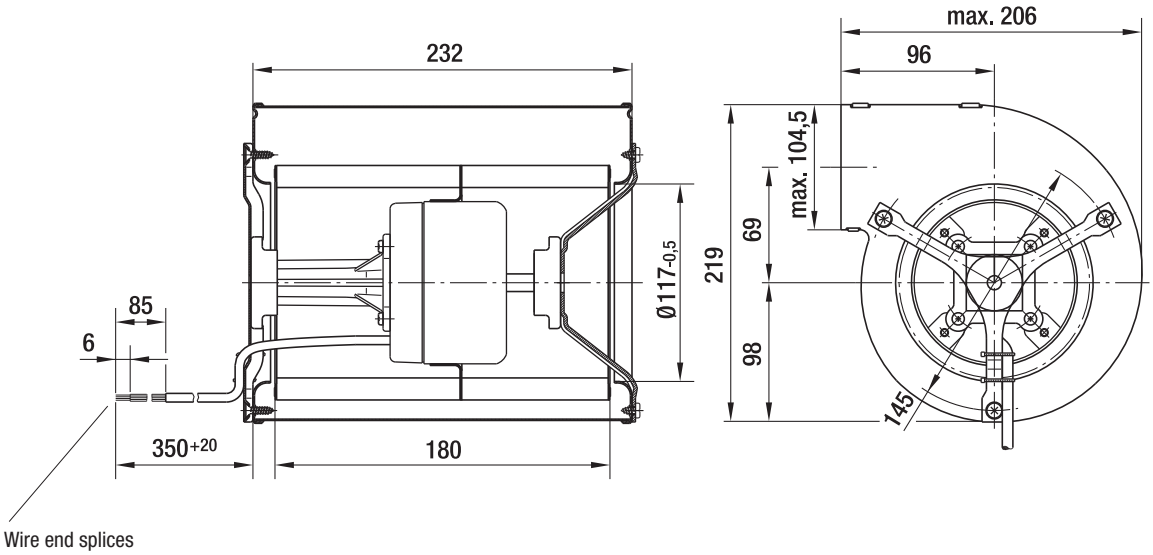

Max. 980 m³/h

DC centrifugal blowers

Ø 160 mm

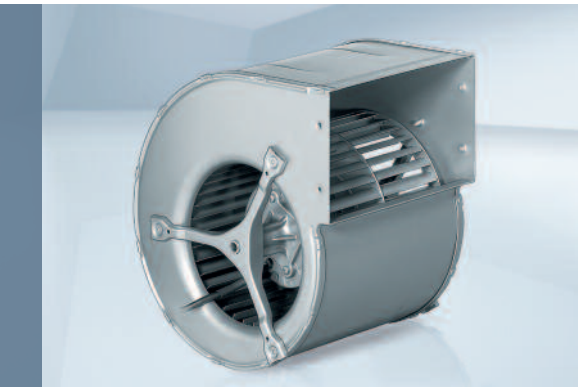

- **Material:** Housing: Galvanized sheet steel
  Impeller: Galvanized sheet steel
  Rotor: Painted black
- **Direction of rotation:** Counterclockwise, looking towards rotor
- **Degree of protection:** IP 42
- **Insulation class:** "B"
- **Installation position:** Any
- **Condensation drainage holes:** None
- **Mode of operation:** Continuous operation (S1)
- **Design:** SAL motor mounted with vibration damping on both sides
- **Bearings:** Maintenance-free ball bearings

Nominal data

Type	Motor	Curve	Nominal voltage VDC	Nominal voltage range VDC	Air flow m³/h	Nominal speed rpm⁻¹	Power consumption W	Input current A	Sound pressure level dB(A)	Min. back-pressure Pa	Admissible amb. temp. °C	Technical features and connection diagram
D1G 160	M1G 074-CF	A	24	16-28	980	1250	112	5.60	60	0	-25...+60	p. 259 / G)
D1G 160	M1G 074-CF	A	48	36-57	980	1250	112	2.90	60	0	-25...+60	p. 259 / G)

Subject to change

Curves:

U_N = nominal voltage (24 V /48 V)

U_R = over-voltage (28 V / 57 V)

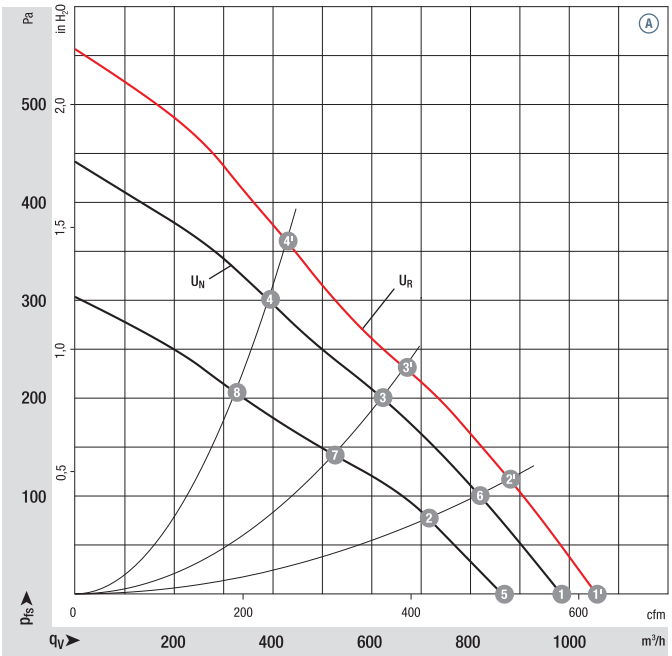

	n rpm⁻¹	P_{ed} W	Lp_A dB(A)	η_{tL} %
A 1'	1330	142	63	—
A 2'	1520	128	61	64
A 3'	1790	115	59	66
A 4'	2090	105	60	60
A 1	1250	112	60	—
A 2	1420	102	59	64
A 3	1660	92	58	66
A 4	1900	80	58	60
A 5	1100	75	58	—
A 6	1250	69	56	64
A 7	1420	58	54	66
A 8	1580	47	53	60

Air performance measured according to: ISO 5801, Installation category A, with ebm-papst scroll housing without contact protection. Suction-side noise levels: L_WA according to ISO 13347, L_pA measured at 1 m distance from fan axis. The values given are applicable only under the specified measuring conditions and may differ depending on the installation conditions. In the event of deviation from the standard configuration, the parameters must be checked after installation! For detailed information see http://www.ebmpapst.com/general conditions

ebmpapst

- **Technical features:** See connection diagram p. 259
- **Cable exit:** Variable
- **Protection class:** I
- **Conformity with standard(s):** EN 60950-1
- **Approvals:** UL, CSA

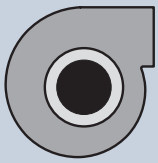

Centrifugal blowers without flange	Weight centrifugal blowers kg
D1G 160-DA19 -52	3.6
D1G 160-DA33 -52	3.6

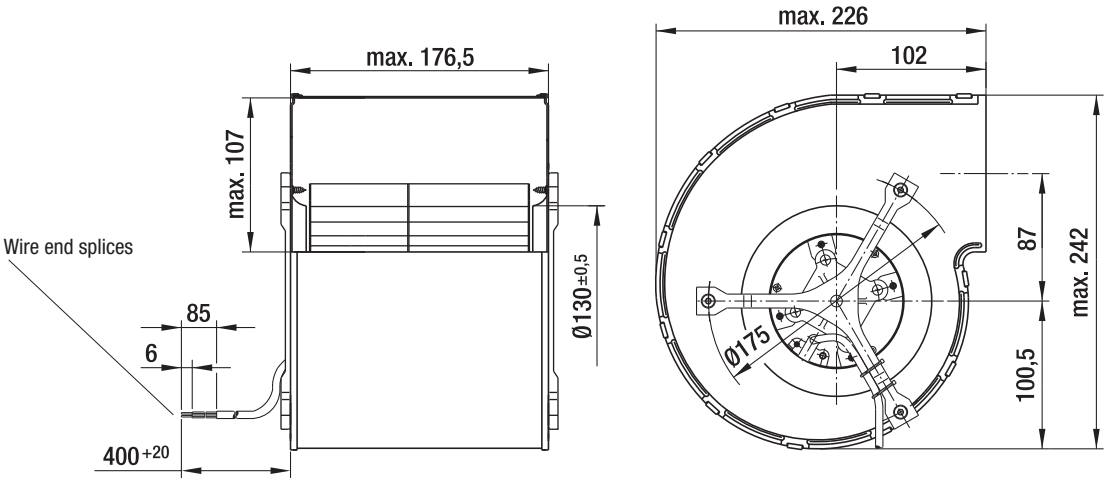

DC fans - specials

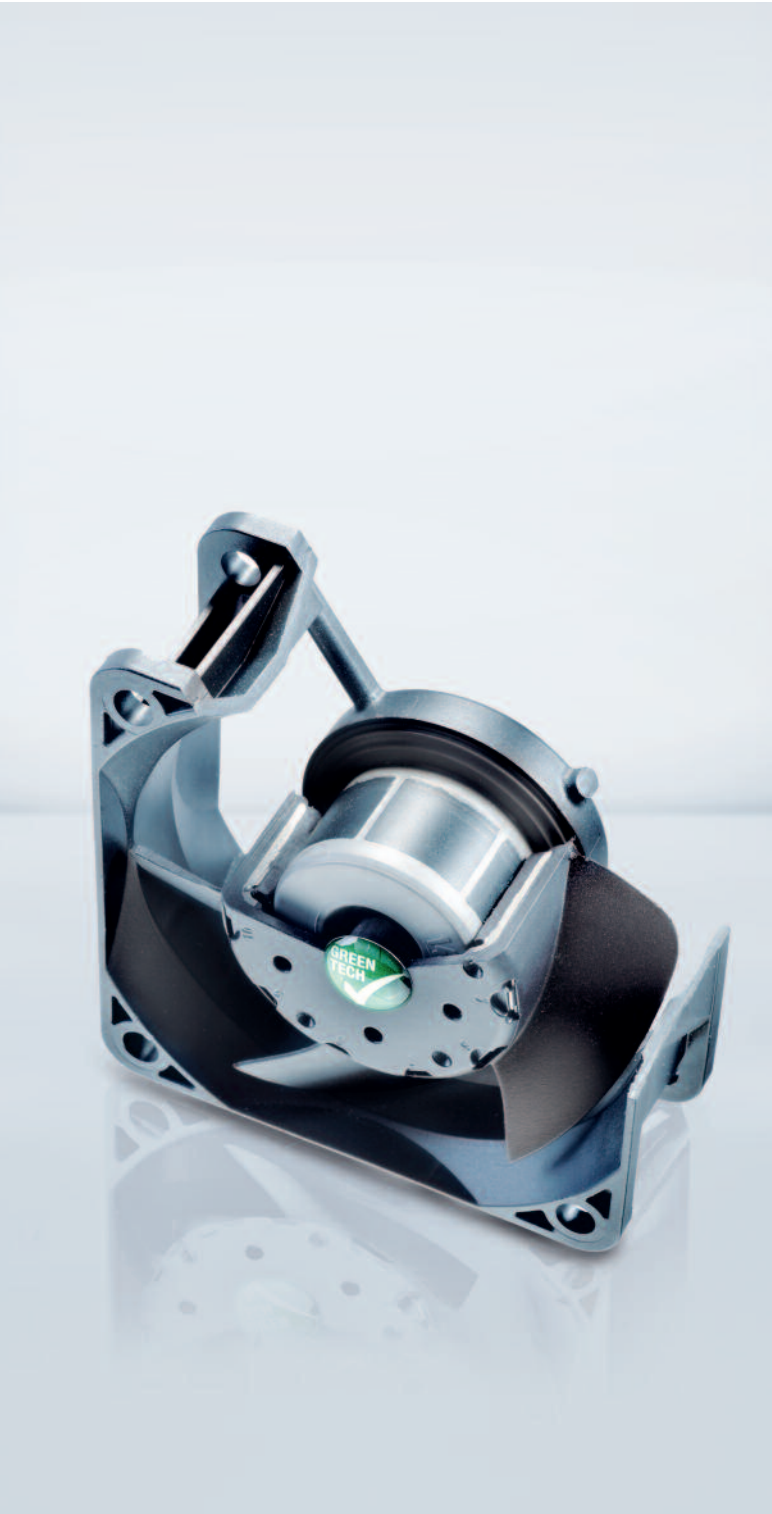

DC fans - specials

Technical information

Cooling capacity and efficiency
Greater power density, increasing miniaturization and extreme electronic component density are placing increased demands on the cooling capacity and efficiency of fans. Therefore, intelligent and space-saving integration of the fan in the device configuration is very important:

- Tailor-made cooling adapted to the situation as and when required.
- Programmable cooling by defining speed profiles.
- Transparency of function thanks to complete, interactive monitoring in all operating conditions.

Standard fans in electronics cooling have proven themselves a million times over.

With a constant speed and an appropriate sound level, they continuously provide the air flow required for extreme cases. But these extreme situations occur seldom – if at all – during operation. What is needed is an intelligent fan that adapts automatically to the level of cooling required at the time.

ebm-papst provides intelligent cooling concepts that are optimally adapted to practical requirements. For example:

1. Speed adjustment via temperature sensor
ebm-papst answers with a complete range of DC fans with temperature-controlled speed adjustment via a temperature sensor, available in a variety of standard dimensions.

Installation is very simple. Either an external temperature sensor in the form of an exposed wire that can be placed anywhere, or an internal sensor located directly in the fan hub in the air flow provides continuous and undissipated thermal information to the control electronics for speed adjustment. A range of temperature sensors can be found on page 178.

2. DC fans with separate control input
Open or closed-loop speed control is also possible with DC fans that have a separate control input. So a control voltage or a pulse-width modulated signal can be used to vary the speed. These options are used primarily in devices that have the appropriate standard interfaces and require varied fans depending on the load.

DC fans - specials

Technical information



3. Speed signal
DC fans with speed signal.
The integrated "electronic tachometer" continuously provides an actual speed signal for external evaluation. A very simple signal evaluation on the customer side informs the user of the current fan speed at all times. The speed signal is provided by a separate wire.

4. Alarm signal
For applications that require monitored fan operation with an alarm signal, ebm-papst offers a number of alarm signals variants. Depending on the type of fan in question, the signal will either be static, already evaluated, or a continuous, interface-compatible, high or low signal. The alarm signal is provided by a separate wire.

5. Turbo drives
Fans with three-phase EC drives and microprocessor-controlled motor electronics. The torque of these three-phase motors, which is virtually independent of the rotor position, allows the fan to run very smoothly. The speed of these fans can be controlled over a very wide speed range by means of PWM, analog voltage, or temperature. Optionally, the fans can be supplied with reversible direction of rotation and active brake operation.

6. Vario-Pro fans
This high-end fan concept by ebm-papst with programmed intelligence and customer-specific integrated functions makes your electronics cooling even more versatile and competitive. Vario-Pro provides greater economy for all demanding cooling tasks – especially those that require greater safety, more flexibility, and intelligent features like an alarm function, speed control, etc.

The key to the success of Vario-Pro is: Tailor-made software instead of permanently installed hardware, because software modules programmed for motor control and application intelligence do the work that used to be performed by analog components in the past. This central control unit of the Vario-Pro comprises a microcontroller and an EEPROM, where all its features are stored.

7. Protection against environmental conditions
Some applications place particular demands on the fans' resistance to environmental conditions, such as dust, moisture, water, and salt. ebm-papst offers solutions for adapting fans to these conditions.

Speed signal /2

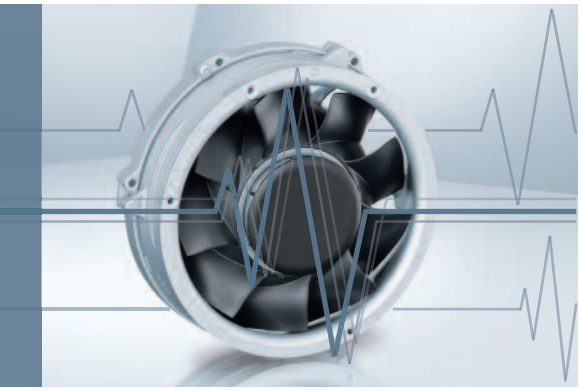

- Speed-proportional, square-wave signal for external monitoring of the fan motor speed
- 2, 3, or 6 pulses per revolution
- Open-collector signal output
- Extremely wide operating voltage range
- Easy adaptation to user interface
- Connection via separate cable
- The sensor signal also serves as a major comparison variable for setting and maintaining the setpoint speed for interactive or controlled cooling with one or more interconnected fans.

Electrical hookup

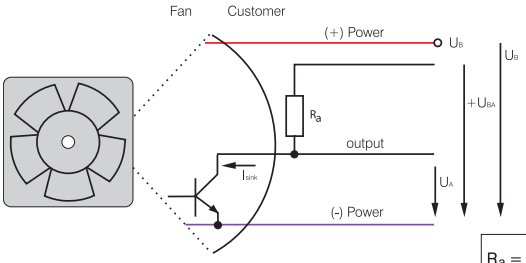

$$R_a = \frac{U_{BS} - U_{SLow}}{I_{SINK}}$$

All voltages measured to ground.
External load resistor R_a / U_S / U_{BS} required.

Signal output voltage
Standard signal for all models (exceptions see below)

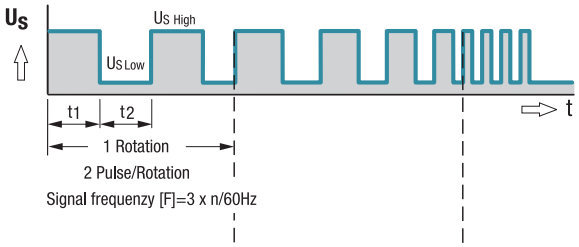

For multi options control input and 4100 NH7 and NH8

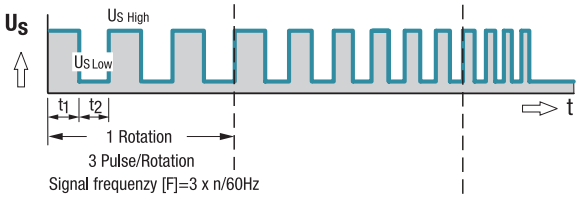

All TD Fans e.g. 6300 TD

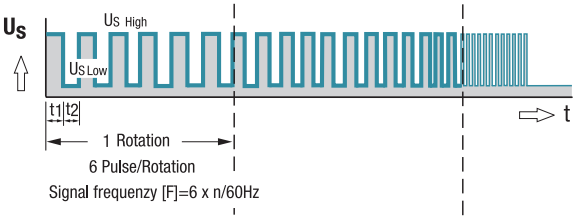

Fan speed

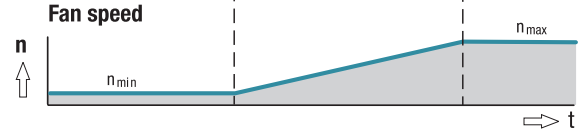

Signal data	Speed signal $U_{S\,Low}$	Condition: I_{sink}	Speed signal $U_{S\,High}$	Condition: I_{source}	Tach operating voltage $U_{BS\,max.}$	Admissible sink current $I_{sink\,max.}$	Pulses per revolution	Fan description Basic type
Type	**VDC**	**mA**	**VDC**	**mA**	**VDC**	**mA**		**Page**
250	≤ 0.4	2	≤ 30	0	30	2	2	31
400 F	≤ 0.4	1	≤ 30	0	30	2	2	32
400	≤ 0.4	1	≤ 30	0	30	2	2	33
420 J	≤ 0.4	2	≤ 15	0	15	4	2	34
500 F	≤ 0.4	1	≤ 30	0	30	2	2	35
600 F	≤ 0.4	1	≤ 30	0	30	2	2	36
620	≤ 0.4	2	≤ 30	0	30	4	2	37
630 U	≤ 0.4	2	≤ 30	0	30	4	2	38
600 N	≤ 0.4	2	≤ 28	0	28	4	2	39
600 J	≤ 0.4	2	≤ 30	0	30	4	2	41
700 F	≤ 0.4	2	≤ 30	0	30	4	2	42
8450	≤ 0.4	2	≤ 28	0	28	4	2	43
8400 N	≤ 0.4	2	≤ 28	0	28	4	2	44
8400 N VARIOFAN	≤ 0.4	2	≤ 30	0	30	4	2	45
8300	≤ 0.4	2	≤ 30	0	30	4	2	46
8200 J	≤ 0.4	2	≤ 30	0	30	4	2	47
3400 N	≤ 0.4	2	≤ 28	0	28	4	2	48
3400 N VARIOFAN	≤ 0.4	2	≤ 30	0	30	4	2	49
3300 N	≤ 0.4	2	≤ 30	0	30	4	2	50
3212 J / 3214 J	≤ 0.4	2	≤ 30	0	30	4	2	51
3218 J	≤ 0.4	2	≤ 60	0	60	4	2	51
3250 J	≤ 0.4	2	≤ 60	0	60	4	3	52
4412 F / 4414 F	≤ 0.4	2	≤ 30	0	30	4	2	53
4418 F	≤ 0.4	2	≤ 60	0	60	4	2	53
4400 FN	≤ 0.4	2	≤ 30	0	30	4	2	55
4312 / 4314	≤ 0.4	2	≤ 30	0	30	4	2	56
4318	≤ 0.4	2	≤ 60	0	60	4	2	56
4312 / 4314 VARIOFAN	≤ 0.4	2	≤ 30	0	30	4	2	57
4318 VARIOFAN	≤ 0.4	2	≤ 60	0	60	4	2	57
4400	≤ 0.4	2	≤ 30	0	30	4	2	58/59
4100 N	≤ 0.4	2	≤ 30	0	30	4	2	60
4100 NHH...NH6	≤ 0.4	2	≤ 60	0	60	10	2	61
4100 NH7...NH8	≤ 0.4	2	≤ 60	0	60	20	3	62
DV 4100	≤ 0.4	2	≤ 30	0	30	4	2	63
5200 N	≤ 0.4	2	≤ 30	0	30	4	2	64
DV 5200	≤ 0.4	2	≤ 30	0	30	4	2	65

Subject to change

ebmpapst

Available on request:
- Electrically isolated speed signal circuit
- Varying voltage potentials for power and logic circuit

Signal data	Speed signal $U_{S\ Low}$	Condition: I_{sink}	Speed signal $U_{S\ High}$	Condition: I_{source}	Tach operating voltage $U_{BS\ max.}$	Admissible sink current $I_{sink\ max.}$	Pulses per revolution	Fan description Basic type
Type	**VDC**	**mA**	**VDC**	**mA**	**VDC**	**mA**		**Page**
5112 N	≤ 0.4	2	≤ 15	0	5	20	2	66
5114 N / 5118 N	≤ 0.4	2	≤ 60	0	60	20	2	66
5300	≤ 0.4	2	≤ 60	0	60	4	2	67
5300 TD	≤ 0.4	2	≤ 60	0	60	20	6	68
7112 N / 7118 N	≤ 0.4	2	≤ 60	0	60	20	2	69
7114 N	≤ 0.4	2	≤ 30	0	30	20	2	69
7200 N	≤ 0.4	2	≤ 15	0	15	20	2	70
6400	≤ 0.4	2	≤ 60	0	60	20	2	71
6300 TD	≤ 0.4	2	≤ 60	0	60	20	6	75
6300 N	≤ 0.4	2	≤ 60	0	60	20	6	76
6300 NTD	≤ 0.4	2	≤ 60	0	60	20	6	77
6300	≤ 0.4	2	≤ 60	0	60	20	2	78
DV 6300 TD	≤ 0.4	2	≤ 60	0	60	20	6	80
2200 FTD	≤ 0.4	2	≤ 60	0	60	20	6	81
RL 48	≤ 0.4	2	≤ 30	0	30	4	2	97
RL 65	≤ 0.4	2	≤ 30	0	30	4	2	98
RL 90 N	≤ 0.4	2	≤ 30	0	30	4	2	99
RLF 100	≤ 0.4	2	≤ 30	0	30	4	2	100
RG 90 N	≤ 0.4	2	≤ 30	0	30	4	2	101
RG 125 N	≤ 0.4	2	≤ 30	0	30	4	2	102
RG 140 N	≤ 0.4	3	≤ 60	0	60	4	2	103
RG 160 N	≤ 0.4	2	≤ 30	0	30	20	2	104
RG 160 NTD	≤ 0.4	2	≤ 60	0	60	20	6	105
RG 190 TD	≤ 0.4	2	≤ 60	0	60	20	6	106
RG 220 TD	≤ 0.4	2	≤ 60	0	60	20	6	107
RG 225 TD	≤ 0.4	2	≤ 60	0	60	20	6	108
RET 97 TD	≤ 0.4	2	≤ 60	0	60	20	6	109
REF 100	≤ 0.4	2	≤ 30	0	30	4	2	110
RER 120 TD	≤ 0.4	2	≤ 60	0	60	20	6	112
RER 133 TD	≤ 0.4	2	≤ 60	0	60	20	6	117
RER 160 NTD	≤ 0.4	2	≤ 60	0	60	20	6	119
REF 175 TD	≤ 0.4	2	≤ 60	0	60	20	6	120
RER 175 TD	≤ 0.4	2	≤ 60	0	60	20	6	121
RER 190 TD	≤ 0.4	2	≤ 60	0	60	20	6	122
RER 220 TD	≤ 0.4	2	≤ 60	0	60	20	6	128
RER 225 TD	≤ 0.4	2	≤ 60	0	60	20	6	129

Subject to change

Note:
Fans that come with these fan specials could have variations with respect to the temperature range, voltage range, and power consumption compared to standard fans without specials.

Speed signal /12

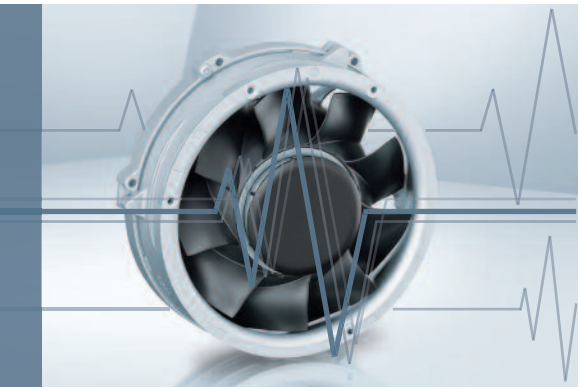

- Speed-proportional, square-wave signal for external monitoring of the fan motor speed
- 2, 3, or 6 pulses per revolution
- TTL-compatible
- Integrated pull-up resistor
- Connection via separate cable
- The sensor signal also serves as a major comparison variable for setting and maintaining the setpoint speed for interactive or controlled cooling with one or more interconnected fans.

Electrical hookup

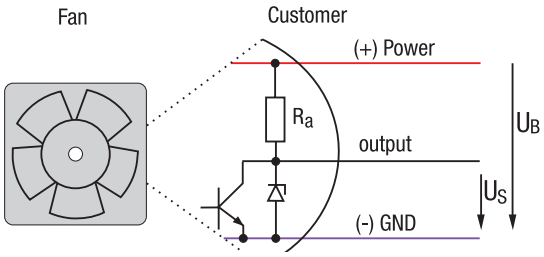

All voltages measured to ground.

Signal output voltage

Standard signal for all models (exceptions see below)

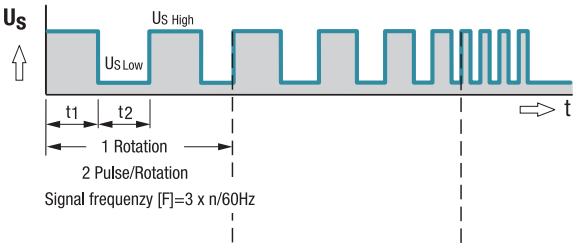

For multi options control input and 4100 NH7 and NH8

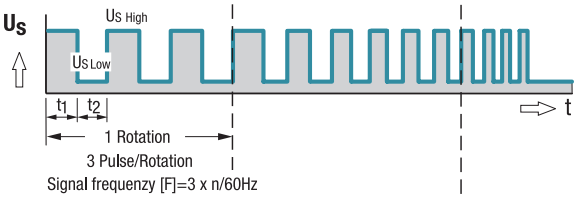

All TD Fans e.g. 6300 TD

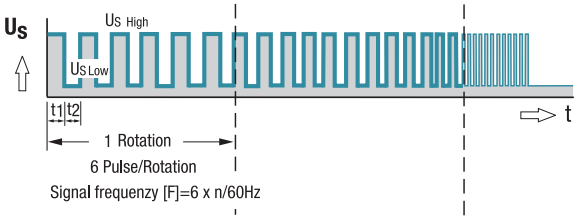

Fan speed

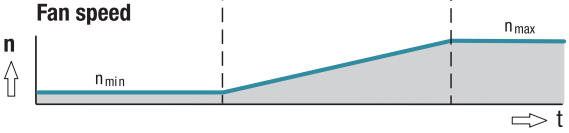

Signal data	Speed signal U_S Low	Condition: I_{sink}	Speed signal U_S High	Condition: I_{source}	Admissible sink current I_{sink} max.	Fan description Basic type
Type	**VDC**	**mA**	**VDC**	**mA**	**mA**	**Page**
614 N/12 GM	≤ 0.4	1	2.5–5.5	1	1	39
618 N/12 N	≤ 0.4	1	2.5–5.5	1	1	39
8412 N/12 H	≤ 0.4	1	2.5–5.5	1	1	44
4412 F/12 GM	≤ 0.4	1	2.5–5.5	1	1	53
4418 F/12	≤ 0.4	1	2.5–5.5	1	1	53
4312 /12 M	≤ 0.4	1	2.5–5.5	1	1	56
4314 /12	≤ 0.4	1	2.5–5.5	1	1	56
4182 N/12 X	≤ 0.4	1	2.5–5.5	1	1	60

Subject to change

Note:
With these fan options, deviations in regard to temperature range, voltage range and power consumption are possible compared with standard fan data.

ebmpapst

Available on request:
- Electrically isolated speed signal circuit
- Varying voltage potentials for power and logic circuit

Signal data	Speed signal U_S Low	Condition: I_{sink}	Speed signal U_S High	Condition: I_{source}	Admissible sink current I_{sink} max.	Fan description Basic type
Type	**VDC**	**mA**	**VDC**	**mA**	**mA**	**Page**
7214 N/12	≤ 0.4	2	2.5–5.5	1	≤ 20	70
6424/12 H	≤ 0.4	2	2.5–5.5	1	≤ 20	71
DV 6424/12	≤ 0.4	2	4.5–5.25	2	≤ 12	73
DV 6448/12	≤ 0.4	2	4.5–5.25	2	≤ 12	73
RG 125-19/12 N/12	≤ 0.4	1	2.5–5.5	1	≤ 1	103
RG 160-28/12 N/12	≤ 0.4	2	2.5–5.5	1	≤ 5	104
RG 160-28/18 N/12	≤ 0.4	2	2.5–5.5	1	≤ 20	104
RER 125-19/12 N/12	≤ 0.4	1	2.5–5.5	1	≤ 1	116
RER 160-28/12 N/12	≤ 0.4	2	2.5–5.5	1	≤ 5	118
RER 160-28/18 N/12	≤ 0.4	2	2.5–5.5	1	≤ 20	118

Subject to change

Note:
Fans that come with these fan specials could have variations with respect to the temperature range, voltage range, and power consumption compared to standard fans without specials.

Alarm signal /17

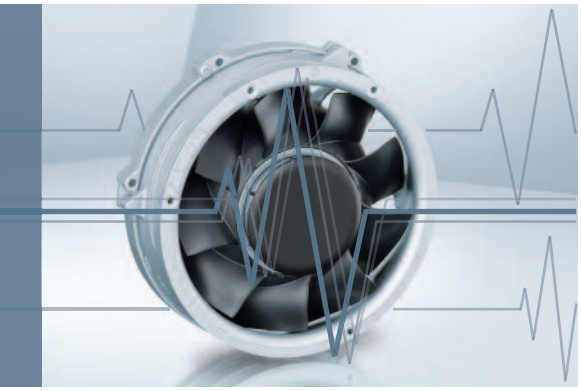

- Alarm signal for speed monitoring
- Signal output via open collector
- The fan emits a continuous high signal during trouble-free operation within the permissible voltage range.
- Low signal when speed limit is not reached
- After elimination of the fault, the fan returns to its setpoint speed; the alarm signal reverts to high.

Alarm signal data	Alarm output voltage $U_{A\,Low}$	Condition:	Condition: I_{sink} =	Alarm output voltage $U_{A\,High}$	Condition:	Condition: I_{source}	Alarm operating voltage $U_{BA\,max.}$	Max. permissible sink current	Alarm startup delay time t_6	Condition:	Speed limit n_G	Fan description Basic type
Type	**VDC**		**mA**	**VDC**		**mA**	**VDC**	**mA**	**s**		**min⁻¹**	**Page**
8318 /17	≤ 0.4	$n < n_G$	2	≤ 60	$n > n_G$	0	60	20	≤ 15	*	1500 ± 100	46
8318 /17 H	≤ 0.4	$n < n_G$	2	≤ 60	$n > n_G$	0	60	20	≤ 15	*	1500 ± 100	46
4318 /17	≤ 0.4	$n < n_G$	2	≤ 60	$n > n_G$	0	60	20	≤ 15	*	850 ± 100	56
4184 N /17 X	≤ 0.4	$n < n_G$	2	≤ 60	$n > n_G$	0	60	20	≤ 15	*	1500 ± 100	60

Subject to change

Note:
Fans that come with these fan specials could have variations with respect to the temperature range, voltage range, and power consumption compared to standard fans without specials.

Electrical hookup

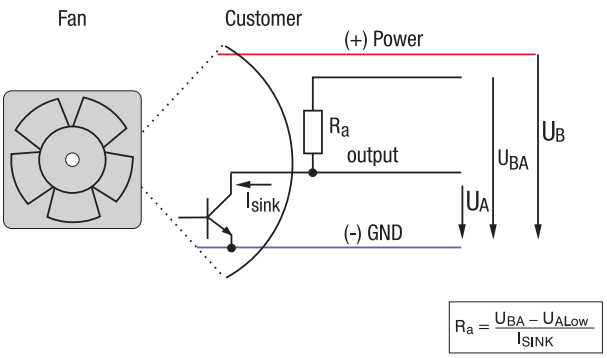

All voltages measured to ground.
External load resistor R_a from U_A to U_{BA} required.

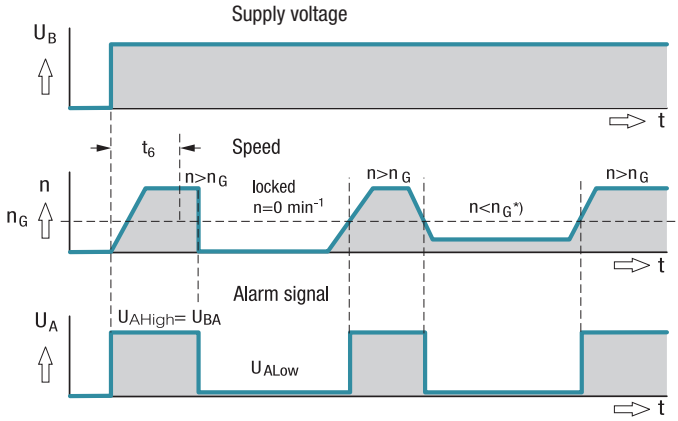

t_6 = Alarm signal suppression during startup.
* n < speed limit n_G by braking or locking.

ebmpapst

Available on request:

- Integrated signal storage for subsequent recognition of short-term faults (latch).
- Alarm circuit open collector or TTL.
- Electrically isolated for maximum device safety
  Defects in the power circuit do not affect the alarm circuit.

Alarm signaldata	Alarm output voltage $U_{A\ Low}$	Condition:	Condition: I_{sink} =	Alarm output voltage $U_{A\ High}$	Condition:	Condition: I_{source}	Alarm operating voltage $U_{BA\ max.}$	Max. permissible sink current	Alarm startup delay time t_6	Condition:	Speed limit n_G	Fan description Basic type
Type	**VDC**		**mA**	**VDC**		**mA**	**VDC**	**mA**	**s**		**min⁻¹**	**Page**
4312/17 MT VARIOFAN	≤ 0.4	$n < n_G$	2	≤ 60	$n > n_G$	0	60	20	≤ 15	*	1500 ± 100	57
4312/17 T VARIOFAN	≤ 0.4	$n < n_G$	2	≤ 60	$n > n_G$	0	60	20	≤ 15	*	1500 ± 100	57
4314/17 T VARIOFAN	≤ 0.4	$n < n_G$	2	≤ 60	$n > n_G$	0	60	20	≤ 15	*	1150 ± 100	57
4318/17 T VARIOFAN	≤ 0.4	$n < n_G$	2	≤ 60	$n > n_G$	0	60	20	≤ 15	*	850 ± 100	57
7214 N/17	≤ 0.4	$n < n_G$	2	≤ 60	$n > n_G$	0	60	15	≤ 15	*	1330 ± 60	70

Subject to change

* After switching on U_B

Note:
Fans that come with these fan specials could have variations with respect to the temperature range, voltage range, and power consumption compared to standard fans without specials.

Alarm signal /19

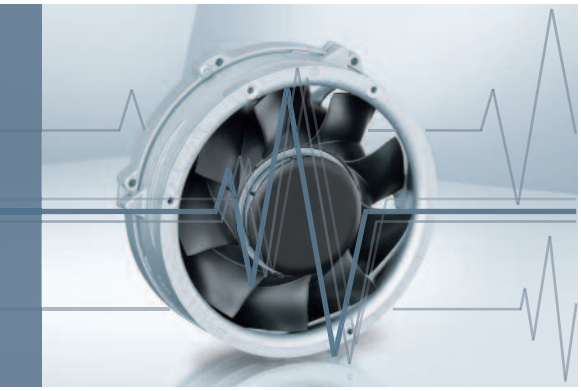

- Alarm signal for speed monitoring
- Signal output via open collector
- The fan emits a continuous low signal during trouble-free operation within the permissible voltage range.
- High signal when speed limit is not reached
- After elimination of the fault, the fan returns to its setpoint speed; the alarm signal reverts to low.

Alarm signal data	Alarm output voltage $U_{A\,Low}$	Condition:	Condition: I_{sink} =	Alarm output voltage $U_{A\,High}$	Condition:	Condition: I_{source}	Alarm operating voltage U_{BA} max.	Max. permissible sink current	Alarm startup delay time t_6	Condition:	Speed limit n_G	Fan description Basic type
Type	**VDC**		**mA**	**VDC**		**mA**	**VDC**	**mA**	**s**		**min⁻¹**	**Page**
8314/19 H	≤ 0.4	$n > n_G$	2	≤ 60	$n < n_G$	0	60	20	≤ 15	*	1500 ± 100	46
4312/19	≤ 0.4	$n > n_G$	2	≤ 60	$n < n_G$	0	60	20	≤ 15	*	1500 ± 100	56
7214 N/19	≤ 0.4	$n > n_G$	2	≤ 60	$n < n_G$	0	60	10	≤ 15	*	1800 ± 20	70
RLF 100-11/14/19	≤ 0.4	$n > n_G$	2	≤ 28	$n < n_G$	0	28	10	≤ 15	*	1900 ± 100	100
RER 101-36/18N/19 HH	≤ 0.4	$n > n_G$	2	≤ 28	$n < n_G$	0	28	10	≤ 15	*	1900 ± 100	111

Subject to change

* After switching on U_B

Note:
Fans that come with these fan specials could have variations with respect to the temperature range, voltage range, and power consumption compared to standard fans without specials.

Available on request:
- Integrated signal storage for subsequent recognition of short-term faults (latch).
- Alarm circuit open collector or TTL.
- Electrically isolated for maximum device safety; Defects in the power circuit do not affect the alarm circuit.

Electrical hookup

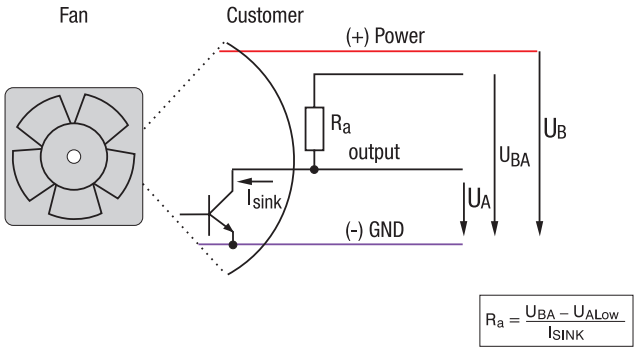

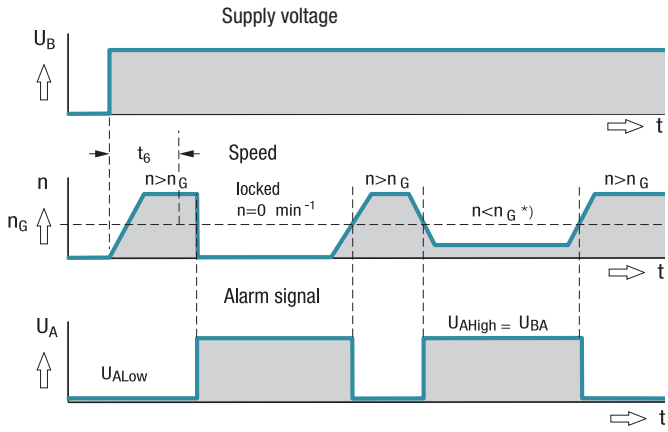

All voltages measured to ground
External load resistor R_a from U_A to U_{BA} required.

t_6 = Alarm signal suppression during startup.
* n < speed limit n_G by braking or locking.

ebmpapst

Alarm signal /37

Go / NoGo alarm

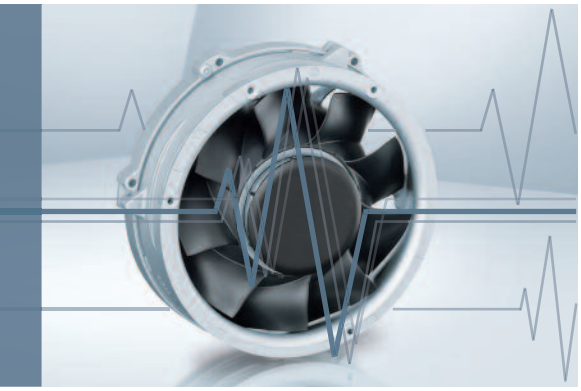

- Alarm signal for speed monitoring
- Signal output via open collector
- The fan emits a continuous high signal during trouble-free operation within the permissible voltage range.
- Low signal when speed limit is not reached
- After elimination of the fault, the fan returns to its setpoint speed; the alarm signal reverts to high.

Alarm signal data	Alarm output voltage $U_{A\,Low}$	Condition:	Condition: I_{sink} =	Alarm output voltage $U_{A\,High}$	Condition:	Condition: I_{source}	Alarm operating voltage $U_{BA\,max.}$	Max. permissible Sink current I_{sink}	Alarm delay time t_7	Condition:	Speed limit n_G	Fan description Basic type
Type	**VDC**		**mA**	**VDC**		**mA**	**VDC**	**mA**	**s**		**min⁻¹**	**Page**
8412 N/37 GMLV	≤ 0.4	$n \leq n_G$	2	≤ 28	$n > n_G$	0	28	10	<1	*	0	45
3412 N/37 GV	≤ 0.4	$n \leq n_G$	2	≤ 28	$n > n_G$	0	28	10	<1	*	0	49

Subject to change

* After switching on U_B

Note:
Fans that come with these fan specials could have variations with respect to the temperature range, voltage range, and power consumption compared to standard fans without specials.

Available on request:
- Alarm circuit TTL compatible.

Electrical hookup

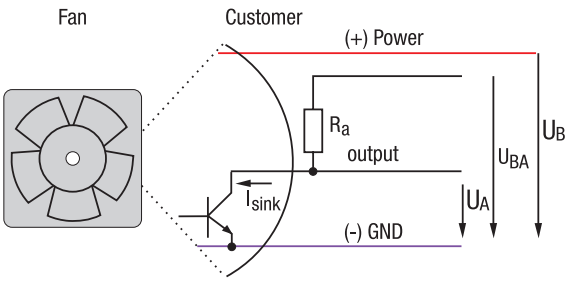

$$R_a = \frac{U_{BA} - U_{ALow}}{I_{SINK}}$$

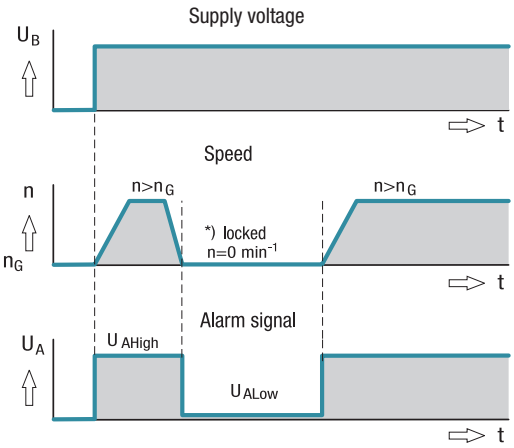

All voltages measured to ground
External load resistor R_a from U_A to U_{BA} required.

* Speed limit n_G = 0 rpm

Alarm signal /39

Go / NoGo alarm

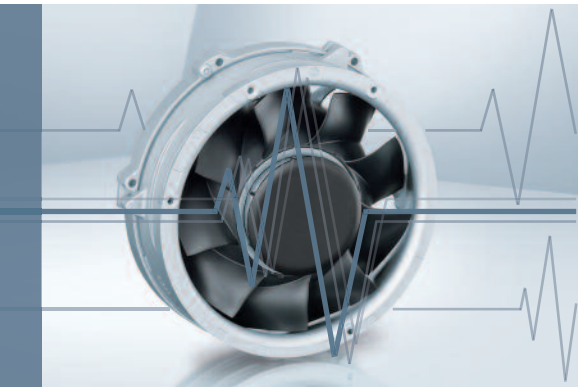

- Alarm signal for speed monitoring
- Signal output via open collector
- The fan emits a continuous low signal during trouble-free operation within the permissible voltage range.
- High signal when speed limit is not reached
- After elimination of the fault, the fan returns to its setpoint speed; the alarm signal reverts to low.

Alarm signal data	Alarm output voltage $U_{A\,Low}$	Condition:	Condition: I_{sink} =	Alarm output voltage $U_{A\,High}$	Condition:	Condition: I_{source}	Alarm operating voltage $U_{BA\,max.}$	Max. permissible Sink current I_{sink}	Alarm delay time t_7	Condition:	Speed limit n_G	Fan description Basic type
Type	**VDC**		**mA**	**VDC**		**mA**	**VDC**	**mA**	**s**		**min⁻¹**	**Page**
412/39	≤ 0.5	$n > n_G$	2	≤ 28	$n = n_G$	0	28	10	<1	*	0	33
612 F/39 H	≤ 0.5	$n > n_G$	2	≤ 28	$n = n_G$	0	28	10	<1	*	0	36
614 N/39 M	≤ 0.5	$n > n_G$	2	≤ 28	$n = n_G$	0	28	10	<1	*	0	39
618 N/39 N	≤ 0.5	$n > n_G$	2	≤ 28	$n = n_G$	0	28	10	<1	*	0	39
3412 N/39 H	≤ 0.5	$n > n_G$	2	≤ 28	$n = n_G$	0	28	10	<1	*	0	48
3414 N/39 HH	≤ 0.5	$n > n_G$	2	≤ 28	$n = n_G$	0	28	10	<1	*	0	48
4412 F/39 GL	≤ 0.5	$n > n_G$	2	≤ 28	$n = n_G$	0	28	10	<1	*	0	53
4412 F/39 M	≤ 0.5	$n > n_G$	2	≤ 28	$n = n_G$	0	28	10	<1	*	0	53
4414 F/39	≤ 0.5	$n > n_G$	2	≤ 28	$n = n_G$	0	28	10	<1	*	0	53
4414 FN/39 H	≤ 0.4	$n > n_G$	2	≤ 30	$n = n_G$	0	30	4	<1	*	0	55

Subject to change

* After switching on U_B

Note:
Fans that come with these fan specials could have variations with respect to the temperature range, voltage range, and power consumption compared to standard fans without specials.

Electrical hookup

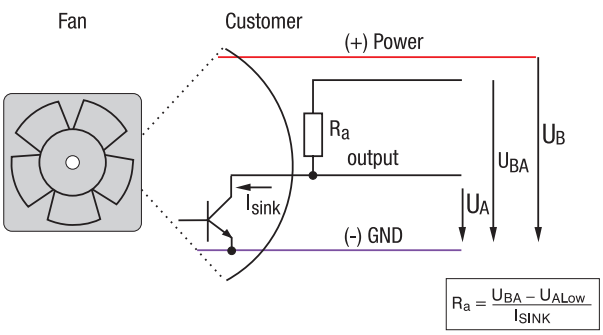

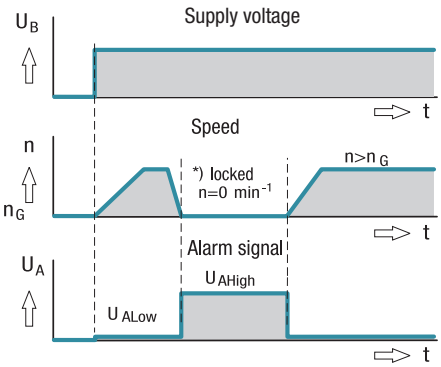

All voltages measured to ground
External load resistor R_a from U_A to U_{BA} required.

* Speed limit n_G = 0 rpm

ebmpapst

Vario-Pro®

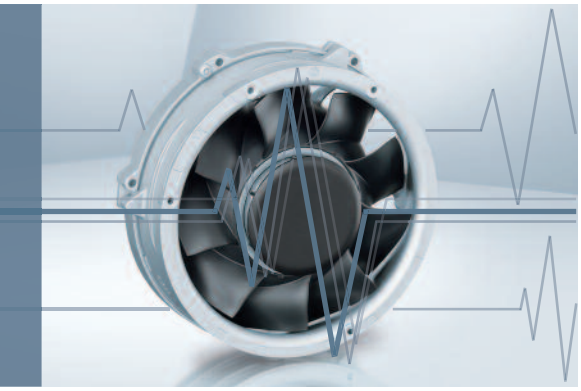

- "Software instead of hardware" aptly describes the unique fan concept. Fans come equipped with tailor-made intelligence for cooling electronics.
- The main advantages are flexible configuration based on software, faster availability, sampling from the factory, and the ability to supply customer-specific solutions in any quantity.

Vario-Pro features

External speed setting

- Speed setting via temperature, PWM or analog control voltage See page 178 (Speed setting)
- Description of speed curve with up to 14 selectable interpolation points. Linear interpolation between the points.
- 0 rpm speed possible
- Sensor break detection: If the sensor signal is lost, the fan will operate at any programmable speed.

Alarm and tachometer functions

- Optional alarm and/or tachometer function
- Selectable alarm speed limit (with hysteresis) and alarm delay time
- Storing of the alarm signal
- Delay only when starting or permanently active
- "High" or "low" output signal for alarm
- Optional alarm if temperature sensor fails
- Optional alarm in case of overtemperature

Motor management

- High control accuracy due to digital motor management
- Increased operating efficiency due to optimum coordination of motor hardware and software

Speed setting via temperature sensor

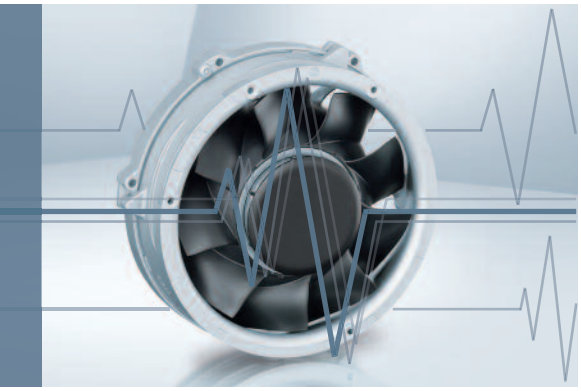

– The control variable is a temperature sensor that is either integrated in the fan or connected to an additional control cable.

External temperature sensor type T

– Ext. NTC resistor type LZ370 (p. 257) is required (not included in the standard scope of delivery)

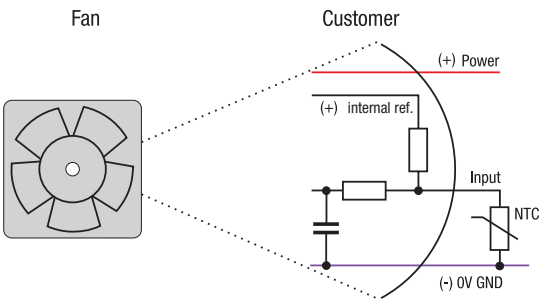

Internal temperature sensor type I

– NTC integrated in the fan hub

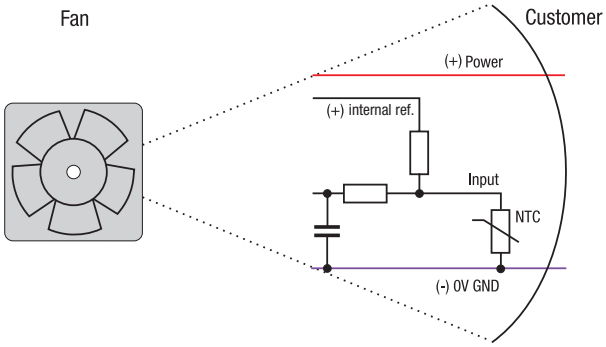

Standard speed/temperature curve for type T and type I

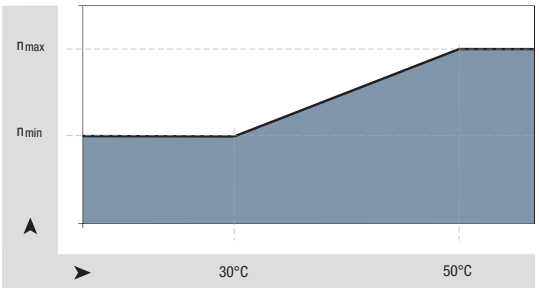

$n_{min} \approx {}^{1}/_{2}\, n_{max}$
$T_{min} \approx 30\ °C$; $T_{max} = 50\ °C$

Optionally available with selectable temperature/speed curve

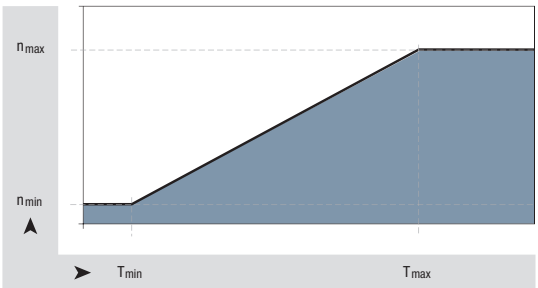

$n_{min} \approx 800\ {}^{1}/_{min}$ n_{max} based on model
$T_{min} \approx 5\ °C$ $T_{max} \leq 85\ °C$, based on model

ebmpapst

Speed setting via control voltage or PWM signal

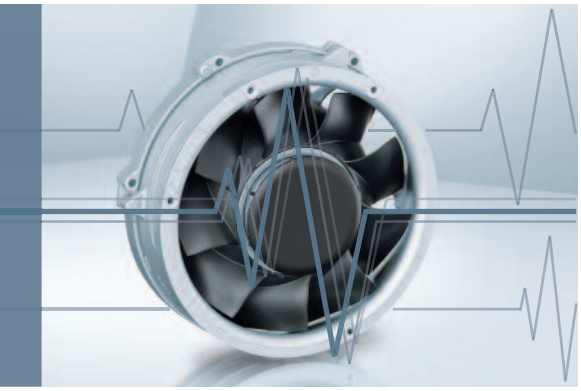

– The control variable is a PWM signal or analog control voltage.

Speed setting via analog control voltage type A

– Standard control range 0 ... 10 V

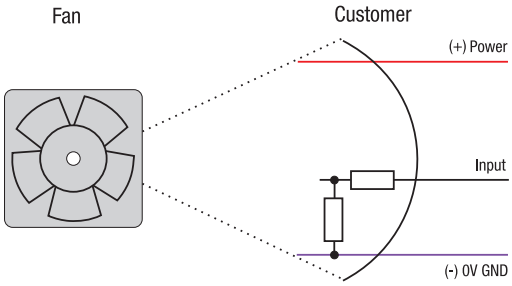

Typical input resistance > 10 k

Speed setting via PWM type P

– Standard PWM signal in two versions
  a) PWM frequency, mainly 1 ... 10 kHz (0-100%), Open-collector input
  b) Four-wire interface according to Intel specifications for 12 VDC fans, PWM frequency 25 kHz, incl. speed signal /2

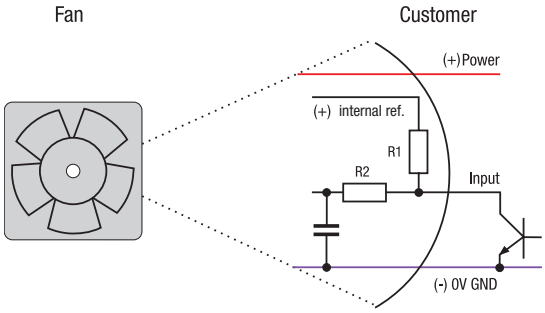

– Optional with potentiometer

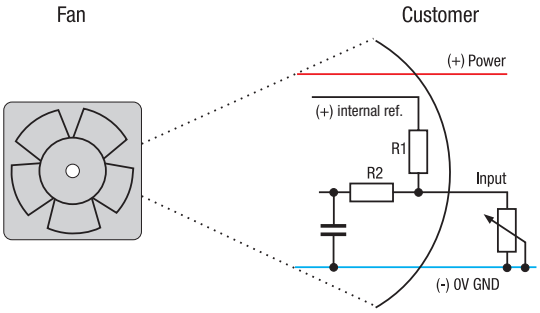

Internal reference = + 5 V
R1 typical 4.7...10 kΩ
R2 typical 100 kΩ

Standard P / A curve

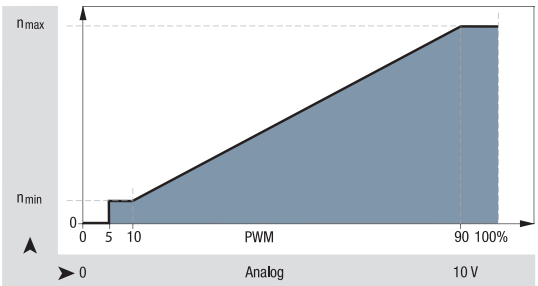

Optionally available with selectable P / A speed curve

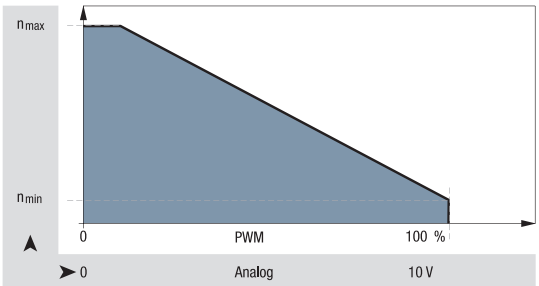

Speed setting via Control input

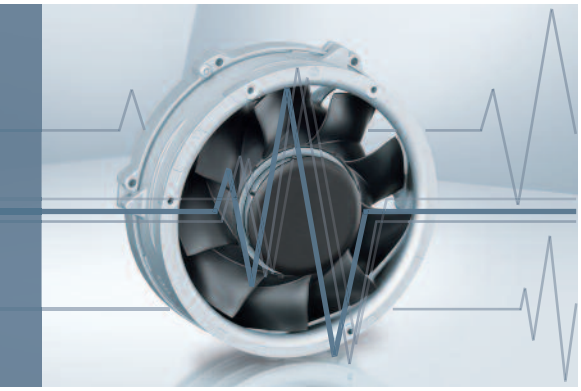

- Customer can operate input either with PWM signal, analog voltage, external temperature control module, or resistor.
- The control signal speed characteristics of the fan differ from the standard curve of the A and P inputs (see p. 179).
- To reach the maximum speed, the control cable must be connected to the U_B.
- The control input is usually combined with an open collector tachometer (type /2, see page 168).

Speed setting via multi-option control input type 0

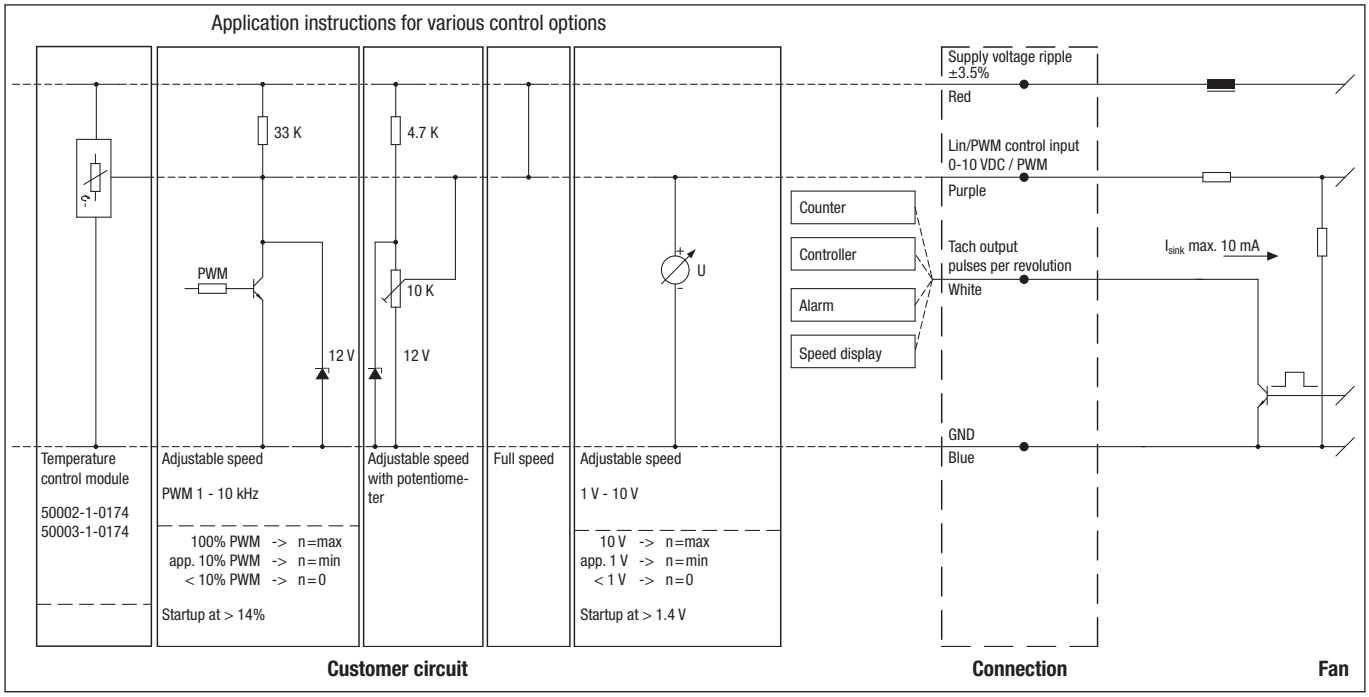

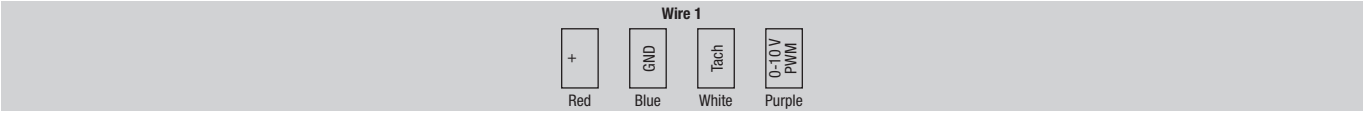

Wire	Connection	Color	Assignment/function
1	+	Red	Supply voltage ripple ±3.5%
	GND	Blue	GND

Wire	Connection	Color	Assignment/function
1	Tach	White	Tach output:
			3 Impulse/revolution
	0-10 V / PWM	Purple	Control input (impedance 100 kV)

ebmpapst

Protected fans

against environmental conditions

- Capable of satisfying special requirements for a broad range of applications
- Resistance of fans to environmental conditions such as dust, splashing water, humidity, spray water, and salt spray.
- Competent solutions to adapt fans to environmental conditions.

Moisture protection
A coat of paint over the motor and circuit board protect the fans against spray water and condensation.

Degree of protection IP 54 / IP 68*
In the degree of protection IP 54, the motor and circuit boards are coated and therefore protected against spray water and moisture.
The degree of protection IP 68 is important for ebm-papst products, as it ensures a high degree of protection for the encapsulated motor and electronics against foreign bodies and water, while protecting the user against potential hazards upon contact. Degrees of protection higher than IP 68 are possible on request.

Salt spray protection
Salt spray represents one of the most difficult requirements for product durability. ebm-papst has the technology to protect fans and blowers from salt spray reliably and for the long term.

Stainless steel bearings
Special bearings made of stainless steel provide additional protection.

Solutions that are available and are used may differ depending on the fan size.
We would be glad to develop solutions tailored to the demands of your application.

Degree of protection – IP code*			
	Protection against foreign bodies and accidental contact (first digit)		Water protection (second digit)
X	No protection	X	No protection
1	Protection against foreign objects > 50 mm (back of the hand)	1	Protection against dripping water or condensation
2	Protection against foreign objects > 12 mm (finger)	2	Protection against dripping water, fans tilted 15° from vertical
3	Protection against foreign objects > 2.5 mm (tool)	3	Protection against sprayed water up to 60° from vertical
4	Protection against foreign objects > 1 mm (wire)	4	Protection against sprayed water from all sides
5	Protection against dust in harmful quantities	5	Protection against low-pressure water jets
6	Dust-proof	6	Protection against high-pressure water jets
		7	Protection against temporary submersion (15 cm - 1 m)
		8	Protection against continuous submersion

* IP = International degree of protection marking
For AC-fans max. IP 65 available

ACmaxx / EC fans

ACmaxx / EC fans

Technical information
about ACmaxx / GreenTech EC tubeaxial fans

Progress made by ebm-papst
The best example: The ACmaxx fans from ebm-papst that offer substantial benefits thanks to an ingenious yet simple improvement over conventional AC fans.
The aim in developing the new ACmaxx series was to raise the technical standard of the conventional AC fan significantly and in the process facilitate a transition to new technology by maintaining the same fan sizes. In short, to make sure that the fans can be replaced 1:1 without any changes to the peripherals or voltage situation.
ebm-papst offers two generations of ACmaxx products that meet different needs.

What the ACmaxx and GreenTech EC compact fans have in common:
Energy efficiency
A drive concept based on state-of-the-art GreenTech EC technology with outstanding motor efficiency. Compared to AC fans of the same size, ACmaxx energy consumption is up to 77% lower – for greater cooling capacity! The energy savings alone means that the products pay for themselves after only a few months. The savings over the entire service life, especially in systems with multiple fans, is considerable.

Independent of the power frequency and line voltage
The ACmaxx and GreenTech EC tubeaxial fans are prepared for direct connection to a wide range of AC voltages and frequencies. The speed, and thus important properties of the fan such as air flow and noise, are independent of the power frequency and do not change, even within the defined voltage range. Voltage fluctuations in the power system are automatically compensated for.

Long service life
The efficiency of ACmaxx and GreenTech EC tubeaxial fan motors is up to 75% greater than that of conventional AC fan variants. This not only saves energy, it also means less self-heating of the motor. Especially the bearing system responds positively to the low self-heating. The reason why the fans have a service life that is up to 85% longer! This also extends the service and maintenance intervals significantly. Investments in replacement fans and every more expensive downtime are manageably small.

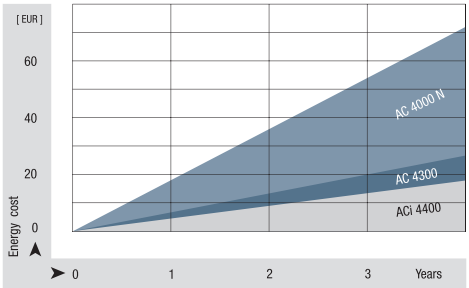

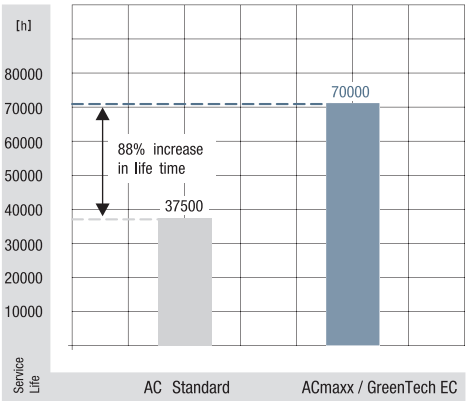

ACmaxx / EC fans

Technical information
about ACmaxx / GreenTech EC tubeaxial fans

Safety

- Safety certifications: UL, CSA and VDE 0805 / EN60950. VDE 0700 / EN60335 on request.
- Our fans have the CE mark of conformity.
- EMC protection:
  > EN61000-4-4 Level 1 (1 kV or 2 kV) B
  > EN61000-4-2 Level 8 kV/15 kV or 4 kV/8 kV
  > EN61000-4-3
  > EN61000-4-6
  > EN61000-4-8
  > EN55022 Class B

The environment

AC fans are extremely common and are used in a wide variety of applications. In control cabinet cooling, beer coolers, cooling cabinets, wood-burning stoves, medical devices – all have different requirements for resistance to environmental conditions. ACmaxx and GreenTech EC tubeaxial fans offer the same features for moisture protection, splash water, and tougher environmental conditions.

Particular design features of the GreenTech EC tubeaxial fan (ACi 4400): GreenTech EC compact fan is more compact!

As large as existing AC fans – and not a bit larger. This is the greatest feature of the new ACi 4400 GreenTech EC tubeaxial fans. Even in the hub area, the fan does not differ from typical 119 x 119 x 38 mm AC fans. Out with the AC, in with the ACi 4400 GreenTech EC tubeaxial fans – it's that simple.

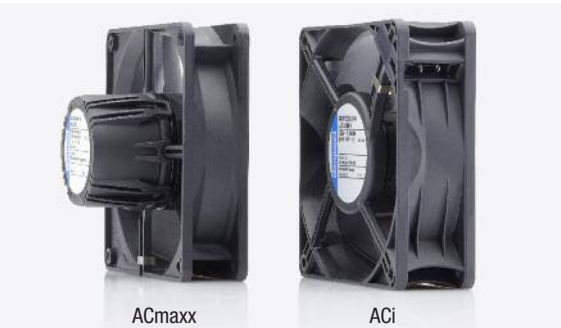

The GreenTech EC tubeaxial fan is more efficient!

ACmaxx saves energy, and the GreenTech EC tubeaxial fan generation saves even more. While an AC fan at 50 Hz can barely reach an overall efficiency of 5-6%, the ACmaxx makes it to about 20-25%. With the new ACi 4400 GreenTech EC tubeaxial fans, a remarkable level of up to 30% is reached. This is the result of the optimization of the entire package made up of the drive, electronics, AC/DC conversion, and aerodynamics. Thus the new GreenTech EC tubeaxial fan series boasts energy savings of almost 75% compared to the corresponding AC fan, thus providing significantly greater savings than the 40% level of the old AC 4300 generation.

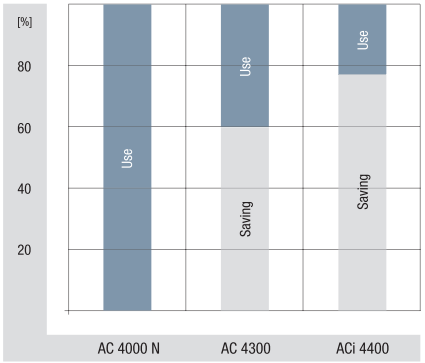

The GreenTech EC tubeaxial fan is quieter!

The ACi 4400 GreenTech EC tubeaxial fan is quieter! Quieter than AC fans and quieter than the existing ACmaxx generation. The reason for this is the optimized aerodynamics and the drive, which is optimized for minimum structure-borne noise. Thus the fan is only half as loud at a comparable air performance, and is up to 6 dB(A) quieter at some operating points.

Speed independent of voltage and frequency

For the ACi 4400 GreenTech EC tubeaxial fans, the speed, and thus the flow quantity and operating noise, are independent of the power supply and power frequency.

Versions are available for 115 VAC with a voltage range from 85 to 132 VAC and 230 VAC with a voltage range of 195 to 265 VAC. Operation with DC voltage is also possible. Voltage fluctuations and frequency differences in the power system are compensated for automatically.

ACmaxx / EC fans

Technical information
about ACmaxx / GreenTech EC tubeaxial fans

Particular design features of the ACmaxx:

Prepared for all common AC voltages
These models have a very wide voltage range from 85 to 265 VAC – the global voltage range, so to speak. This allows the fan to be used around the world, opening up large savings potentials. In addition to reduced logistics effort and stock keeping, worldwide availability is key. ACmaxx is compatible with every power supply and no switching is needed. From 85 to 265 volts and power frequencies of 50 and 60 Hz. Voltage fluctuations in the power system are automatically compensated for.

Higher performance
Unlike conventional AC technology, the state-of-the-art drive concept of this fan series is not linked to a fixed power frequency. This allows the motor speed to be increased over a wide range. Thus ACmaxx provides significantly greater air flow and significantly increased pressure.

Greater flexibility
The flexibility of ACmaxx is unique. With its intelligent features, ACmaxx can be adapted individually to the specific application: standby mode, overload mode at peak times, or night reduction all the way to temperature-controlled quiet operation are all possible. From speed monitoring to long-term function checks using an alarm or speed signal outputs, ACmaxx offers optional interfaces that allow you to monitor an operation easily and quickly.

You can find further information about these fan options in the "Fans specials" chapter, starting on page 161.
Or you can simply contact our application engineers to discuss your ideal ACmaxx or GreenTech EC tubeaxial fan.

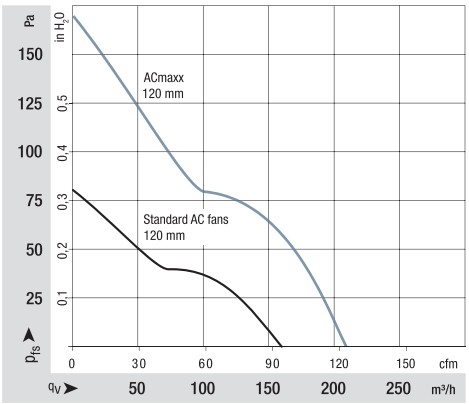

Fans for AC operation

Overview of air performance

Dimensions	Series	Air flow	Page
mm		m³/h	
□ 80 x 32	AC 8300	80	188
□ 92 x 38	AC 3200 J	144	189
□ 119 x 25	AC 4400 FN	205	190
□ 119 x 32	AC 4300	204	191
□ 119 x 38	ACi 4400	100...175	192
Ø 172 x 51	AC 6200 N	350	193
Ø 130	W1G 130	220...370	194
Ø 200	W3G 200	560...1065	196
Ø 250	W3G 250	900...1910	198
Ø 98.5 x 130	AC 100	40...135	200

Subject to change

Overview of technically feasible designs

Dimensions		VDE, UL, CSA	SINTEC sleeve bearings / ball bearings	Speed signal	Go / NoGo alarm	Alarm with speed limit	External temperature sensor	Internal temperature sensor	PWM control input	Analog control input	Multi-options control input	Moisture protection	IP >= 54	IP 68	Salt spray protection	Page
ACmaxx / ACi axial fans																
mm	Series						OPTIONAL									P.
□ 80 x 32	AC 8300	yes	■	•	•	•	•	•	•	•	–	•	•	–	•	188
□ 92 x 38	AC 3200 J	no	■	•	•	•	•	•	•	•	–	•	•	–	•	189
□ 119 x 25	AC 4400 FN	yes	■	•	•	•	•	•	•	•	–	•	–	–	–	190
□ 119 x 32	AC 4300	yes	■	•	•	•	•	•	•	•	–	•	•	•	•	191
□ 119 x 38	ACi 4400	yes	■	–	–	–	–	–	–	–	–	•	•	–	•	192
Ø 172 x 51	AC 6200 N	yes	■	•	•	•	•	•	•	•	–	•	•	–	•	193
Ø 98.5 x 130	AC 100	*	■	–	–	–	–	–	–	–	–	•	•	–	–	200

Subject to change

– Not yet available
• Available
▫ Sleeve bearings
■ Ball bearings

* Partially granted, partially in registration stage.

Please note that these special versions are not possible for all voltages and speeds, and not in all combinations.
The special versions are designed for specific customers and projects.
As a rule they are not available off the shelf and are tied to minimum volumes.
Please consult your customer support representative about the feasibility of your special variant.

Max. 80 m³/h

ACmaxx axial fans

☐ 80 x 32 mm

- **Material:** Housing: GRP[1)] (PBTP)
  Impeller: GRP[1)] (PA)
- **Direction of air flow:** Exhaust over struts
- **Direction of rotation:** Clockwise, looking towards rotor
- **Connection:** Via single wires AWG 22, TR 64
- **Highlights:** Universally usable for all power voltages between 85 and 265 VAC
- **Weight:** 325 g

- **Possible special versions:**
  (See chapter DC fans - specials)
  - Speed signal
  - Go / NoGo alarm
  - Alarm with speed limit
  - External temperature sensor
  - Internal temperature sensor
  - PWM control input
  - Analog control input
  - Moisture protection
  - Salt spray protection
  - Degree of protection: IP 54

1) Fiberglass-reinforced plastic

Series AC 8300

Nominal data	Air flow	Air flow	Nominal voltage	Frequency	Voltage range	Sound pressure level	Sound power level	Sintec sleeve bearings / Ball bearings	Power consumption	Nominal speed	Temperature range	Service life L_{10} (40 °C) ebm-papst standard / Service life L_{10} (T_{max}) ebm-papst standard	Life expectancy L_{10PC} (40 °C) see page 17	Curve
Type	**m³/h**	**cfm**	VAC	Hz	**VAC**	**dB(A)**	**Bel(A)**	☐ / ■	**Watts**	**rpm⁻¹**	**°C**	**Hours**	**Hours**	
AC 8300 H	80	47	**115 / 230**	**50 / 60**	85 ... 265	48	6.2	■	8.3	5 000	-20...+75	55 000 / 20 000	92 500	¿

Subject to change

Speed variants available on request.

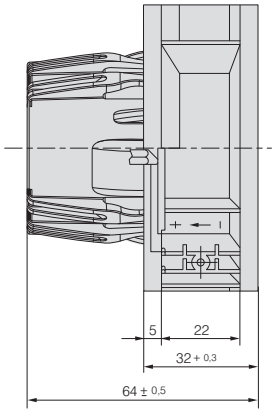

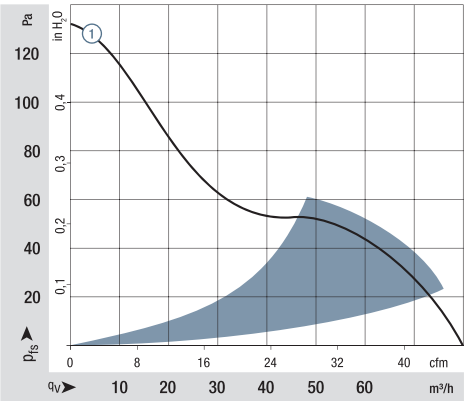

Air performance measured according to: ISO 5801.
Installation category A, without contact protection.
Noise: Total sound power level L_{WA} ISO 103002 measured on a hemisphere with a radius of 2 m.
Sound pressure level L_{pA} measured at 1 m distance from fan axis.
The values given are applicable only under the specified measuring conditions and may differ depending on the installation conditions.
In the event of deviation from the standard configuration, the parameters must be checked after installation!
For detailed information see
http://www.ebmpapst.com/general conditions

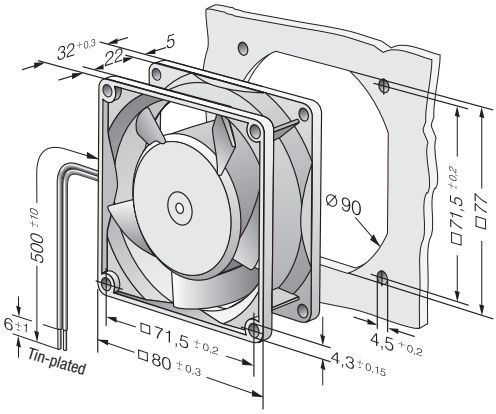

Max. 144 m³/h

ACmaxx axial fans

□ 92 x 38 mm

- **Material:** Housing: GRP[1)] (PBTP)
  Impeller: GRP[1)] (PA)
- **Direction of air flow:** Exhaust over struts
- **Direction of rotation:** Clockwise, looking towards rotor
- **Connection:** Via single wires AWG 22, TR 64
- **Highlights:** Universally usable for all power voltages between 85 and 265 VAC
- **Weight:** 325 g

- **Possible special versions:**
  (See chapter DC fans - specials)
  - Speed signal
  - Go / NoGo alarm
  - Alarm with speed limit
  - External temperature sensor
  - Internal temperature sensor
  - PWM control input
  - Analog control input
  - Moisture protection
  - Salt spray protection
  - Degree of protection: IP 54

1) Fiberglass-reinforced plastic

Series AC 3200 J

Nominal data	Air flow	Air flow	Nominal voltage	Frequency	Voltage range	Sound pressure level	Sound power level	Sintec sleeve bearings / Ball bearings	Power consumption	Nominal speed	Temperature range	Service life L_{10} (40 °C) ebm-papst standard	Service life L_{10} (T_{max}) ebm-papst standard	Life expectancy L_{10}IPC (40 °C) see page 17	Curve
Type	**m³/h**	**cfm**	VAC	Hz	**VAC**	**dB(A)**	**Bel(A)**	□ / ■	**Watts**	**rpm⁻¹**	**°C**	**Hours**		**Hours**	
AC 3200 JH	144	85	**115 / 230**	**50 / 60**	85 ... 265	55	6.4	■	12	6 800	-20...+70	70 000 / 35 000		117 500	①

Subject to change

Speed variants available on request.

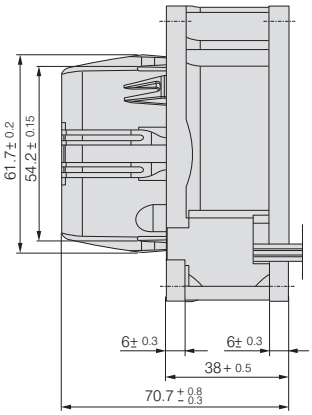

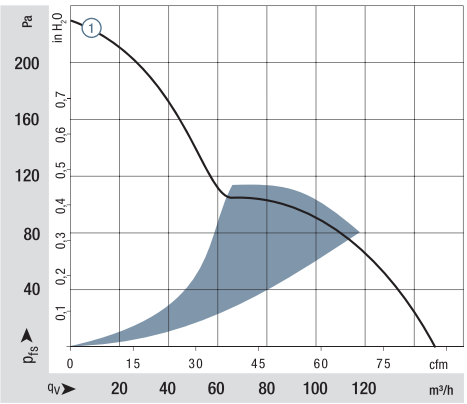

Air performance measured according to: ISO 5801.
Installation category A, without contact protection.
Noise: Total sound power level L_WA ISO 103002 measured on a hemisphere with a radius of 2 m.
Sound pressure level L_pA measured at 1 m distance from fan axis.
The values given are applicable only under the specified measuring conditions and may differ depending on the installation conditions.
In the event of deviation from the standard configuration, the parametersmust be checked after installation!
For detailed information see
http://www.ebmpapst.com/general conditions

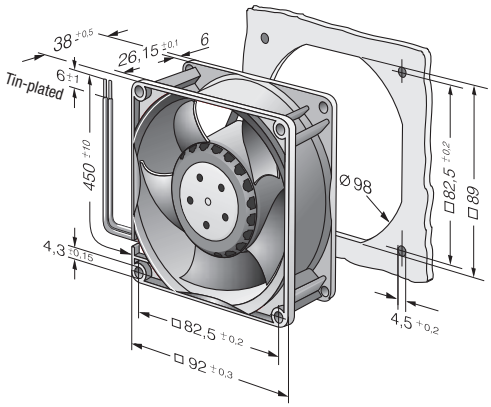

Max. 205 m³/h

ACmaxx axial fans

☐ 119 x 25 mm

- **Material:** Housing: GRP[1)] (PBTP)
  Impeller: GRP[1)] (PA)
- **Direction of air flow:** Exhaust over struts
- **Direction of rotation:** Counterclockwise, looking towards rotor
- **Connection:** Via single wires AWG 22, TR 64
- **Highlights:** Universally usable for all power voltages between 85 and 265 VAC
- **Weight:** 370 g

- **Possible special versions:**
  (See chapter DC fans - specials)
  - Speed signal
  - Go / NoGo alarm
  - Alarm with speed limit
  - External temperature sensor
  - Internal temperature sensor
  - PWM control input
  - Analog control input
  - Moisture protection

1) Fiberglass-reinforced plastic

Series AC 4400 FN

Nominal data	Air flow	Air flow	Nominal voltage	Frequency	Voltage range	Sound pressure level	Sound power level	Sintec sleeve bearings / Ball bearings	Power consumption	Nominal speed	Temperature range	Service life L_{10} (40 °C) ebm-papst standard / Service life L_{10} (T_{max}) ebm-papst standard	Life expectancy L_{10PC} (40 °C) see page 17	Curve
Type	**m³/h**	**cfm**	VAC	Hz	**VAC**	**dB(A)**	**Bel(A)**	☐ / ■	**Watts**	**rpm⁻¹**	**°C**	**Hours**	**Hours**	
AC 4400 FNN	205	121	**115 / 230**	**50 / 60**	85 ... 265	53	6.2	■	12	4 850	-20...+70	60 000 / 30 000	102 500	①

Subject to change

Speed variants available on request.

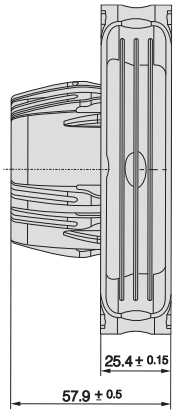

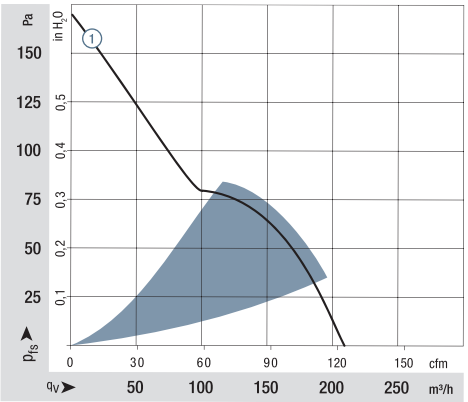

Air performance measured according to: ISO 5801.
Installation category A, without contact protection.
Noise: Total sound power level L_{WA} ISO 103002 measured on a hemisphere with a radius of 2 m.
Sound pressure level L_{pA} measured at 1 m distance from fan axis.
The values given are applicable only under the specified measuring conditions and may differ depending on the installation conditions.
In the event of deviation from the standard configuration, the parameters must be checked after installation!
For detailed information see
http://www.ebmpapst.com/general conditions

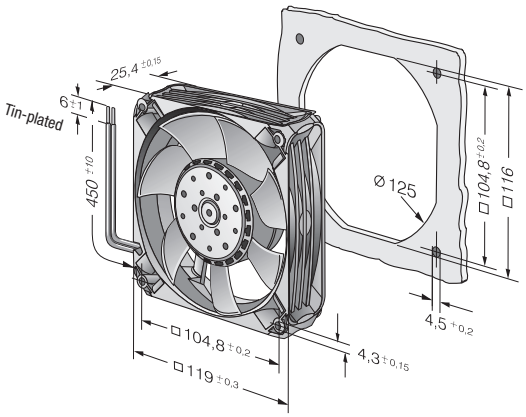

Max. 204 m³/h

ACmaxx axial fans

□ 119 x 32 mm

- **Material:** Housing: GRP[1)] (PBTP)
  Impeller: GRP[1)] (PA)
- **Direction of air flow:** Exhaust over struts
- **Direction of rotation:** Clockwise, looking towards rotor
- **Connection:** Via single wires AWG 22, TR 64
- **Highlights:** Universally usable for all power voltages between 85 and 265 VAC
- **Weight:** 325 g

1) Fiberglass-reinforced plastic

- **Possible special versions:**
  (See chapter DC fans - specials)
  - Speed signal
  - Go / NoGo alarm
  - Alarm with speed limit
  - External temperature sensor
  - Internal temperature sensor
  - PWM control input
  - Analog control input
  - Moisture protection
  - Salt spray protection
  - Degree of protection: IP 54 / IP 68

Series AC 4300

Nominal data Type	Air flow m³/h	Air flow cfm	Nominal voltage VAC	Frequency Hz	Voltage range VAC	Sound pressure level dB(A)	Sound power level Bel(A)	Sintec sleeve bearings / Ball bearings □ / ■	Power consumption Watts	Nominal speed rpm⁻¹	Temperature range °C	Service life L_{10} (40 °C) ebm-papst standard Hours	Service life L_{10} (T_{max}) ebm-papst standard Hours	Life expectancy L_{10}IPC (40 °C) see page 17 Hours	Curve
AC 4300 H	204	120	**115 / 230**	**50 / 60**	85 ... 265	51	6.4	■	12	3 400	-20...+70	45 000 / 22 500		75 500	①

Subject to change

Speed variants available on request.

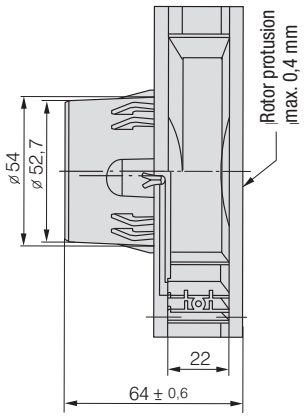

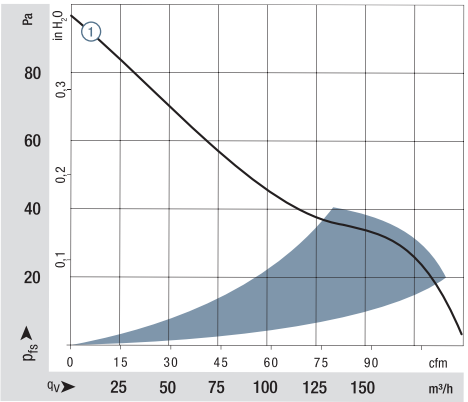

Air performance measured according to: ISO 5801.
Installation category A, without contact protection.
Noise: Total sound power level L_WA ISO 103002 measured on a hemisphere with a radius of 2 m.
Sound pressure level L_pA measured at 1 m distance from fan axis.
The values given are applicable only under the specified measuring conditions and may differ depending on the installation conditions.
In the event of deviation from the standard configuration, the parameters must be checked after installation!
For detailed information see http://www.ebmpapst.com/general conditions

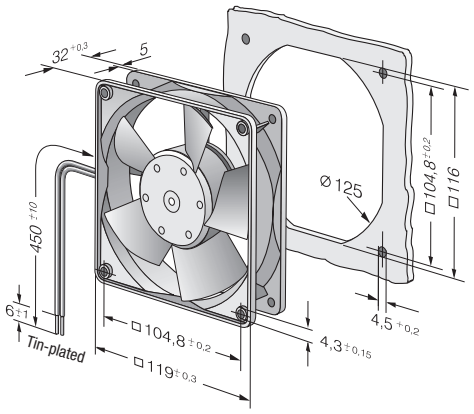

Max. 175 m³/h

GreenTech EC tubeaxial fans

☐ 119 x 38 mm

- **Material:** Housing: GRP[1)] (PBT)
  Impeller: GRP[1)] (PA)
- **Direction of air flow:** Exhaust over struts
- **Direction of rotation:** Clockwise, looking towards rotor
- **Connection:** with flat plug 2.8 x 0.5, optionally also with exposed external wires
- **Highlights:** Fully integrated converter and fan electronics
- **Weight:** 250 g

- **Possible special versions:**
  (See chapter DC fans - specials)
  - Moisture protection
  - Salt spray protection
  - Degree of protection: IP 54

1) Fiberglass-reinforced plastic

Series ACi 4400

Nominal data	Air flow	Air flow	Nominal voltage	Frequency	Voltage range	Sound pressure level	Sound power level	Sintec sleeve bearings / Ball bearings	Power consumption	Nominal speed	Temperature range	Service life L_{10} (40 °C) ebm-papst standard / Service life L_{10} (T_{max}) ebm-papst standard	Life expectancy L_{10}PC (40 °C) see page 17	Curve
Type	**m³/h**	**cfm**	VAC	Hz	**VAC**	**dB(A)**	**Bel(A)**	☐ / ■	**Watts**	**rpm⁻¹**	**°C**	**Hours**	**Hours**	
ACi 4420 ML	100	59	**230**	**50 / 60**	195...265	25	4.1	■	1.7	1 850	-40...+75	65 000 / 25 000	110 000	①
ACi 4420 N	147	86	**230**	**50 / 60**	195...265	36	4.9	■	2.8	2 700	-40...+75	65 000 / 25 000	110 000	②
ACi 4420 H	160	94	**230**	**50 / 60**	195...265	39	5.1	■	3.2	3 000	-40...+75	65 000 / 25 000	110 000	③
ACi 4420 HH	175	103	**230**	**50 / 60**	195...265	42	5.3	■	4.6	3 300	-40...+75	65 000 / 25 000	110 000	④
ACi 4410 HH	175	103	**115**	**50 / 60**	85...132	42	5.3	■	4.4	3 300	-40...+75	65 000 / 25 000	110 000	④

Subject to change

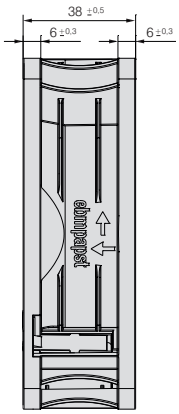

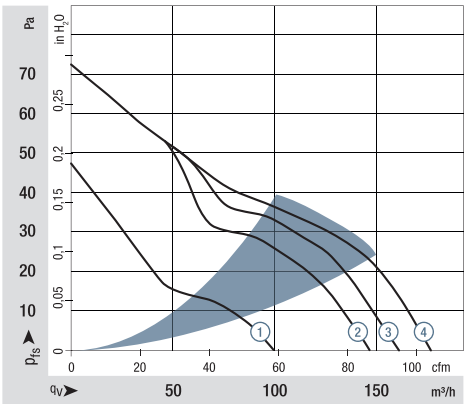

Air performance measured according to: ISO 5801.
Installation category A, without contact protection.
Noise: Total sound power level L_WA ISO 103002 measured on a hemisphere with a radius of 2 m.
Sound pressure level L_pA measured at 1 m distance from fan axis.
The values given are applicable only under the specified measuring conditions and may differ depending on the installation conditions.
In the event of deviation from the standard configuration, the parameters must be checked after installation!
For detailed information see http://www.ebmpapst.com/general conditions

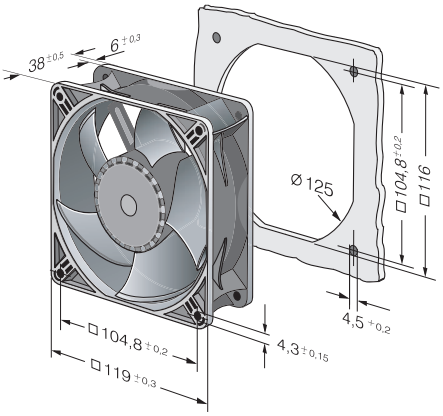

Max. 350 m³/h

ACmaxx axial fans

Ø 172 x 51 mm

- **Material:** Housing: Die-cast aluminum
  Impeller: GRP[1)] (PA)
- **Direction of air flow:** Exhaust over struts
- **Direction of rotation:** Counterclockwise, looking towards rotor
- **Connection:** Via single wires AWG 22, TR 64
- **Highlights:** Universally usable for all power voltages between 85 and 265 VAC, 50-60 Hz
  Housing with grounding lug for screw M4 x 8 (Torx)
- **Weight:** 900 g

1) Fiberglass-reinforced plastic

- **Possible special versions:**
  (See chapter DC fans - specials)
  - Speed signal
  - Go / NoGo alarm
  - Alarm with speed limit
  - External temperature sensor
  - Internal temperature sensor
  - PWM control input
  - Analog control input
  - Moisture protection
  - Salt spray protection
  - Degree of protection: IP 54

Series AC 6200 N

Nominal data	Air flow	Air flow	Nominal voltage	Frequency	Voltage range	Sound pressure level	Sound power level	Sintec sleeve bearings / Ball bearings	Power consumption	Nominal speed	Temperature range	Service life L_{10} (40 °C) ebm-papst standard	Service life L_{10} (T_{max}) ebm-papst standard	Life expectancy L_{10}IPC (40 °C) see page 17	Curve
Type	**m³/h**	**cfm**	VAC	Hz	**VAC**	**dB(A)**	**Bel(A)**	□ / ■	**Watts**	**rpm⁻¹**	**°C**	**Hours**		**Hours**	
AC 6200 NM	350	206	**115 / 230**	**50 / 60**	85 ... 265	50	5.7	■	14	2 850	-20...+70	80 000 / 40 000		135 000	①

Subject to change

Speed variants available on request.

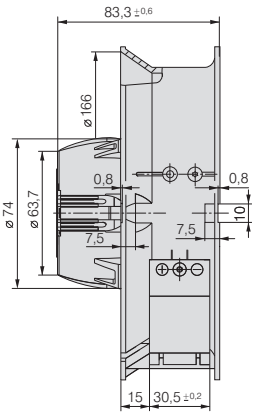

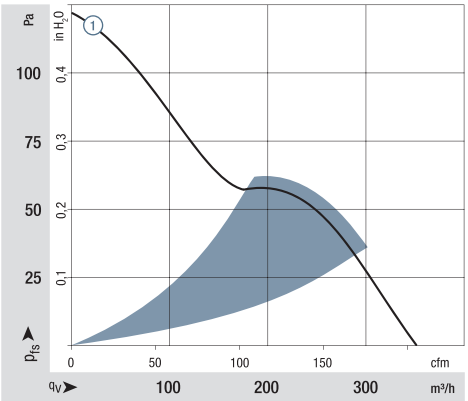

Air performance measured according to: ISO 5801.
Installation category A, without contact protection.
Noise: Total sound power level L_WA ISO 103002 measured on a hemisphere with a radius of 2 m.
Sound pressure level L_pA measured at 1 m distance from fan axis.
The values given are applicable only under the specified measuring conditions and may differ depending on the installation conditions.
In the event of deviation from the standard configuration, the parameters must be checked after installation!
For detailed information see
http://www.ebmpapst.com/general conditions

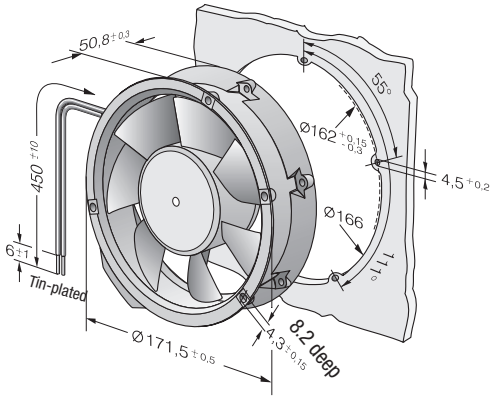

Max. 370 m³/h

Energy-saving axial fans

Ø 130 mm

- **Material:** Housing: PP plastic, fiberglass-reinforced; Blades: PA plastic, fiberglass-reinforced
- **Number of blades:** 7
- **Direction of air flow:** "V", exhaust over struts
- **Direction of rotation:** Counterclockwise, looking towards rotor
- **Degree of protection:** IP 54
- **Insulation class:** "B"
- **Installation position:** Any
- **Condensation drainage holes:** None
- **Mode of operation:** Continuous operation (S1)
- **Bearings:** Maintenance-free ball bearings

Nominal data		Curve	Nominal voltage	Frequency	Nominal speed	Max. power consumption[1]	Max. input current[1]	Max. back-pressure	Admissible amb. temp.	Weight	Connection diagram
Type	**Motor**		**VAC**	**Hz**	**rpm⁻¹**	**W**	**A**	**Pa**	**°C**	**kg**	
W1G130-AA49 -01	M1G 055-AI	A	1~ 115	50/60	3200	24	0.38	90	-30..+60	0.75	p. 264 / J7)
W1G130-AA25 -01	M1G 055-AI	B	1~ 230	50/60	3200	24	0.19	90	-30..+70	0.75	p. 264 / J7)

Subject to change

[1] Nominal data in operating point with maximum load and 115 or 230 VAC

Curves:

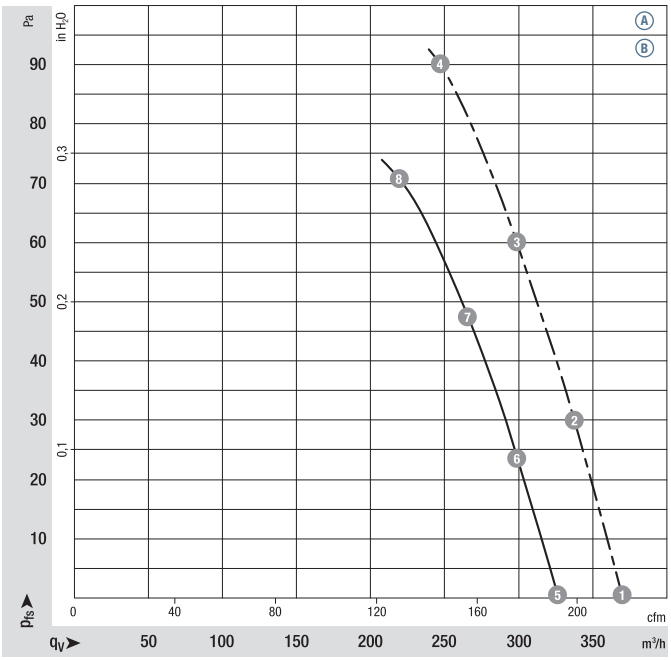

		n rpm⁻¹	P_{ed} W	I A	L_WA dB(A)
A	1	3200	23	0.38	63
A	2	3200	24	0.38	61
A	3	3200	24	0.38	60
A	4	3200	24	0.38	63
A	5	2800	16	0.26	60
A	6	2800	16	0.26	58
A	7	2800	16	0.26	57
A	8	2800	16	0.26	60
B	1	3200	23	0.19	63
B	2	3200	24	0.19	61
B	3	3200	24	0.19	60
B	4	3200	24	0.19	63
B	5	2800	16	0.13	60
B	6	2800	16	0.13	58
B	7	2800	16	0.13	57
B	8	2800	16	0.13	60

— – — $n_{max.}$ = 3200 min⁻¹ ——— n = 2800 min⁻¹ $n_{min.}$ = 1100 min⁻¹

Air performance measured according to: ISO 5801, installation category A, in ebm-papst full nozzle without contact protection. Suction-side noise levels: L_WA according to ISO 13347, L_pA measured at 1 m distance from fan axis. The values given are applicable only under the specified measuring conditions and may differ depending on the installation conditions. In the event of deviation from the standard configuration, the parameters must be checked after installation! For detailed information see http://www.ebmpapst.com/general conditions

ebmpapst

- **Motor protection:** Via electronics and thermal overload protector
- **Electrical hookup:** Plug-in connection on motor side
- **Protection class:** II
- **Conformity with standard(s):** CE; EN 60335-1
- **Approvals:** VDE, GOST (are available); UL, CSA (are applied for)
- **Speed:** Using the programming unit 2 speeds between n_{min} and n_{max} can be programmed

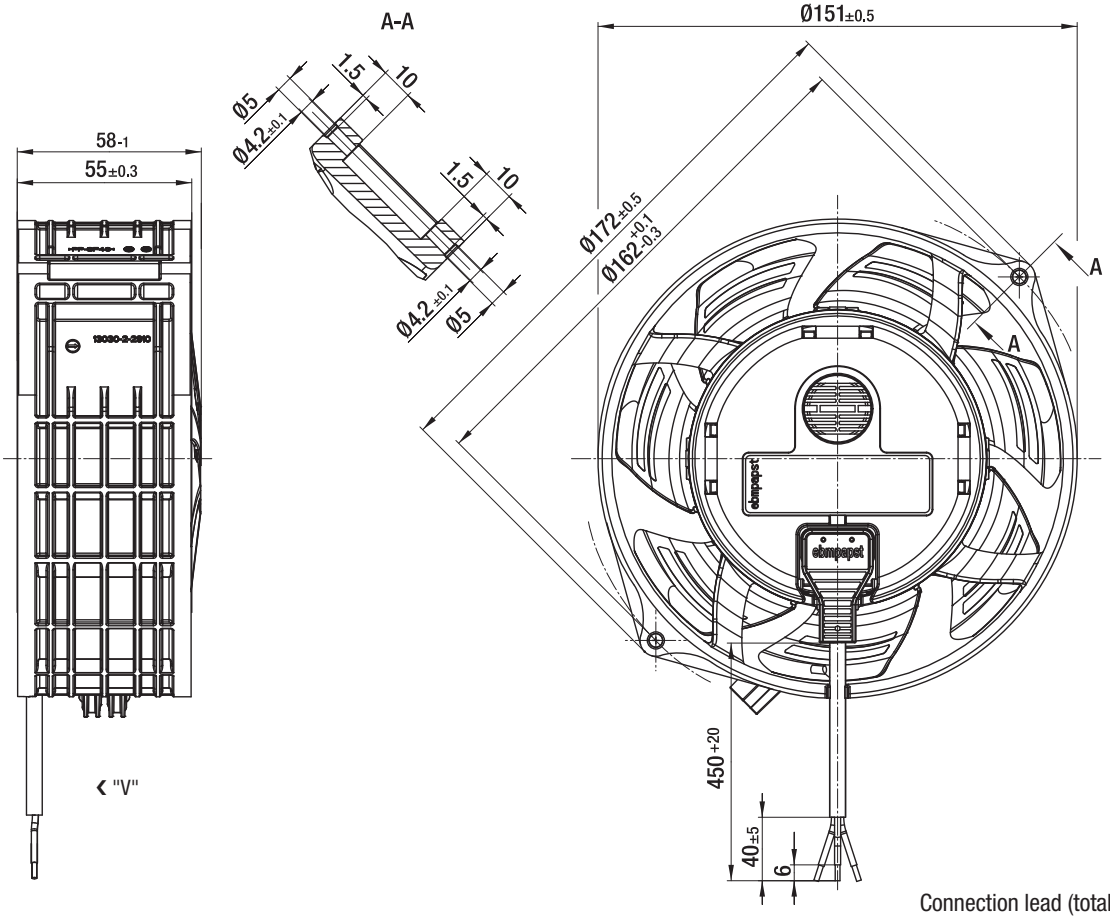

Connection lead (total length 450 mm) is fitted ex works and can be detached.

Max. 1065 m³/h

EC axial fans

Ø 200 mm

- **Material:** Housing: Die-cast aluminum
  Blades: PP plastic
  Rotor: Thick-film passivated
- **Number of blades:** 7
- **Direction of air flow:** "V"
- **Direction of rotation:** Counterclockwise, looking towards rotor
- **Degree of protection:** Depending on installation and position[2]
- **Insulation class:** "B"
- **Installation position:** Any
- **Condensate discharges:** None, open rotor
- **Mode of operation:** Continuous operation (S1)
- **Bearings:** Maintenance-free ball bearings

Nominal data		Curve	Nominal voltage	Frequency	Nominal speed	Max. power consumption[1]	Max. input current[1]	Max. back-pressure	Admissible amb. temp.	Weight	Technical features and connection diagram
Type	**Motor**		**VAC**	**Hz**	**rpm⁻¹**	**W**	**A**	**Pa**	**°C**	**kg**	
W3G200-HD01 -01	M3G 055-BD	A	1~ 200-240	50/60	2 900	54	0,55	96	-25..+60	1,6	P. 260 / H3)
W3G200-HD01 -03	M3G 055-BD	B	1~ 200-240	50/60	2 900	54	0,55	96	-25..+60	1,6	P. 261 / H4)
W3G200-HD23 -10	M3G 055-BD	C	1~ 115	50/60	2 900	65	1,00	94	-25..+60	1,6	P. 261 / H4)

Subject to change

[1] Nominal data in operating point with maximum load and 230 VAC

[2] Not suitable for permanent outdoor use. Special version available on request.

Curves:

A 2 Speed stages

B C Speed-controlled

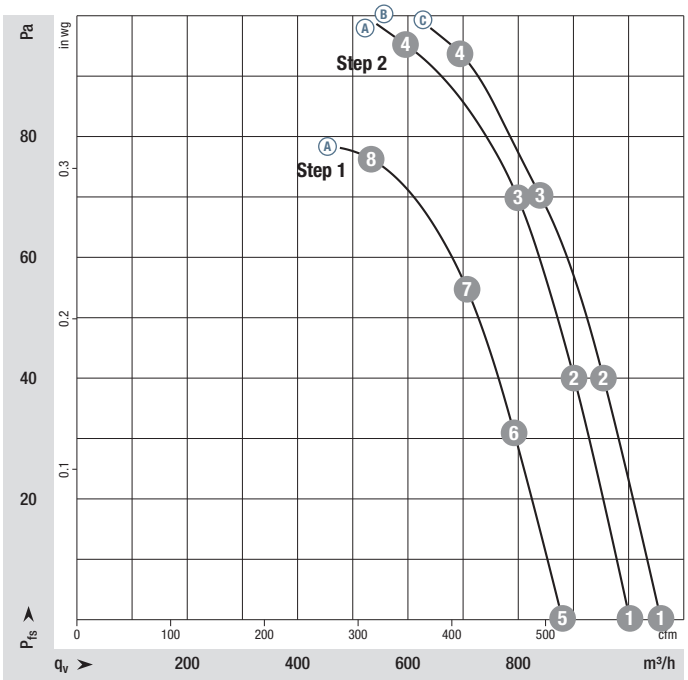

		n rpm⁻¹	P_{ed} W	I A	L_WA dB(A)
A	1	2970	50	0,49	65
A	2	2890	54	0,53	64
A	3	2830	58	0,56	65
A	4	2900	54	0,55	70
A	5	2645	36	0,37	62
A	6	2575	39	0,40	61
A	7	2530	42	0,42	62
A	8	2500	43	0,43	67
B	1	2970	50	0,49	65
B	2	2890	54	0,53	64
B	3	2830	58	0,56	65
B	4	2900	54	0,55	70
C	1	3150	62	1,00	66
C	2	3050	65	1,00	66
C	3	2930	65	1,00	72
C	4	2900	65	1,00	74

Air performance measured according to: ISO 5801. Installation category A, without contact protection. Suction-side noise levels: L_WA according to ISO 13347, L_pA measured at 1 m distance from fan axis. The values given are applicable only under the specified measuring conditions and may differ depending on the installation conditions. In the event of deviation from the standard configuration, the parameters must be checked after installation! For detailed information see http://www.ebmpapst.com/general conditions

ebmpapst

- **Technical features:** See connection diagram p. 260/261
- **Touch current:** <= 3.5 mA acc. to IEC 60990 (test circuit, illustration 4)
- **Electrical hookup:** Via terminal strip
- **Protection class:** I (with customer connection to grounding conductor)
- **Conformity with standard(s):** EN 60335-1, CE
- **Approvals:** VDE, cUR$_{US}$

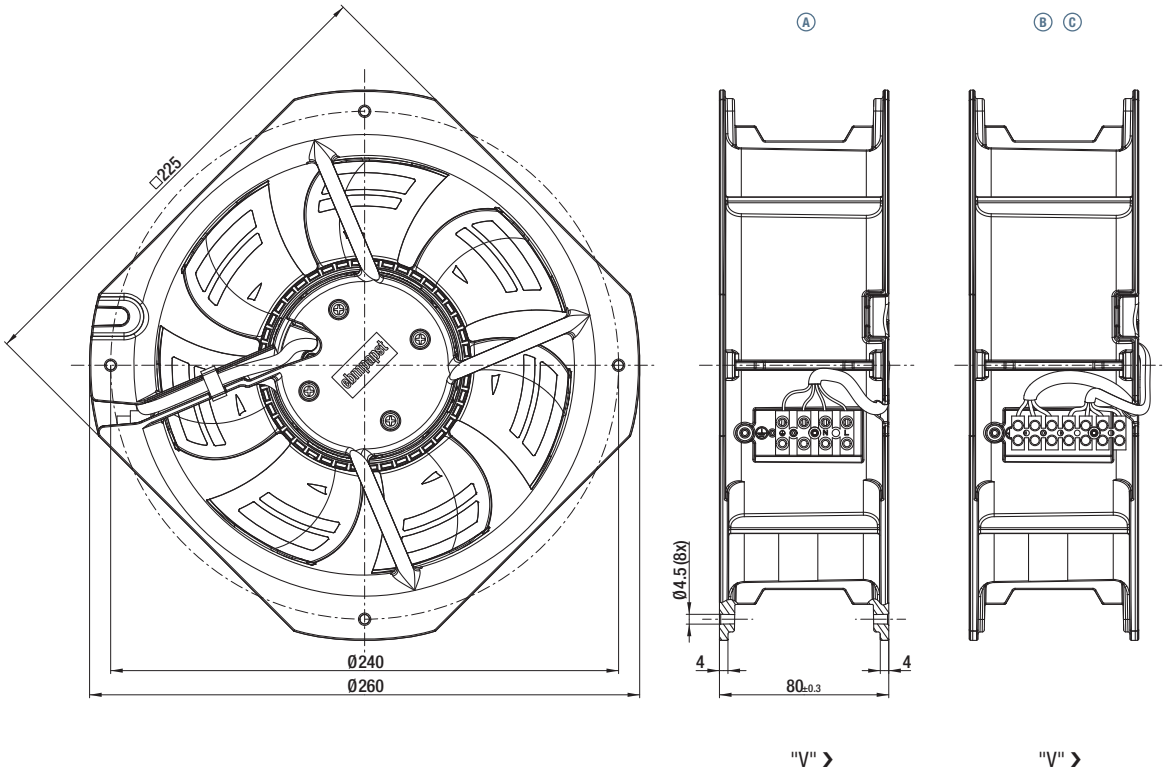

Max. 1910 m³/h

EC axial fans

Ø 250 mm

- **Material:** Housing: Die-cast aluminum
  Blades: PP plastic
  Rotor: Thick-film passivated
- **Number of blades:** 7
- **Direction of air flow:** "V"
- **Direction of rotation:** Counterclockwise, looking towards rotor
- **Degree of protection:** Depending on installation and position[2]
- **Insulation class:** "B"
- **Installation position:** Any
- **Condensate discharges:** None, open rotor
- **Mode of operation:** Continuous operation (S1)
- **Bearings:** Maintenance-free ball bearings

Nominal data		Curve	Nominal voltage	Frequency	Nominal speed	Max. power consumption[1]	Max. input current[1]	Max. back-pressure	Admissible amb. temp.	Weight	Technical features and connection diagram
Type	**Motor**		**VAC**	**Hz**	**rpm⁻¹**	**W**	**A**	**Pa**	**°C**	**kg**	
W3G250-HH07 -01	M3G 055-CF	A	1~ 200-240	50/60	2 330	83	0,72	100	-25...+60	2,1	P. 260 / H3)
W3G250-HH07 -03	M3G 055-CF	B	1~ 200-240	50/60	2 330	83	0,72	100	-25...+60	2,1	P. 261 / H4)
W3G250-HH53 -03	M3G 055-CF	C	1~ 115	50/60	2 040	56	0,90	80	-25...+50	2,1	P. 261 / H4)
W3G250-HK35 -11	M3G 055-CF	D	1~ 115	50/60	2 700	125	1,90	130	-25...+60	2,1	P. 261 / H4)

Subject to change

[1] Nominal data in operating point with maximum load and 230 VAC

[2] Not suitable for permanent outdoor use. Special version available on request.

Curves:

Ⓐ **2 Speed stages**

Ⓑ Ⓒ Ⓓ **Speed-controlled**

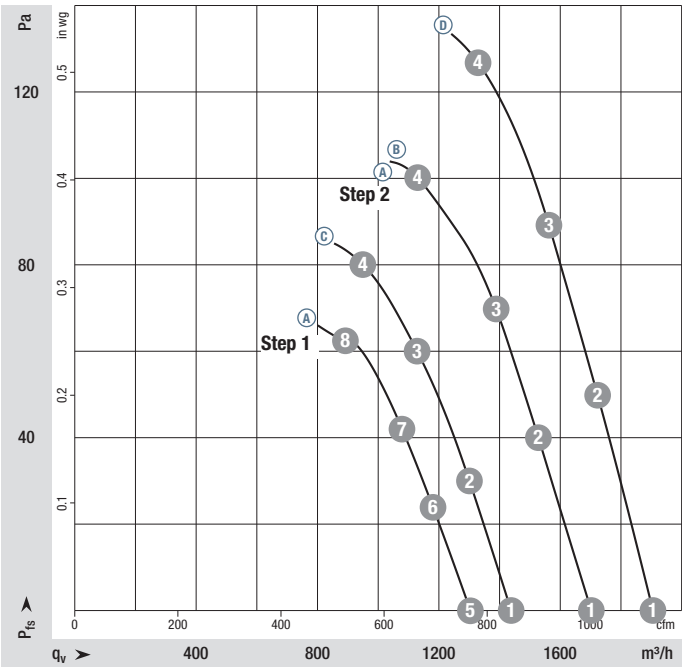

	n rpm⁻¹	P_{ed} W	I A	L_WA dB(A)
A 1	2465	67	0,59	69
A 2	2410	75	0,65	69
A 3	2375	80	0,68	68
A 4	2330	83	0,72	69
A 5	1900	33	0,33	63
A 6	1880	37	0,37	63
A 7	1860	40	0,38	62
A 8	1850	42	0,40	63
B 1	2465	67	0,59	69
B 2	2410	75	0,65	69
B 3	2375	80	0,68	68
B 4	2330	83	0,72	69
C 1	2140	43	0,72	63
C 2	2100	49	0,80	63
C 3	2070	53	0,86	64
C 4	2040	56	0,90	65
D 1	2820	93	1,43	70
D 2	2760	106	1,61	71
D 3	2725	114	1,72	71
D 4	2700	125	1,90	71

Air performance measured according to: ISO 5801. Installation category A, without contact protection. Suction-side noise levels: L_WA according to ISO 13347, L_pA measured at 1 m distance from fan axis. The values given are applicable only under the specified measuring conditions and may differ depending on the installation conditions. In the event of deviation from the standard configuration, the parameters must be checked after installation! For detailed information see http://www.ebmpapst.com/general conditions

ebmpapst

- **Technical features:** See connection diagram p. 260/261
- **Touch current:** <= 3.5 mA acc. to IEC 60990 (test circuit, illustration 4)
- **Electrical hookup:** Via terminal strip
- **Protection class:** I (with customer connection to grounding conductor)
- **Conformity with standard(s):** EN 60335-1, CE
- **Approvals:** VDE, cUR$_{US}$

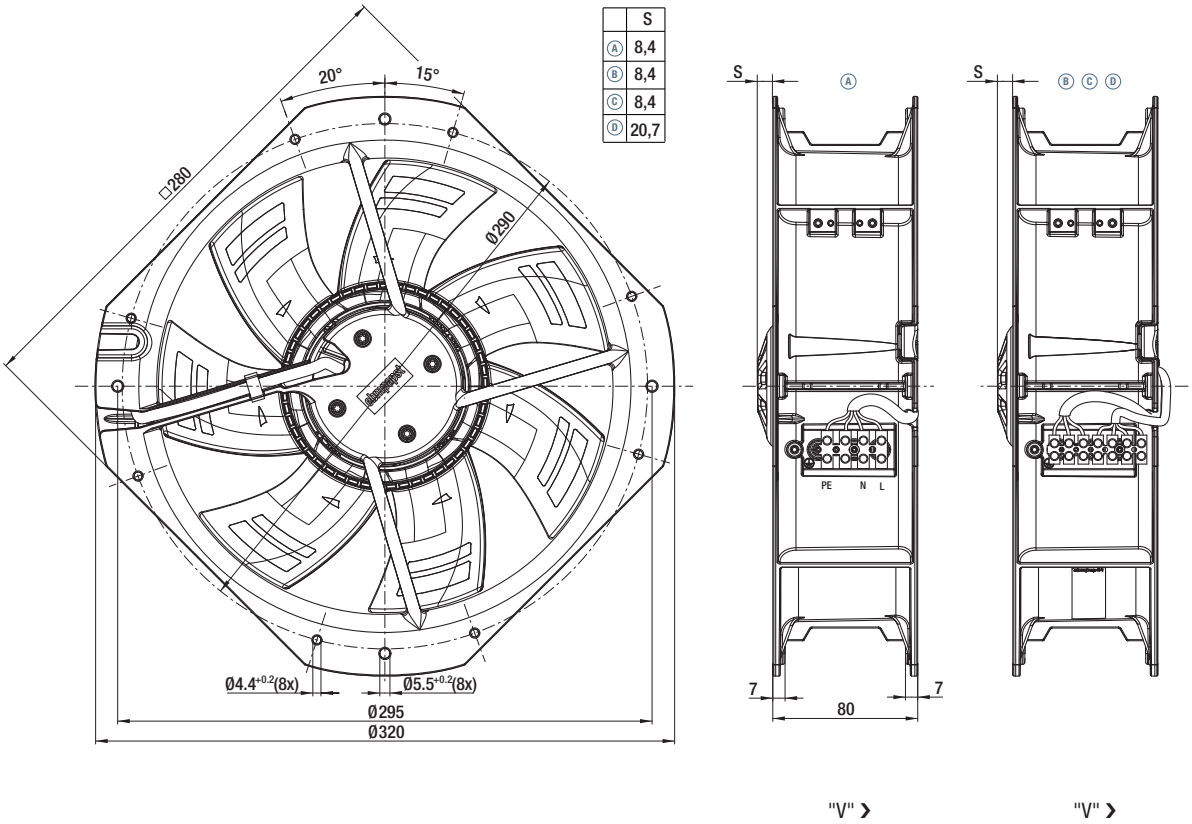

Max. 135 m³/h

ACmaxx in-line duct fan

Ø 98.5 x 130 mm

- **Material:** Housing: GRP[1)] (PBT)
  Impeller: GRP[1)] (PA)
- **Direction of air flow:** Intake over struts
- **Direction of rotation:** Clockwise, looking towards rotor
- **Connection:** Via 3-pin Europa terminal strip max. 1.5 mm²
- **Highlights:** Universally usable for all main voltages between 85 and 265 VAC, 50-60 Hz, Boost function
  Vibration-isolated motor
  Optional: new impeller for high pressure. Two speeds over jumper adjustable
- **Weight:** 400 g

- **Possible special versions:**
  (See chapter DC fans - specials)
  - Speed signal
  - PWM control input
  - Analog control input 0…10 VDC
  - Moisture protection
  - Degree of protection: IP 44 (IP45 possible depending on installation position)

1) Fiberglass-reinforced plastic

Series AC 100 **Nominal data**		Air flow	Air flow	**Nominal voltage**	**Frequency**	Voltage range	Sound pressure level	Sound power level	Sintec sleeve bearings / Ball bearings	Power consumption	Nominal speed	Temperature range	Service life L_{10} (40 °C) ebm-papst standard	Service life L_{10} (T_{max}) ebm-papst standard	Life expectancy L_{10IPC} (40 °C) see page 17	Curve
	Type high air flow	**m³/h**	**cfm**	**VAC**	**Hz**	**VAC**	**dB(A)**	**Bel(A)**	□/■	**Watts**	**rpm⁻¹**	**°C**	**Hours**	**Hours**		
Nominal boost	AC 100 MR	55 90	32 53	**115/230**	**50-60**	85...265	33 40	4.5 5.0	■	1.8 3.8	2 050 3 150	-10...+55	70 000 / 50 000	117 500	① ③
Nominal Boost	AC 100 NR	80 105	47 62	**115/230**	**50-60**	85...265	35 42	4.7 5.3	■	2.5 4.5	2 750 3 500	-10...+55	70 000 / 50 000	117 500	② ④
Max.	AC 100 HR*	135	79	**115/230**	**50-60**	85...265	tbd	tbd	■	7.0	4 500	-10...+55	tbd	tbd	⑤
	Type high pressure	**m³/h**	**cfm**	**VAC**	**Hz**	**VAC**	**dB(A)**	**Bel(A)**	□/■	**Watts**	**rpm⁻¹**	**°C**	**Hours**	**Hours**		
Nominal Boost	AC 100 MR*	40 62	23 36	**115/230**	**50-60**	85...265	31 38	4.2 4.7	■	tbd tbd	2 050* 3 150*	-10...+55	70 000 / 50 000	117 500	⑥ ⑧
Nominal Boost	AC 100 NR-017	53 66	31 39	**115/230**	**50-60**	85...265	33 40	4.4 5.0	■	2.8 3.5	2 680 3 300	-10...+55	70 000 / 50 000	117 500	⑦ ⑧

Subject to change

* on request

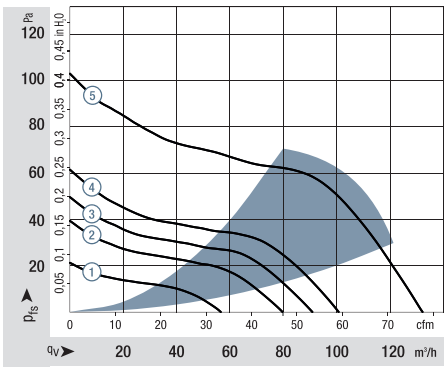

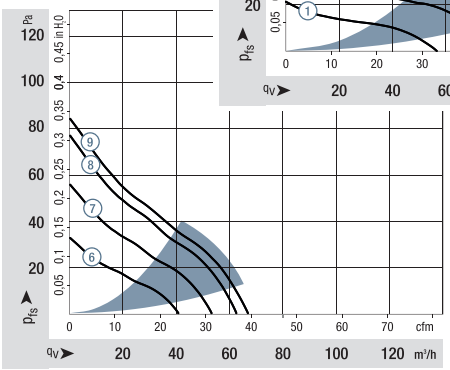

Impeller	Type	Boost off, Jumper low	Boost off, Jumper high	Boost on
High air flow	AC 100 MR	1 250	2 050	3 150
High air flow	AC 100 NR	2 200*	2 750	3 500
High pressure	AC 100 MR*	1 250*	2 050*	3 150*
High pressure	AC 100 NR-017	2 180	2 680	3 300

Air performance measured according to: ISO 5801.
Installation category A, without contact protection.
Noise: Total sound power level L_WA ISO 103002 measured on a hemisphere with a radius of 2 m.
Sound pressure level L_pA measured at 1 m distance from fan axis.
The values given are applicable only under the specified measuring conditions and may differ depending on the installation conditions.
In the event of deviation from the standard configuration, the parameters must be checked after installation!
For detailed information see http://www.ebmpapst.com/general conditions

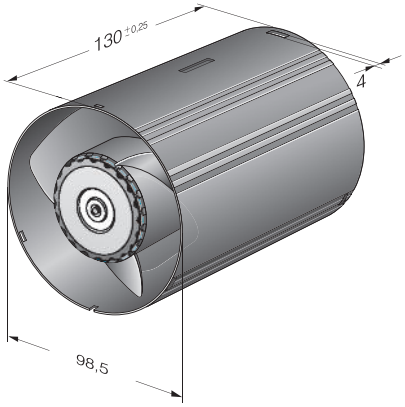

ebmpapst

Highest energy efficiency:	0.03 - 0.045 W/m³/h free air (specific fan power).
Boost speed:	2 speed settings possible via boost function.
Vibration isolation:	Reduced transmission of vibrations from motor to housing.
Intelligence:	Can be expanded to include set value requirement and signal outputs as an option.

Examples of connections

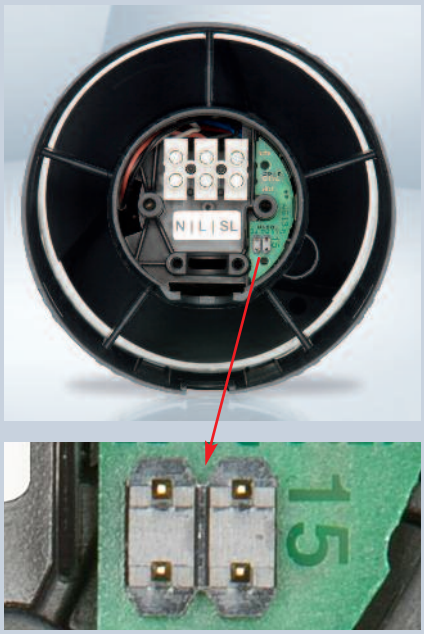

Jumper Low Jumper High

Example 1:
Nom speed endurance
Boost via light switch

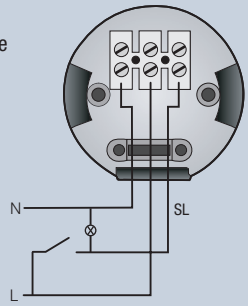

Example 2:
Nom speed via
light switch
Separate boost switch

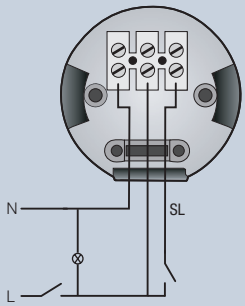

Example 3:
Simple connection
Nom speed without
switching

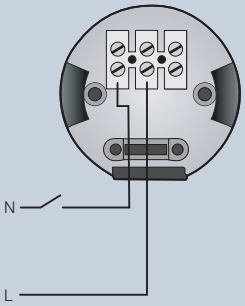

Example 4:
Simple connection
Boost without switching

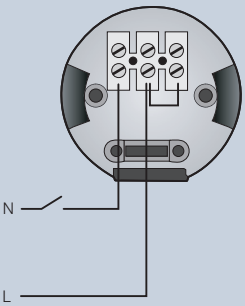

Scope of delivery

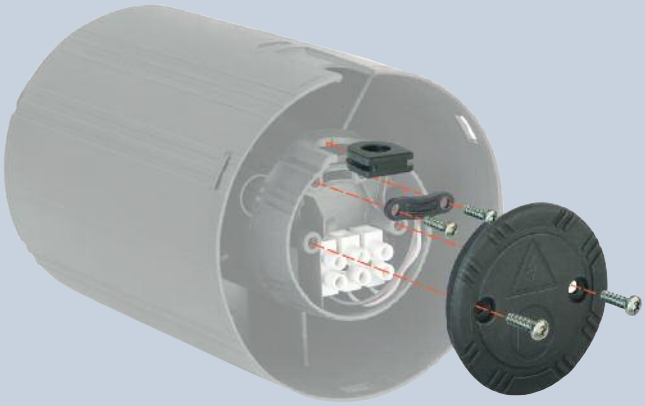

AC axial fans

AC axial fans

Technical information



Product line
The renowned ebm-papst AC fans are used when DC voltage is not available. The AC range of fans is based on experience gained from decades of development know-how, millions of units in series production, and the innovation competence of a world-wide technology pioneer.

In this catalog, we offer you the broad spectrum of our AC fans. In addition to complete systems, you will also find fans without external housing. They offer economic benefits whenever the air duct design can be integrated in the respective device.

Variety of sizes
AC fans are available in a variety of sizes with either air exhaust or air intake over struts. Silent running models with sleeve bearings. Electrical connection with plug connection or external exposed connection wires are available.

Shaded-pole or capacitor motors
Fan drives by shaded-pole or capacitor motors, most of which incorporate the world-famous ebm-papst external rotor principle. The fan blades are directly attached to the external rotor of the external rotor motor. This construction combining high performance with profitability.

Flat built AC fans
ebm-papst also has AC fans with a particularly flat construction and an internal rotor motor. Their advantage: quick start to full speed. A plastic impeller and the smaller and lighter internal rotor motor result in lower rotational inertia.

Bearings
AC fans with sleeve bearings are powered by Class E insulated motors. Fans with ball bearings are equipped with Class B, E, or F insulated motors.

Degree of protection
All ebm-papst fans conform to the requirements of IP 20. IP 54 / IP 65 and special degrees of protection are available on request.

AC voltage
The line of AC fans for Euro voltage according to IEC 60038 (230 V ± 10 %) is also available in 115 V.

Frequencies
AC fans can be operated at frequencies of 50 or 60 Hz. In this case, their technical data changes accordingly.

Capacitor
Fans driven by capacitor external motors provide particularly high operating efficiency. Generally, the required motor run capacitor is already integrated in the fan housing.

Overloading
Almost all AC fans are protected against overloading (e. g. due to locked rotor) – either impedance protected (marked "Impedance protected" or "Z. P.") or equipped with a thermal switch (marked "Thermally protected" or "Th. P."). The model designation of these fans ends with "S".

Axial fans for AC operation

Overview of air performance

Dimensions mm	Series	Air flow m³/h	Page
☐ 80 x 38	8000 N	30...61	206
Ø 76 x 37	8000 TV	24...47	207
☐ 92 x 25	3900	31...70	208
☐ 92 x 38	3000	49...89	209
☐ 119 x 25	9900	84...135	210
☐ 119 x 38	4000 N	80...180	211
☐ 119 x 38	4000 Z	100...180	212
Ø 108 x 37	4600 TZ	125...140	213
☐ 127 x 38	5900	150...206	214
☐ 135 x 38	5600	235...270	215
150 x 172 x 38	7000	320...380	216
Ø 150 x 55	7800	325...380	217
Ø 150 x 55	7400	380...425	218
Ø 172 x 51	6000	375...500	219
☐ 225 x 80	W2E 200	880...1030	220
☐ 280 x 80	W2E 250	1865	222
Ø 200	K2E 200	765...830	224
Ø 200	K2E 200	765...845	226
Ø 200	K2D 200	780...880	228

Subject to change

Overview of technically feasible designs

Dimensions mm	Series	VDE, UL, CSA	SINTEC sleeve bearings/ Ball bearings	Speed signal	Moisture protection IP >= 54	IP 65	Salt spray protection	Page
Axial fans								
				OPTIONAL				P.
☐ 80 x 38	8000 N	yes	▫/■	–	•	•	•	•	206
Ø 76 x 37	8000 TV	yes	▫/■	–	•	•	•	•	207
☐ 92 x 25	3900	yes	▫/■	–	•	–	–	–	208
☐ 92 x 38	3000	yes	▫/■	–	•	•	•	•	209
☐ 119 x 25	9900	yes	▫/■	–	•	–	–	–	210
☐ 119 x 38	4000 N	yes	▫/■	•	•	•	•	•	211
☐ 119 x 38	4000 Z	yes	▫/■	•	•	•	•	•	212
Ø 108 x 37	4600 TZ	yes	▫/■	–	•	•	•	•	213
☐ 127 x 38	5900	yes	▫/■	–	•	–	–	–	214
☐ 135 x 38	5600	yes	■	–	•	•	–	•	215
150 x 172 x 38	7000	yes	■	–	–	–	–	–	216
Ø 150 x 55	7800	yes	■	•	–	–	–	–	217
Ø 150 x 55	7400	yes	■	–	–	–	–	–	218
Ø 172 x 51	6000	yes	■	–	–	–	–	–	219

Subject to change

• available – not yet available ▫ Sleeve bearings ■ Ball bearings

Max. 61 m³/h

AC axial fans

☐ 80 x 38 mm

- **Material:** Housing: Die-cast aluminum
  Impeller: painted sheet steel
- **Direction of air flow:** Exhaust over struts
- **Direction of rotation:** Clockwise, looking towards rotor
- **Connection:** Via 2 single wires
  grounding lug for M4 x 8
- **Weight:** 490 g
- **Note:**
  Please note our new ACmaxx series.
  With identical mounting dimensions and voltages, this series achieves greater energy efficiency.
  See page 188.

- **Possible special versions:**
  (See page 12)
  - Moisture protection
  - Salt spray protection
  - Degree of protection: IP 54 / IP 65

Series 8000 N

Nominal data

Type	Air flow m³/h	Air flow cfm	Nominal voltage VAC	Frequency Hz	Sound pressure level dB(A)	Sound power level Bel(A)	Sintec sleeve bearings ☐ / Ball bearings ■	Power consumption Watts	Nominal speed rpm⁻¹	Temperature range °C	Service life L_{10} at 40 °C Hours	at T_{max} Hours	Curve
8880 N	30	17.7	**230**	**50**	18	3.3	☐	9.0	1 750	-10...+80	60 000	25 000	①
8850 N	37	21.8	**230**	**50**	24	3.9	☐	12.5	2 150	-10...+70	52 500	25 000	②
8550 N	50	29.4	**230**	**50**	30	4.4	☐	12.0	2 700	-10...+70	52 500	25 000	③
8556 N	50	29.4	**230**	**50**	31	4.5	■	12.0	2 800	-40...+90	52 500	15 000	③
8830 N	36	21.2	**115**	**60**	21	3.7	☐	8.0	1 950	-10...+80	62 500	25 000	④
8800 N	47	27.7	**115**	**60**	28	4.3	☐	11.0	2 500	-10...+70	55 000	27 500	⑤
8500 N	61	35.9	**115**	**60**	34	4.8	☐	11.0	3 200	-10...+75	55 000	25 000	⑥
8506 N	61	35.9	**115**	**60**	35	5.0	■	11.0	3 300	-40...+95	55 000	15 000	⑥

Subject to change

Fan type					Length "L"	Connection wires
8880 N	8830 N	8800 N	8550 N	8500 N	310 mm long	AWG 18, TR 64
8556 N	8506 N				310 mm long	AWG 22
8850 N					440 mm long	AWG 18, TR 64

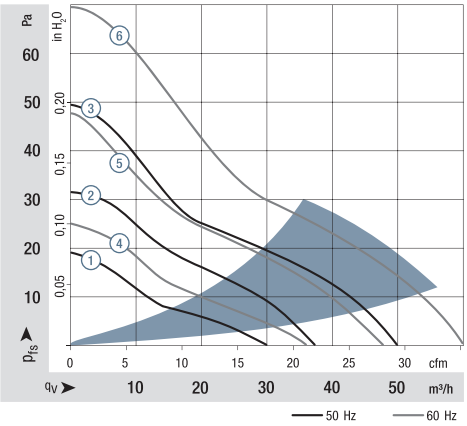

Air performance measured according to: ISO 5801.
Installation category A, without contact protection.
Noise: Total sound power level L_WA ISO 103002 measured on a hemisphere with a radius of 2 m.
Sound pressure level L_pA measured at 1 m distance from fan axis.
The values given are applicable only under the specified measuring conditions and may differ depending on the installation conditions.
In the event of deviation from the standard configuration, the parameters must be checked after installation!
For detailed information see
http://www.ebmpapst.com/general conditions

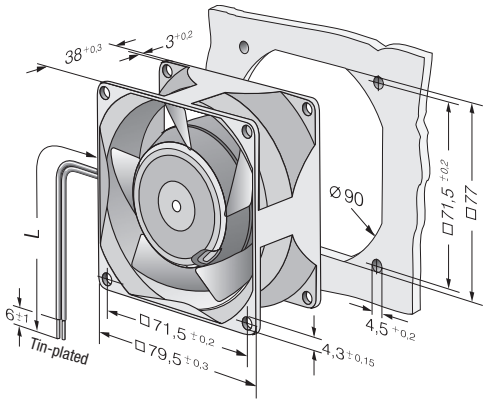

Finger guards
from p. 242

ebmpapst

Max. 47 m³/h

AC axial fans

Ø 76 x 37 mm

- **Material:** Impeller: Die-cast aluminum
  Mounting bracket: Metal
- **Direction of air flow:** Exhaust over mounting bracket
- **Direction of rotation:** Clockwise, looking towards rotor
- **Connection:** Via 2 single wires
- **Weight:** 370 g
- **Possible special versions:** (See page 12)
  - Moisture protection
  - Salt spray protection
  - Degree of protection: IP 54 / IP 65

Series 8000 TV **Nominal data**	Air flow	Air flow	**Nominal voltage**	**Frequency**	Sound pressure level	Sintec sleeve bearings / Ball bearings	Power consumption	Nominal speed	Temperature range	Service life L_{10} at 40 °C	at T_{max}
Type	**m³/h**	**cfm**	**VAC**	**Hz**	**dB(A)**	□ / ■	**Watts**	**rpm⁻¹**	**°C**	**Hours**	**Hours**
8880 TV	24	14.1	**230**	**50**	15	□	9.0	1 650	-10...+80	60 000 / 25 000	
8850 TV	31	18.2	**230**	**50**	20	□	12.0	2 100	-10...+70	52 500 / 25 000	
8550 TV	40	23.5	**230**	**50**	27	□	12.0	2 650	-10...+70	52 500 / 25 000	
8556 TV	40	23.5	**230**	**50**	28	■	12.0	2 750	-40...+90	52 500 / 15 000	
8830 TV	27	15.9	**115**	**60**	18	□	8.0	1 850	-10...+80	62 500 / 25 000	
8800 TV	36	21.2	**115**	**60**	24	□	11.0	2 450	-10...+70	55 000 / 27 500	
8500 TV	47	27.7	**115**	**60**	32	□	11.0	3 150	-10...+75	55 000 / 25 000	
8506 TV	47	27.7	**115**	**60**	33	■	11.0	3 250	-40...+95	55 000 / 15 000	

Subject to change

The air flow and sound level of fans without external housing depend on the installation conditions.
The stated air flow and noise have been measured with an orifice 76.5 mm Ø at a distance of approx. 17 mm from the mounting bracket.
The air flow capacity of fan series 8000 N is achievable because of the exceptionally favorable installation conditions. The noise in the optimal operating range can be measured for these fans only in a specific application.

Fan type				Length "L"	Connection wires
8880 TV	8850 TV	8830 TV	8800 TV	325 mm long	AWG 18, TR 64
8550 TV	8500 TV			325 mm long	AWG 18, TR 64
8556 TV	8506 TV			325 mm long	AWG 18

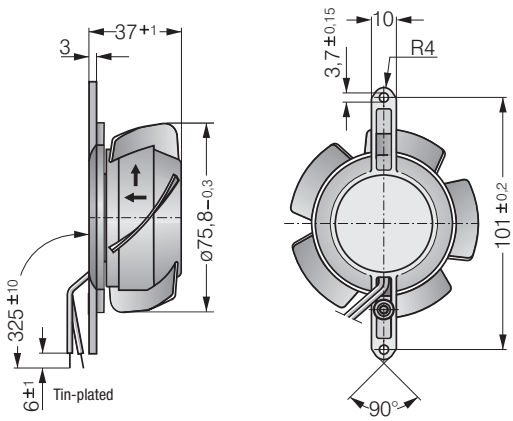

Max. 70 m³/h

AC axial fans

□ 92 x 25 mm

- **Material:** Housing: Die-cast aluminum
  Impeller: Mineral-reinforced PA plastic
- **Direction of air flow:** Exhaust over struts
- **Direction of rotation:** Counterclockwise, looking towards rotor
- **Connection:** Via 2 flat plugs 2.8 x 0.5 mm grounding lug for M4
- **Weight:** 280 g
- **Note:**
  Please note our new ACmaxx series.
  With identical mounting dimensions and voltages, this series achieves greater energy efficiency.
  See page 189.

- **Possible special versions:**
  (See page 12)
  - Moisture protection

Series 3900 **Nominal data**	Air flow	Air flow	**Nominal voltage**	**Frequency**	Sound pressure level	Sound power level	Sintec sleeve bearings Ball bearings	Power consumption	Nominal speed	Temperature range	Service life L_{10} at 40 °C	at T_{max}	Curve
Type	**m³/h**	**cfm**	**VAC**	**Hz**	**dB(A)**	**Bel(A)**	□/■	**Watts**	**rpm⁻¹**	**°C**	**Hours**	**Hours**	
3950 L	31	18.2	**230**	**50**	24	3.8	□	6.0	1 550	-10...+80	70 000 / 27 500		①
3956 L	31	18.2	**230**	**50**	24	3.8	■	6.0	1 550	-40...+80	70 000 / 27 500		①
3950 M	45	26.5	**230**	**50**	29	4.2	□	6.0	2 150	-10...+80	70 000 / 27 500		②
3956 M	45	26.5	**230**	**50**	29	4.2	■	6.0	2 150	-40...+80	70 000 / 27 500		②
3950	59	34.7	**230**	**50**	35	4.7	□	11.0	2 650	-20...+80	55 000 / 20 000		③
3956	59	34.7	**230**	**50**	35	4.7	■	11.0	2 650	-40...+80	55 000 / 20 000		③
3900 L	39	23.0	**115**	**60**	27	4.0	□	5.0	1 850	-10...+80	70 000 / 27 500		④
3906 L	39	23.0	**115**	**60**	27	4.0	■	5.0	1 850	-40...+80	70 000 / 27 500		④
3900 M	53	31.2	**115**	**60**	34	4.6	□	5.0	2 600	-10...+80	70 000 / 27 500		⑤
3906 M	53	31.2	**115**	**60**	34	4.6	■	5.0	2 600	-40...+80	70 000 / 27 500		⑤
3900	70	41.2	**115**	**60**	40	5.1	□	9.0	3 150	-20...+80	60 000 / 22 500		⑥
3906	70	41.2	**115**	**60**	40	5.1	■	9.0	3 150	-40...+80	60 000 / 22 500		⑥

Subject to change

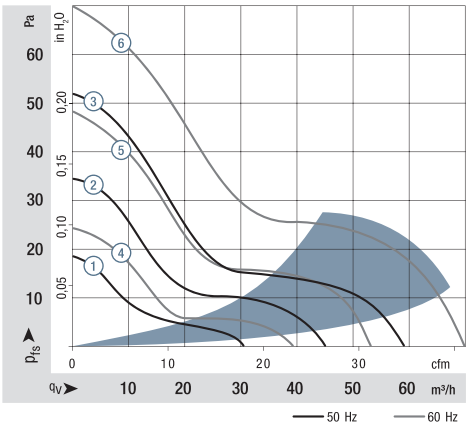

Air performance measured according to: ISO 5801.
Installation category A, without contact protection.
Noise: Total sound power level L_{WA} ISO 103002 measured on a hemisphere with a radius of 2 m.
Sound pressure level L_{pA} measured at 1 m distance from fan axis.
The values given are applicable only under the specified measuring conditions and may differ depending on the installation conditions.
In the event of deviation from the standard configuration, the parameters must be checked after installation!
For detailed information see
http://www.ebmpapst.com/general conditions

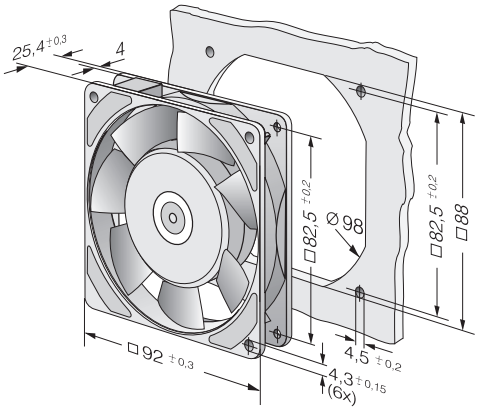

Max. 89 m³/h

AC axial fans

□ 92 x 38 mm

- **Material:** Housing: Die-cast aluminum
  Impeller: painted sheet steel
- **Direction of air flow:** Exhaust over struts
- **Direction of rotation:** Clockwise, looking towards rotor
- **Connection:** Via 2 single wires grounding lug for M4 x 8
- **Weight:** 420 g
- **Note:**
  Please note our new ACmaxx series.
  With identical mounting dimensions and voltages, this series achieves greater energy efficiency.
  See page 189.

- **Possible special versions:**
  (See page 12)
  - Moisture protection
  - Salt spray protection
  - Degree of protection: IP 54 / IP 65

Series 3000

Nominal data

Type	Air flow m³/h	Air flow cfm	Nominal voltage VAC	Frequency Hz	Sound pressure level dB(A)	Sound power level Bel(A)	Sintec sleeve bearings □ / Ball bearings ■	Power consumption Watts	Nominal speed rpm⁻¹	Temperature range °C	Service life L_{10} at 40 °C Hours	at T_{max} Hours	Curve
3850	49	28.8	**230**	**50**	24	3.7	□	9.0	1 750	-10...+75	60 000	27 500	①
3856	54	31.8	**230**	**50**	26	3.9	■	9.0	1 950	-40...+90	60 000	20 000	②
3550	67	39.4	**230**	**50**	32	4.4	□	8.5	2 300	-10...+80	60 000	25 000	③
3556	67	39.4	**230**	**50**	33	4.5	■	8.5	2 400	-40...+90	60 000	20 000	③
3650	75	44.1	**230**	**50**	36	4.8	□	12.0	2 650	-10...+55	52 500	37 500	④
3656	75	44.1	**230**	**50**	37	4.9	■	12.0	2 700	-40...+75	52 500	22 500	④
3800	54	31.8	**115**	**60**	26	3.9	□	8.0	1 900	-10...+80	62 500	25 000	⑤
3806	60	35.3	**115**	**60**	29	4.2	■	8.0	2 150	-40...+95	62 500	17 500	⑥
3500	73	43.0	**115**	**60**	35	4.6	□	8.0	2 500	-10...+80	62 500	25 000	⑦
3506	73	43.0	**115**	**60**	36	4.7	■	8.0	2 600	-40...+95	62 500	17 500	⑦
3600	89	52.4	**115**	**60**	41	5.1	□	11.0	3 100	-10...+65	55 000	30 000	⑧
3606	89	52.4	**115**	**60**	42	5.2	■	11.0	3 200	-40...+75	55 000	25 000	⑧

Subject to change

Fan type	Length "L"	Connection wires
With sleeve bearings	310 mm long	AWG 18, TR 64
With ball bearings	310 mm long	AWG 18

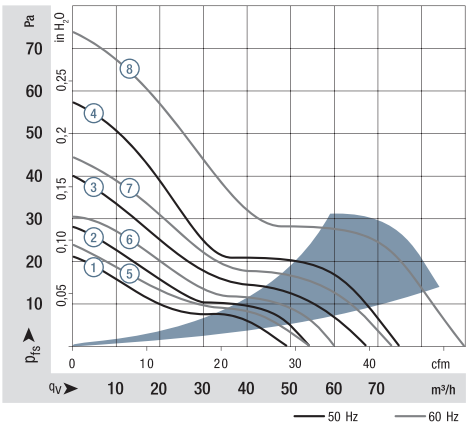

Air performance measured according to: ISO 5801.
Installation category A, without contact protection.
Noise: Total sound power level L_{WA} ISO 103002 measured on a hemisphere with a radius of 2 m.
Sound pressure level L_{pA} measured at 1 m distance from fan axis.
The values given are applicable only under the specified measuring conditions and may differ depending on the installation conditions.
In the event of deviation from the standard configuration, the parameters must be checked after installation!
For detailed information see http://www.ebmpapst.com/general conditions

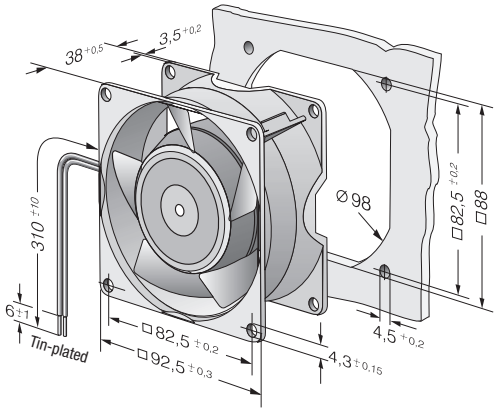

Max. 135 m³/h

AC axial fans

□ 119 x 25 mm

- **Material:** Housing: Die-cast aluminum
  Impeller: Mineral-reinforced PA plastic
- **Direction of air flow:** Exhaust over struts
- **Direction of rotation:** Counterclockwise, looking towards rotor
- **Connection:** Via 2 flat plugs 2.8 x 0.5 mm grounding lug for M4
- **Weight:** 320 g
- **Note:**
  Please note our new ACmaxx series.
  With identical mounting dimensions and voltages, this series achieves greater energy efficiency.
  See page 192.

- **Possible special versions:**
  (See page 12)
  - Moisture protection

Series 9900 **Nominal data**	Air flow	Air flow	**Nominal voltage**	**Frequency**	Sound pressure level	Sound power level	Sintec sleeve bearings / Ball bearings	Power consumption	Nominal speed	Temperature range	Service life L_{10} at 40 °C	at T_{max}	Curve
Type	**m³/h**	**cfm**	**VAC**	**Hz**	**dB(A)**	**Bel(A)**	□/■	**Watts**	**rpm⁻¹**	**°C**	**Hours**	**Hours**	
9956 L	84	49.4	**230**	**50**	29	4.4	■	9.5	1850	-40...+80	57 500	/ 22 500	①
9956 M	104	61.2	**230**	**50**	35	4.7	■	10.0	2250	-40...+80	57 500	/ 22 500	②
9950	117	68.9	**230**	**50**	37	5.0	□	14.0	2450	-20...+70	47 500	/ 22 500	③
9956	117	68.9	**230**	**50**	37	5.0	■	14.0	2450	-40...+70	47 500	/ 22 500	③
9906 L	100	58.9	**115**	**60**	34	4.6	■	8.0	2100	-40...+80	62 500	/ 25 000	④
9906 M	111	65.3	**115**	**60**	37	5.0	■	8.0	2450	-40...+80	62 500	/ 25 000	⑤
9900	135	79.5	**115**	**60**	42	5.4	□	12.0	2850	-20...+70	52 500	/ 25 000	⑥
9906	135	79.5	**115**	**60**	42	5.4	■	12.0	2850	-40...+70	52 500	/ 25 000	⑥

Subject to change

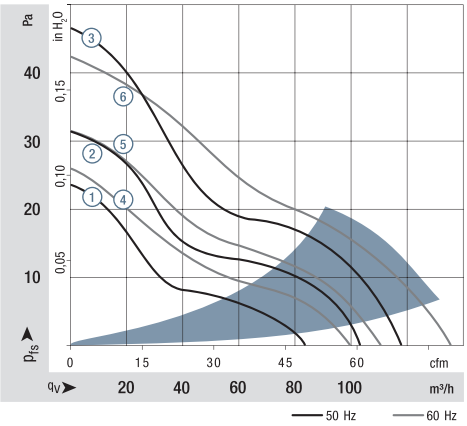

Air performance measured according to: ISO 5801.
Installation category A, without contact protection.
Noise: Total sound power level L_WA ISO 103002 measured on a hemisphere with a radius of 2 m.
Sound pressure level L_pA measured at 1 m distance from fan axis.
The values given are applicable only under the specified measuring conditions and may differ depending on the installation conditions.
In the event of deviation from the standard configuration, the parameters must be checked after installation!
For detailed information see http://www.ebmpapst.com/general conditions

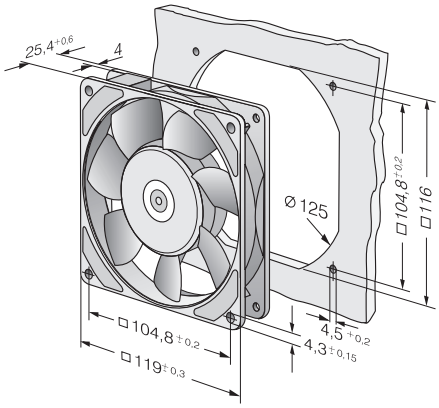

ebmpapst

Max. 180 m³/h

AC axial fans

□ 119 x 38 mm

- **Material:** Housing: Die-cast aluminum
  Impeller: painted sheet steel
- **Direction of air flow:** Intake over struts
  Types 4890 N and 4840 N
  Exhaust over struts
- **Direction of rotation:** Clockwise,
  looking towards rotor
- **Connection:** Via 2 flat plugs 2.8 x 0.5 mm
  grounding lug for M4
- **Weight:** 550 g
- **Note:**
  Please note our new ACmaxx series. With identical mounting dimensions and voltages, this series achieves greater energy efficiency. See page 192.

- **Available as an option:**
  Versions with reinforced mounting flanges and exposed external single wires.
- **Possible special versions:**
  (See page 12)
  - Speed signal
  - Moisture protection
  - Salt spray protection
  - Degree of protection: IP 54 / IP 65

Series 4000 N **Nominal data**	Air flow	Air flow	**Nominal voltage**	**Frequency**	Sound pressure level	Sound power level	Sintec sleeve bearings Ball bearings	Power consumption	Nominal speed	Temperature range	Service life L_{10} at 40 °C	at T_{max}	Curve
Type	**m³/h**	**cfm**	**VAC**	**Hz**	**dB(A)**	**Bel(A)**	**□ / ■**	**Watts**	**rpm⁻¹**	**°C**	**Hours**	**Hours**	
4890 N	80	47.0	**230**	**50**	25	4.0	□	11.0	1 550	-10...+70	55 000 / 27 500		①
4850 N*	100	58.8	**230**	**50**	32	4.4	□	10.0	1 800	-10...+70	57 500 / 27 500		②
4580 N*	123	72.3	**230**	**50**	41	5.2	□	18.0	2 350	-10...+55	40 000 / 27 500		③
4550 N*	145	85.2	**230**	**50**	44	5.4	□	16.5	2 550	-10...+55	42 500 / 30 000		④
4650 N	160	94.1	**230**	**50**	46	5.4	□	19.0	2 650	-10...+55	37 500 / 27 500		⑤
4656 N	160	94.1	**230**	**50**	47	5.5	■	19.0	2 650	-40...+85	37 500 / 15 000		⑤
4840 N	85	50.0	**115**	**60**	26	4.1	□	10.0	1 650	-10...+75	57 500 / 25 000		⑥
4800 N*	97	57.0	**115**	**60**	32	4.3	□	9.0	1 750	-10...+75	60 000 / 27 500		⑦
4530 N*	151	88.8	**115**	**60**	45	5.4	□	16.0	2 700	-10...+65	42 500 / 25 000		⑧
4500 N*	169	100	**115**	**60**	48	5.7	□	15.0	3 000	-10...+65	47 500 / 25 000		⑨
4600 N	180	106	**115**	**60**	50	5.7	□	18.0	3 100	-10...+60	40 000 / 25 000		⑩
4606 N	180	106	**115**	**60**	51	5.8	■	18.0	3 100	-40...+90	40 000 / 15 000		⑩

Subject to change

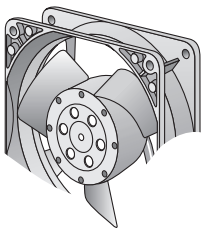

* Fan with 3 blades.

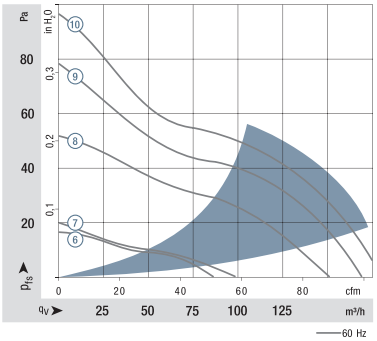

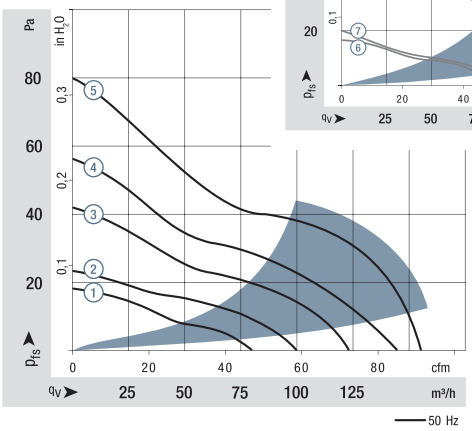

Air performance measured according to: ISO 5801.
Installation category A, without contact protection.
Noise: Total sound power level L_WA ISO 103002 measured on a hemisphere with a radius of 2 m.
Sound pressure level L_pA measured at 1 m distance from fan axis.
The values given are applicable only under the specified measuring conditions and may differ depending on the installation conditions.
In the event of deviation from the standard configuration, the parameters must be checked after installation!
For detailed information see
http://www.ebmpapst.com/general conditions

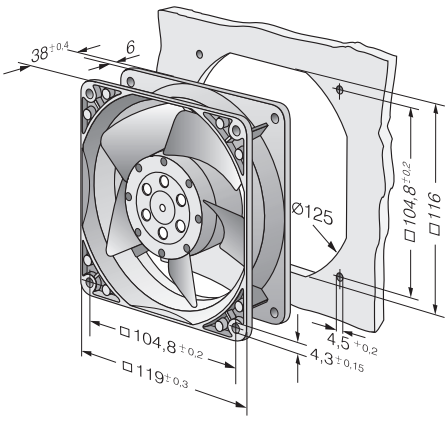

Max. 180 m³/h

AC axial fans

□ 119 x 38 mm

- **Material:** Housing: Die-cast aluminum
  Impeller: painted sheet steel
- **Direction of air flow:** Exhaust over struts
- **Direction of rotation:** Clockwise, looking towards rotor
- **Connection:** Via 2 flat plugs 2.8 x 0.5 mm
  grounding lug for M4 x 8
- **Weight:** 540 g
- **Note:**
  Please note our new ACmaxx series.
  With identical mounting dimensions and voltages, this series achieves greater energy efficiency.
  See page 192.

- **Possible special versions:**
  (See page 12)
  - Speed signal
  - Moisture protection
  - Salt spray protection
  - Degree of protection: IP 54 / IP 65

Series 4000 Z

Nominal data	Air flow	Air flow	Nominal voltage	Frequency	Sound pressure level	Sound power level	Sintec sleeve bearings / Ball bearings	Power consumption	Nominal speed	Temperature range	Service life L_{10} at 40 °C	at T_{max}	Curve
Type	**m³/h**	**cfm**	**VAC**	**Hz**	**dB(A)**	**Bel(A)**	□ / ■	**Watts**	**rpm⁻¹**	**°C**	**Hours**	**Hours**	
4850 Z	100	58.8	**230**	**50**	26	4.0	□	13.0	1 700	-10...+65	50 000	27 500	①
4856 Z	100	58.8	**230**	**50**	26	4.0	■	13.0	1 700	-40...+75	50 000	20 000	①
4580 Z	115	67.6	**230**	**50**	30	4.3	□	13.0	1 900	-10...+65	50 000	27 500	②
4586 Z	115	67.6	**230**	**50**	30	4.3	■	13.0	1 900	-40...+75	50 000	20 000	②
4650 Z	160	94.1	**230**	**50**	40	5.3	□	19.0	2 650	-10...+50	37 500	30 000	③
4656 Z	160	94.1	**230**	**50**	40	5.3	■	19.0	2 650	-40...+75	37 500	17 500	③
4800 Z	105	61.7	**115**	**60**	28	4.1	□	12.0	1 800	-10...+70	52 500	25 000	④
4806 Z	105	61.7	**115**	**60**	28	4.1	■	12.0	1 800	-40...+75	52 500	17 500	④
4530 Z	120	70.5	**115**	**60**	32	4.4	□	12.0	2 000	-10...+70	52 500	25 000	⑤
4536 Z	120	70.5	**115**	**60**	32	4.4	■	12.0	2 000	-40...+75	52 500	17 500	⑤
4600 Z	180	106	**115**	**60**	45	5.6	□	18.0	3 100	-10...+60	40 000	25 000	⑥
4606 Z	180	106	**115**	**60**	45	5.6	■	18.0	3 100	-40...+85	40 000	15 000	⑥

Subject to change

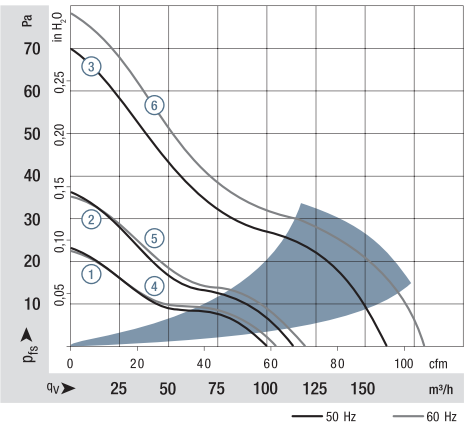

Air performance measured according to: ISO 5801.
Installation category A, without contact protection.
Noise: Total sound power level L_{WA} ISO 103002 measured on a hemisphere with a radius of 2 m.
Sound pressure level L_{pA} measured at 1 m distance from fan axis.
The values given are applicable only under the specified measuring conditions and may differ depending on the installation conditions.
In the event of deviation from the standard configuration, the parameters must be checked after installation!
For detailed information see
http://www.ebmpapst.com/general conditions

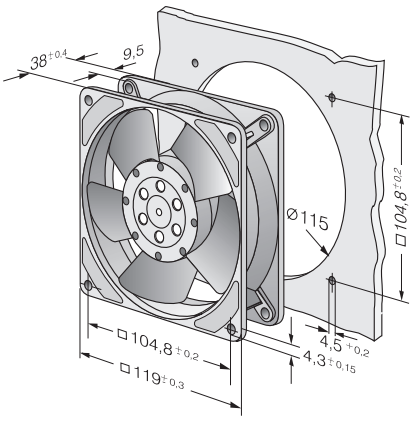

Max. 140 m³/h

AC axial fans

Ø 108 x 37 mm

- **Material:** Impeller: Die-cast aluminum
  Mounting bracket: Metal
- **Direction of air flow:** Exhaust over mounting bracket
- **Direction of rotation:** Clockwise, looking towards rotor
- **Connection:** Via 2 single wires
- **Weight:** 430 g

- **Possible special versions:**
  (See page 12)
  - Moisture protection
  - Salt spray protection
  - Degree of protection: IP 54 / IP 65

Series 4600 TZ **Nominal data**	Air flow	Air flow	**Nominal voltage**	**Frequency**	Sound pressure level	Sintec sleeve bearings / Ball bearings	Power consumption	Nominal speed	Temperature range	Service life L_{10} at 40 °C	at T_{max}
Type	**m³/h**	**cfm**	**VAC**	**Hz**	**dB(A)**	□ / ■	**Watts**	**rpm⁻¹**	**°C**	**Hours**	**Hours**
4650 TZ	125	73.6	**230**	**50**	42	□	19.0	2 600	-10...+50	37 500	30 000
4656 TZ	125	73.6	**230**	**50**	42	■	19.0	2 600	-40...+65	37 500	20 000
4600 TZ	140	82.4	**115**	**60**	45	□	18.0	2 950	-10...+50	40 000	32 500
4606 TZ	140	82.4	**115**	**60**	45	■	18.0	2 950	-40...+75	40 000	17 500

Subject to change

The air flow and sound level of fans without external housing depends on the installation conditions.
The stated air flow and noise have been measured with an orifice 109 mm Ø at a distance of approx. 17 mm from the mounting bracket.
The air flow capacity of fan series 4000 Z is achievable because of the exceptionally favorable installation conditions. The noise in the optimal operating range can be measured for these fans only in a specific application.

Fan type		Connection wires
4650 TZ	4600 TZ	AWG 22, TR 32
4656 TZ	4606 TZ	AWG 18

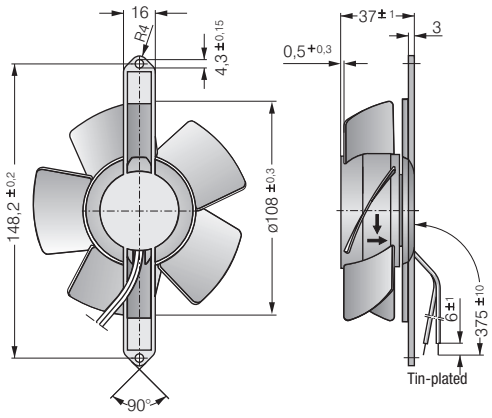

Max. 206 m³/h

AC axial fans

□ 127 x 38 mm

- **Material:** Housing: Die-cast aluminum
  Impeller: GRP[1)] (PA)
- **Direction of air flow:** Exhaust over struts
- **Direction of rotation:** Counterclockwise, looking towards rotor
- **Connection:** Via 2 flat plugs 2.8 x 0.8 mm grounding lug for M4 x 6
- **Weight:** 570 g

- **Possible special versions:**
  (See page 12)
  - Moisture protection

1) Fiberglass-reinforced plastic

Series 5900

Nominal data

Type	Air flow m³/h	Air flow cfm	Nominal voltage VAC	Frequency Hz	Sound pressure level dB(A)	Sound power level Bel(A)	Sintec sleeve bearings □ / Ball bearings ■	Power consumption Watts	Nominal speed rpm⁻¹	Temperature range °C	Service life L_{10} at 40 °C Hours	at T_{max} Hours	Curve
5988	150	88.2	**230**	**50**	37	4.9	■	13.0	2 250	-30...+55	35 000	20 000	①
5950	180	106	**230**	**50**	43	5.4	□	18.0	2 700	-20...+50	40 000	32 500	③
5958	180	106	**230**	**50**	44	5.5	■	18.0	2 750	-30...+60	40 000	25 000	③
5938	162	95.2	**115**	**60**	40	4.9	■	12.0	2 500	-30...+55	35 000	20 000	②
5900	206	121	**115**	**60**	46	5.7	□	17.0	3 050	-20...+55	42 500	30 000	④
5908	206	121	**115**	**60**	47	5.8	■	17.0	3 100	-30...+75	42 500	20 000	④

Subject to change

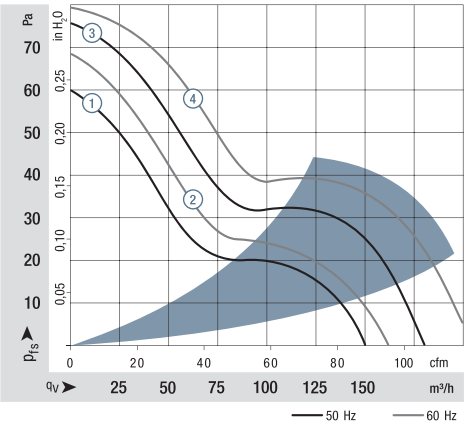

Air performance measured according to: ISO 5801.
Installation category A, without contact protection.
Noise: Total sound power level L_WA ISO 103002 measured on a hemisphere with a radius of 2 m.
Sound pressure level L_pA measured at 1 m distance from fan axis.
The values given are applicable only under the specified measuring conditions and may differ depending on the installation conditions.
In the event of deviation from the standard configuration, the parameters must be checked after installation!
For detailed information see http://www.ebmpapst.com/general conditions

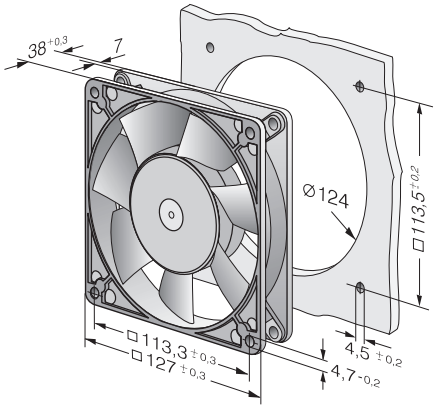

Max. 270 m³/h

AC axial fans

☐ 135 x 38 mm

- **Material:** Housing: Die-cast aluminum
  Impeller: painted sheet steel
- **Direction of air flow:** Exhaust over struts
- **Direction of rotation:** Counterclockwise, looking towards rotor
- **Connection:** Via 2 flat plugs 2.8 x 0.5 mm
  grounding lug for M4 x 8
- **Weight:** 800 g

- **Possible special versions:**
  (See page 12)
  - Moisture protection
  - Salt spray protection
  - Degree of protection: IP 54

Series 5600

Nominal data	Air flow	Air flow	**Nominal voltage**	**Frequency**	Sound pressure level	Sound power level	Sintec sleeve bearings / Ball bearings	Power consumption	Nominal speed	Temperature range	Service life L_{10} at 40 °C	at T_{max}	Curve
Type	**m³/h**	**cfm**	**VAC**	**Hz**	**dB(A)**	**Bel(A)**	**☐ / ■**	**Watts**	**rpm⁻¹**	**°C**	**Hours**	**Hours**	
5656 S	235	138	**230**	**50**	46	5.9	■	30.0	2 700	-35...+70	45 000 / 20 000		①
5606 S	270	159	**115**	**60**	50	6.2	■	26.0	3 100	-35...+80	47 500 / 20 000		②

Subject to change

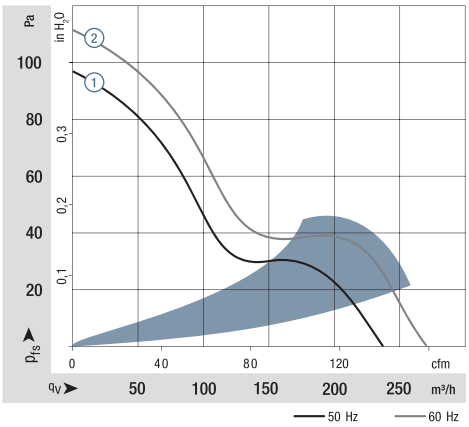

Air performance measured according to: ISO 5801.
Installation category A, without contact protection.
Noise: Total sound power level L_{WA} ISO 103002 measured on a hemisphere with a radius of 2 m.
Sound pressure level L_{pA} measured at 1 m distance from fan axis.
The values given are applicable only under the specified measuring conditions and may differ depending on the installation conditions.
In the event of deviation from the standard configuration, the parameters must be checked after installation!
For detailed information see
http://www.ebmpapst.com/general conditions

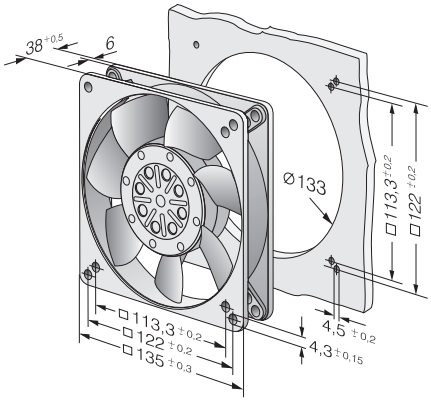

Max. 380 m³/h

AC axial fans

150 x 172 x 38 mm

- **Material:** Housing: Die-cast aluminum
  Impeller: painted sheet steel
- **Direction of air flow:** Exhaust over struts
- **Direction of rotation:** Counterclockwise, looking towards rotor
- **Connection:** Via 2 flat plugs 2.8 x 0.5 mm
  grounding lug for M4 x 8
- **Weight:** 900 g
- **Note:**
  Please note our new ACmaxx series.
  With identical mounting dimensions and voltages, this series achieves greater energy efficiency.
  See pages 194, 196, and 198.

Series 7000 **Nominal data**	Air flow	Air flow	**Nominal voltage**	**Frequency**	Sound pressure level	Sound power level	Sintec sleeve bearings Ball bearings	Power consumption	Nominal speed	Temperature range	Service life L_{10} at 40 °C	at T_{max}	Curve
Type	**m³/h**	**cfm**	**VAC**	**Hz**	**dB(A)**	**Bel(A)**	□/■	**Watts**	**rpm⁻¹**	**°C**	**Hours**	**Hours**	
7056 ES	320	188	**230**	**50**	51	6.4	■	27.0	2 800	-25...+55	60 000 / 32 000		①
7006 ES	380	224	**115**	**60**	56	6.8	■	28.0	3 350	-25...+65	55 000 / 18 000		②

Subject to change

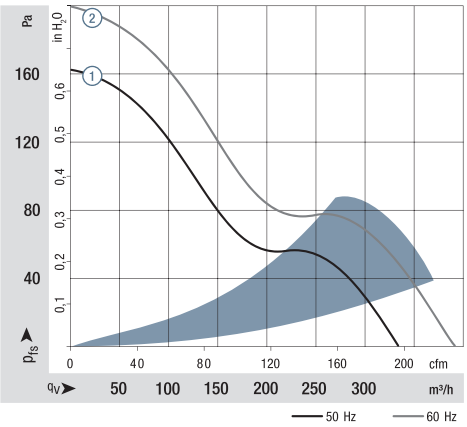

Air performance measured according to: ISO 5801.
Installation category A, without contact protection.
Noise: Total sound power level L_{WA} ISO 103002 measured on a hemisphere with a radius of 2 m.
Sound pressure level L_{pA} measured at 1 m distance from fan axis.
The values given are applicable only under the specified measuring conditions and may differ depending on the installation conditions.
In the event of deviation from the standard configuration, the parametersmust be checked after installation!
For detailed information see
http://www.ebmpapst.com/general conditions

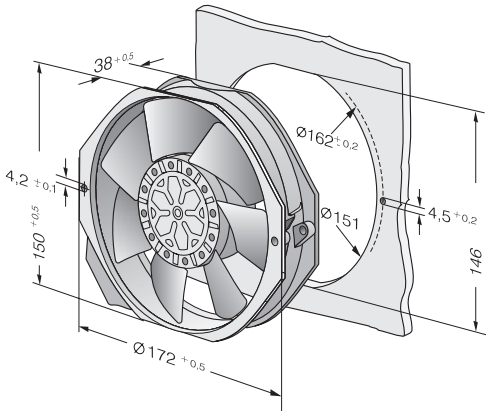

Max. 380 m³/h

AC axial fans

Ø 150 x 55 mm

- **Material:** Housing: Die-cast aluminum
  Impeller: painted sheet steel
- **Direction of air flow:** Exhaust over struts
- **Direction of rotation:** Counterclockwise, looking towards rotor
- **Connection:** Via 2 single wires
  wire ends with wire end splices
  grounding lug for M4 x 8
- **Weight:** 1.1 kg
- **Note:**
  Please note our new ACmaxx series.
  With identical mounting dimensions and voltages, this series achieves greater energy efficiency. See page 194.

Series 7800

Nominal data	Air flow	Air flow	Nominal voltage	Frequency	Sound pressure level	Sound power level	Sintec sleeve bearings / Ball bearings	Power consumption	Nominal speed	Temperature range	Service life L_{10} at 40 °C	at T_{max}	Curve
Type	**m³/h**	**cfm**	**VAC**	**Hz**	**dB(A)**	**Bel(A)**	□ / ■	**Watts**	**rpm⁻¹**	**°C**	**Hours**	**Hours**	
7855 ES	325	191	**230**	**50**	49	6.0	■	45.0	2 800	-25...+50	60 000 / 47 500		①
7856 ES	325	191	**230**	**50**	49	6.0	■	45.0	2 800	-25...+70	60 000 / 30 000		①
7805 ES	380	224	**115**	**60**	53	6.4	■	38.0	3 250	-25...+70	60 000 / 47 500		②
7806 ES	380	224	**115**	**60**	53	6.4	■	38.0	3 250	-25...+90	60 000 / 15 000		②

Subject to change

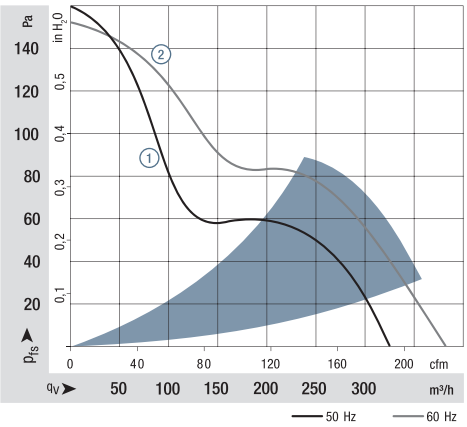

Air performance measured according to: ISO 5801.
Installation category A, without contact protection.
Noise: Total sound power level L_{WA} ISO 103002 measured on a hemisphere with a radius of 2 m.
Sound pressure level L_{pA} measured at 1 m distance from fan axis.
The values given are applicable only under the specified measuring conditions and may differ depending on the installation conditions.
In the event of deviation from the standard configuration, the parameters must be checked after installation!
For detailed information see
http://www.ebmpapst.com/general conditions

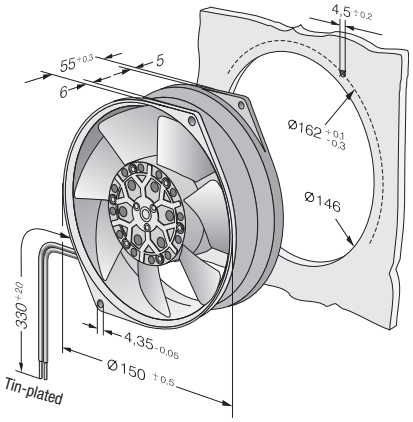

Max. 425 m³/h

AC axial fans

Ø 150 x 55 mm

- **Material:** Housing: Die-cast aluminum
  Impeller: painted sheet steel
- **Direction of air flow:** Intake over struts
- **Direction of rotation:** Counterclockwise, looking towards rotor
- **Connection:** Via 2 single wires
  wire ends with wire end splices
  grounding lug for M4 x 8
- **Weight:** 1.1 kg
- **Note:**
  Please note our new ACmaxx series.
  With identical mounting dimensions and voltages,
  this series achieves greater energy efficiency.
  See page 194.

Series 7400

Nominal data	Air flow	Air flow	**Nominal voltage**	**Frequency**	Sound pressure level	Sound power level	Sintec sleeve bearings / Ball bearings	Power consumption	Nominal speed	Temperature range	Service life L_{10} at 40 °C	at T_{max}	Curve
Type	**m³/h**	**cfm**	**VAC**	**Hz**	**dB(A)**	**Bel(A)**	□/■	**Watts**	**rpm⁻¹**	**°C**	**Hours**	**Hours**	
7450 ES	380	224	**230**	**50**	60	6.8	■	47.0	2 700	-25...+50	63 000 / 50 000		①
7400 ES	425	250	**115**	**60**	62	6.9	■	46.0	3 050	-25...+70	50 000 / 24 000		②

Subject to change

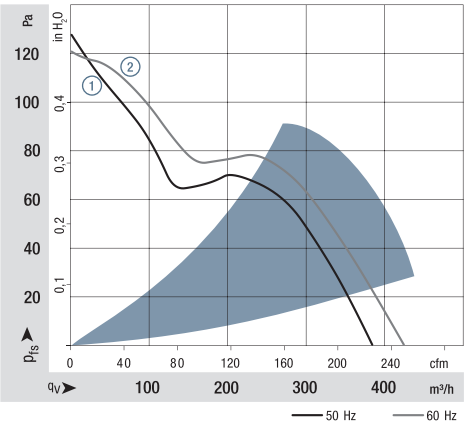

Air performance measured according to: ISO 5801.
Installation category A, without contact protection.
Noise: Total sound power level L_WA ISO 103002 measured on a hemisphere with a radius of 2 m.
Sound pressure level L_pA measured at 1 m distance from fan axis.
The values given are applicable only under the specified measuring conditions and may differ depending on the installation conditions.
In the event of deviation from the standard configuration, the parameters must be checked after installation!
For detailed information see
http://www.ebmpapst.com/general conditions

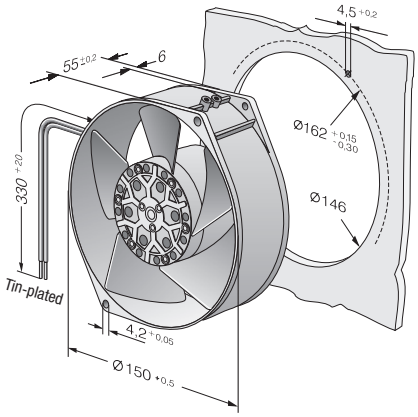

Max. 500 m³/h

AC axial fans

Ø 172 x 51 mm

- **Material:** Housing: Die-cast aluminum
  Impeller: painted sheet steel
- **Direction of air flow:** Exhaust over struts
- **Direction of rotation:** Counterclockwise, looking towards rotor
- **Connection:** Via 2 flat plugs 2.8 x 0.5 mm
  grounding lug for M4 x 6
- **Weight:** 1.0 kg
- **Note:**
  Please note our new ACmaxx series.
  With identical mounting dimensions and voltages, this series achieves greater energy efficiency.
  See pages 196 and198.

Series 6000 **Nominal data**	Air flow	Air flow	**Nominal voltage**	**Frequency**	Sound pressure level	Sound power level	Sintec sleeve bearings Ball bearings	Power consumption	Nominal speed	Temperature range	Service life L_{10} at 40 °C	at T_{max}	Curve
Type	**m³/h**	**cfm**	**VAC**	**Hz**	**dB(A)**	**Bel(A)**	□/■	**Watts**	**rpm⁻¹**	**°C**	**Hours**	**Hours**	
6058 ES	375	221	**230**	**50**	55	5.9	■	24.0	2 800	-25...+70	62 000 / 31 000		①
6078 ES	420	247	**230**	**50**	54	6.3	■	26.0	2 800	-25...+60	62 000 / 39 000		②
6008 ES	440	259	**115**	**60**	60	6.4	■	26.0	3 300	-25...+70	57 000 / 28 000		③
6028 ES	500	284	**115**	**60**	58	6.7	■	29.0	3 300	-25...+75	57 000 / 22 000		④

Subject to change

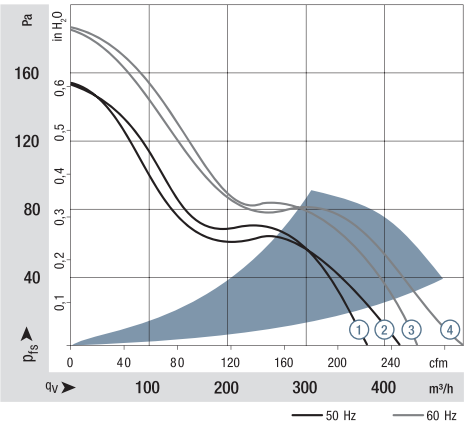

Air performance measured according to: ISO 5801.
Installation category A, without contact protection.
Noise: Total sound power level L_{WA} ISO 103002 measured on a hemisphere with a radius of 2 m.
Sound pressure level L_{pA} measured at 1 m distance from fan axis.
The values given are applicable only under the specified measuring conditions and may differ depending on the installation conditions.
In the event of deviation from the standard configuration, the parameters must be checked after installation!
For detailed information see
http://www.ebmpapst.com/general conditions

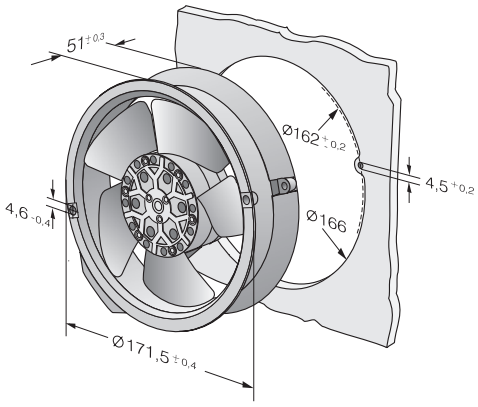

Max. 1000 m³/h

AC axial fans

☐ 225 x 80 mm

- **Material:** Housing: Die-cast-aluminum
  Impeller: Sheet steel, painted black
  Rotor: Painted black
- **Number of blades:** 7
- **Direction of air flow:** "V"
- **Direction of rotation:** Counterclockwise, looking towards rotor
- **Degree of protection:** IP 44, depending on installation and position
- **Insulation class:** "B"
- **Installation position:** Any
- **Condensation drainage holes:** None
- **Mode of operation:** Continuous operation (S1)
- **Bearings:** Maintenance-free ball bearings

Nominal data

Type	Motor	Curve	Nominal voltage VAC	Frequency Hz	Air flow m³/h	Nominal speed rpm⁻¹	Power consumption W	Input current A	Capacitor F/VDB	Sound power level dB(A)	Max. back-pressure Pa	Admissible amb. temp. °C	Weight kg	Connection diagram
W2E 200-HK86-01	M2E 068-BF	A	1~115	50	880	2550	64	0.58	5.0/220	—-	80	-25...+60	2.0	P. 263 / A1)
		B	1~115	60	1000	2800	80	0.70	5.0/220	—-	95	-25...+65	2.0	
W2E 200-HK38-01	M2E 068-BF	C	1~230	50	880	2550	64	0.29	1.5/450	—-	80	-25...+60	2.1	P. 263 / A1)
		D	1~230	60	1000	2800	80	0.35	1.5/450	—-	95	-25...+65	2.1	

Subject to change

Curves:

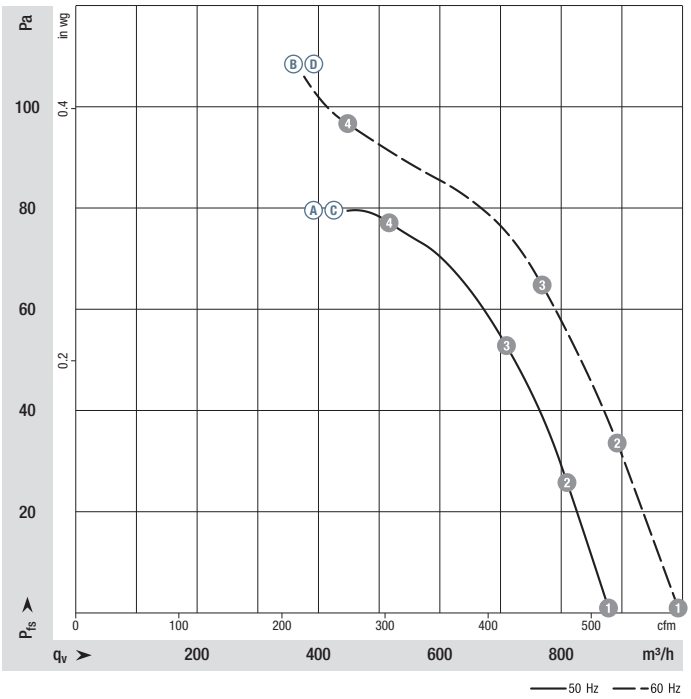

		n rpm⁻¹	P_{ed} W	I A	L_WA dB(A)
A	1	2640	56	0.56	—-
A	2	2595	58	0.57	—-
A	3	2550	61	0.58	—-
A	4	2480	64	0.60	—-
B	1	2980	67	0.58	—-
B	2	2880	71	0.62	—-
B	3	2790	75	0.65	—-
B	4	2660	80	0.69	—-
C	1	2630	60	0.30	—-
C	2	2585	64	0.31	—-
C	3	2530	66	0.31	—-
C	4	2480	69	0.32	—-
D	1	3000	70	0.31	—-
D	2	2935	73	0.32	—-
D	3	2850	77	0.34	—-
D	4	2705	83	0.36	—-

Air performance measured according to: ISO 5801, Installation category A. For detailed information on the measurement setup, contact ebmpapst. Suction-side noise levels: L_WA according to ISO 13347, L_pA measured at 1 m distance from fan axis. The values given are applicable only under the specified measuring conditions and may differ depending on the installation conditions. In the event of deviation from the standard configuration, the parameters must be checked after installation! For detailed information see http://www.ebmpapst.com/general conditions

ebmpapst

- **Motor protection:** Thermal overload protector (TOP) connected internally
- **Touch current:** < 0.75 mA acc. to IEC 60990 (test circuit, illustration 4)
- **Cable exit:** Variable
- **Electrical hookup:** Via terminal strips, capacitor connected
- **Protection class:** I (with customer connection to grounding conductor)
- **Conformity with standard(s):** EN 60335-1, CE
- **Approvals:** Ⓐ Ⓑ EAC, UL 507, VDE, CSA C22.2 no. 113, CCC
  Ⓒ Ⓓ EAC, UL 2111, VDE, CSA C22.2 no. 113, CCC

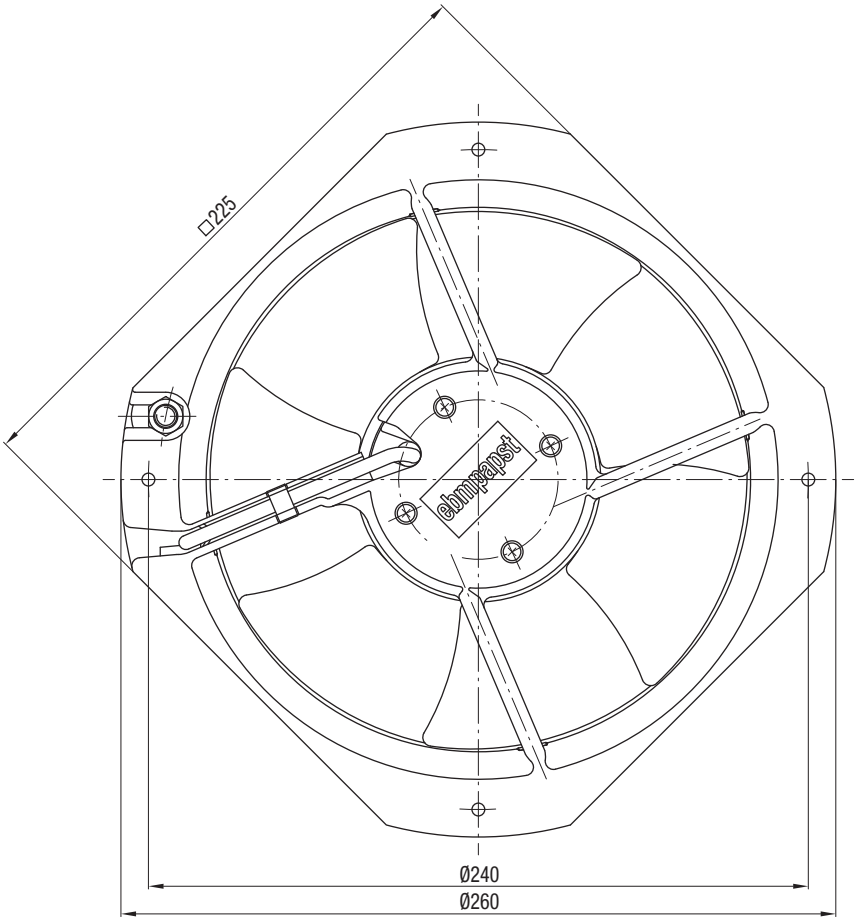

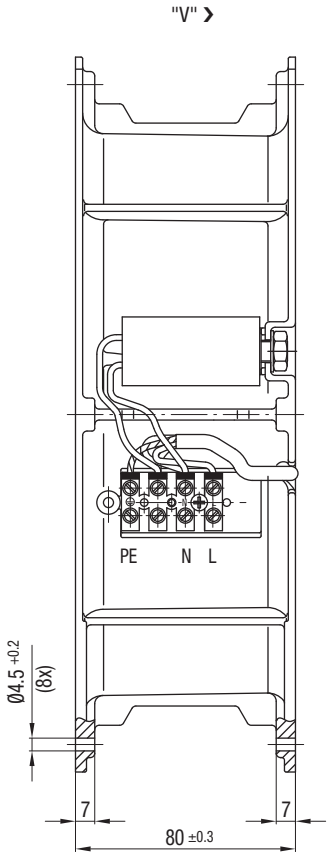

Max. 1880 m³/h

AC axial fans

☐ 225 x 80 mm

- **Material:** Housing: Die-cast-aluminum
  Impeller: PP plastic
  Rotor: Painted black
- **Number of blades:** 7
- **Direction of air flow:** "V"
- **Direction of rotation:** Counterclockwise, looking towards rotor
- **Degree of protection:** IP 44, depending on installation and position
- **Insulation class:** "F"
- **Installation position:** Any
- **Condensation drainage holes:** None
- **Mode of operation:** Continuous operation (S1)
- **Bearings:** Maintenance-free ball bearings

Nominal data		Curve	Nominal voltage	Frequency	Air flow	Nominal speed	Max. power consumption (1)	Max. input current (1)	Capacitor	Sound power level	Max. back-pressure	Admissible amb. temp.	Weight	Connection diagram
Type	**Motor**		**VAC**	**Hz**	**m³/h**	**rpm⁻¹**	**W**	**A**	**F/VDB**	**dB(A)**	**Pa**	**°C**	**kg**	
W2E 250-HP08-01	M2E 068-CF	Ⓐ	1~115	50	1740	2375	125	1.10	12/320	70	100	-25...+50	2.7	P. 263 / A3)
		Ⓑ	1~115	60	1880	2350	165	1.45	12/320	72	110	-25...+45	2.7	
W2E 250-HP06-01	M2E 068-CF	Ⓒ	1~230	50	1695	2320	125	0.55	3.0/400	70	100	-25...+60	2.7	P. 263 / A3)
		Ⓓ	1~230	60	1840	2300	160	0.71	3.0/400	71	110	-25...+50	2.7	

Subject to change

(1) Nominal data in operating point with maximum load and 115/230 VAC

Curves:

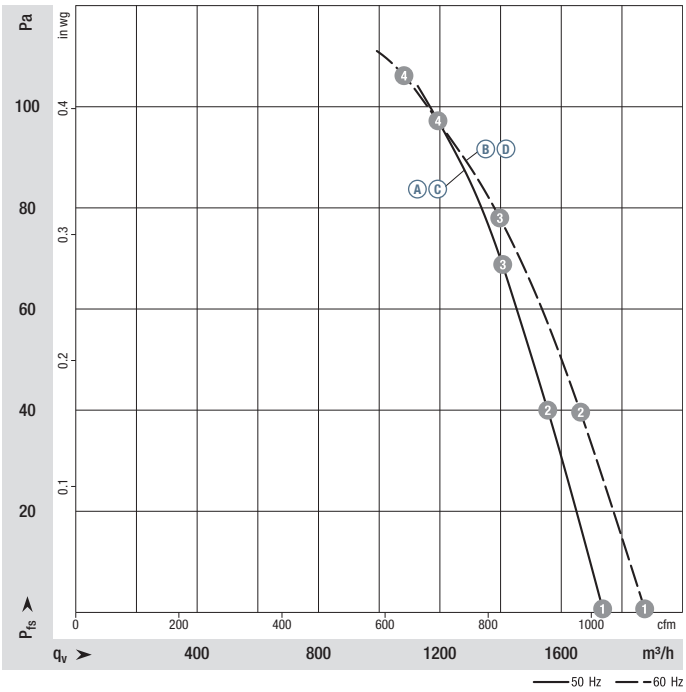

		n rpm⁻¹	P_{ed} W	I A	L_WA dB(A)
Ⓐ	①	2580	108	0.96	70
Ⓐ	②	2510	115	1.02	69
Ⓐ	③	2455	121	1.06	68
Ⓐ	④	2375	125	1.10	68
Ⓑ	①	2785	149	1.30	72
Ⓑ	②	2655	154	1.35	70
Ⓑ	③	2490	162	1.41	70
Ⓑ	④	2350	165	1.45	70
Ⓒ	①	2550	101	0.44	70
Ⓒ	②	2480	109	0.47	69
Ⓒ	③	2410	115	0.50	68
Ⓒ	④	2320	125	0.55	68
Ⓓ	①	2750	134	0.59	71
Ⓓ	②	2600	145	0.63	70
Ⓓ	③	2420	152	0.66	69
Ⓓ	④	2300	160	0.71	70

Air performance measured according to: ISO 5801, Installation category A. For detailed information on the measurement setup, contact ebmpapst. Suction-side noise levels: L_WA according to ISO 13347, L_pA measured at 1 m distance from fan axis. The values given are applicable only under the specified measuring conditions and may differ depending on the installation conditions. In the event of deviation from the standard configuration, the parameters must be checked after installation! For detailed information see http://www.ebmpapst.com/general conditions

ebmpapst

- **Motor protection:** Thermal overload protector (TOP) connected internally
- **Touch current:** < 0.75 mA acc. to IEC 60990 (test circuit, illustration 4)
- **Cable exit:** Variable
- **Electrical hookup:** Via terminal strips, capacitor connected
- **Protection class:** I (with customer connection to grounding conductor)
- **Conformity with standard(s):** EN 60335-1, CE
- **Approvals:** Ⓐ Ⓑ UL 2111, CSA C22.2 no. 77
  Ⓒ Ⓓ EAC, UL 2111, CSA C22.2 no. 77

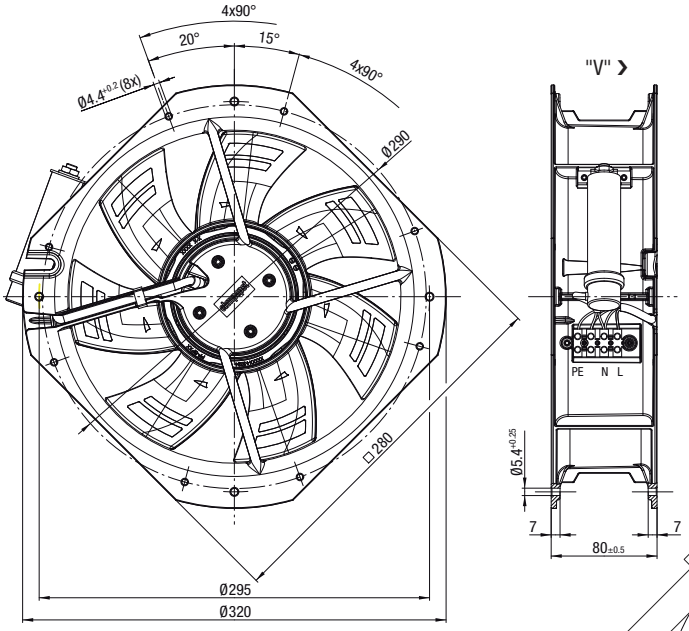

W2E 250-HP08-01

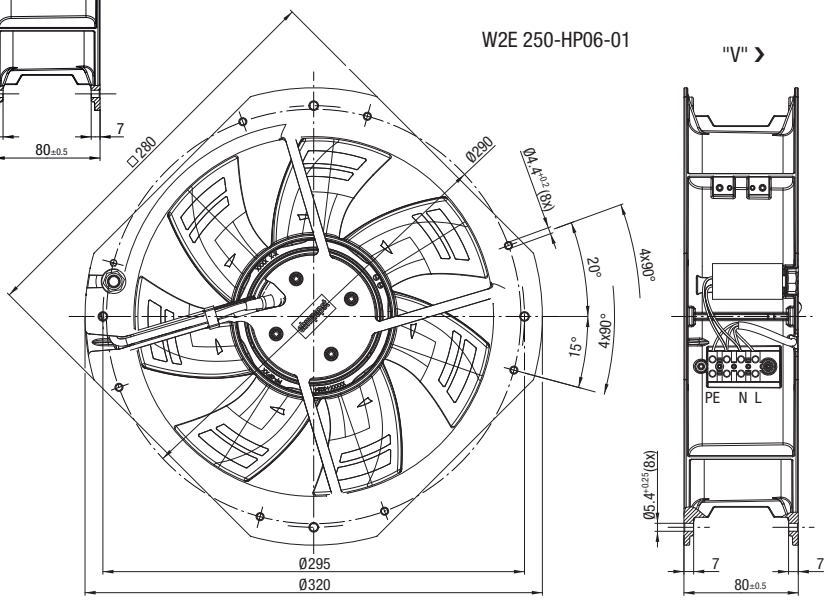

Max. 830 m³/h

AC diagonal module

Ø 200 mm

- **Material:** Housing: PA plastic
  Support bracket: PA plastic
  Impeller: PA plastic
  Rotor: Painted black
- **Number of blades:** 7
- **Direction of air flow:** "V", single inlet
- **Direction of rotation:** Clockwise, looking towards rotor
- **Degree of protection:** IP 44, depending on installation and position
- **Insulation class:** "F"
- **Installation position:** Any
- **Condensation drainage holes:** None
- **Mode of operation:** Continuous operation (S1)
- **Bearings:** Maintenance-free ball bearings

Nominal data

Type	Motor	Curve	Nominal voltage VAC	Frequency Hz	Air flow m³/h	Nominal speed rpm⁻¹	Power consumption W	Input current A	Capacitor µF/VDB	Sound power level dB(A)	Max. back-pressure Pa	Admissible amb. temp. °C	Weight kg	Connection diagram
K2E 200-AA12 -01	M2E 068-CF	A	1~ 115	50	760	2650	64	0.56	6.0/250	70	200	-25..+65	2.1	P. 263 / A1)
		B	1~ 115	60	830	2910	88	0.77	6.0/250	72	240	-25..+65	2.1	

Subject to change

Curves:

——— 50 Hz

- - - - - - 60 Hz

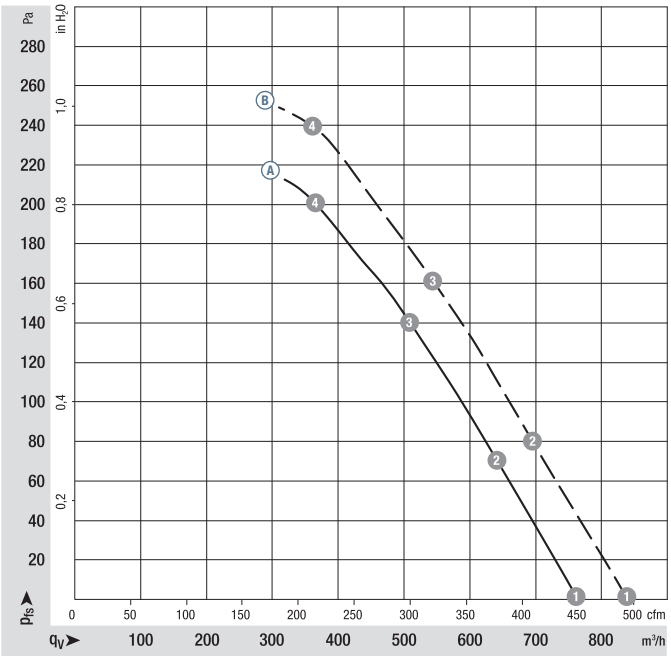

		n rpm⁻¹	P_{ed} W	I A	L_WA dB(A)
A	1	2650	64	0.56	70
A	2	2610	67	0.59	68
A	3	2580	70	0.61	67
A	4	2590	69	0.61	69
B	1	2910	88	0.77	72
B	2	2815	93	0.81	69
B	3	2755	96	0.84	69
B	4	2780	95	0.83	71

Air performance measured according to: ISO 5801. Installation category A, without contact protection. Suction-side noise levels: L_WA according to ISO 13347, L_pA measured at 1 m distance from fan axis. The values given are applicable only under the specified measuring conditions and may differ depending on the installation conditions. In the event of deviation from the standard configuration, the parameters must be checked after installation! For detailed information see http://www.ebmpapst.com/general conditions

ebmpapst

- **Motor protection:** Thermal overload protector (TOP) connected internally
- **Touch current:** < 0.75 mA acc. to IEC 60990 (test circuit, illustration 4)
- **Cable exit:** Lateral
- **Electrical hookup** Via connector
- **Protection class:** I (with customer connection to grounding conductor)
- **Conformity with standard(s):** EN 60335-1, CE
- **Approvals:** UL 2111, CSA C22.2 no. 77

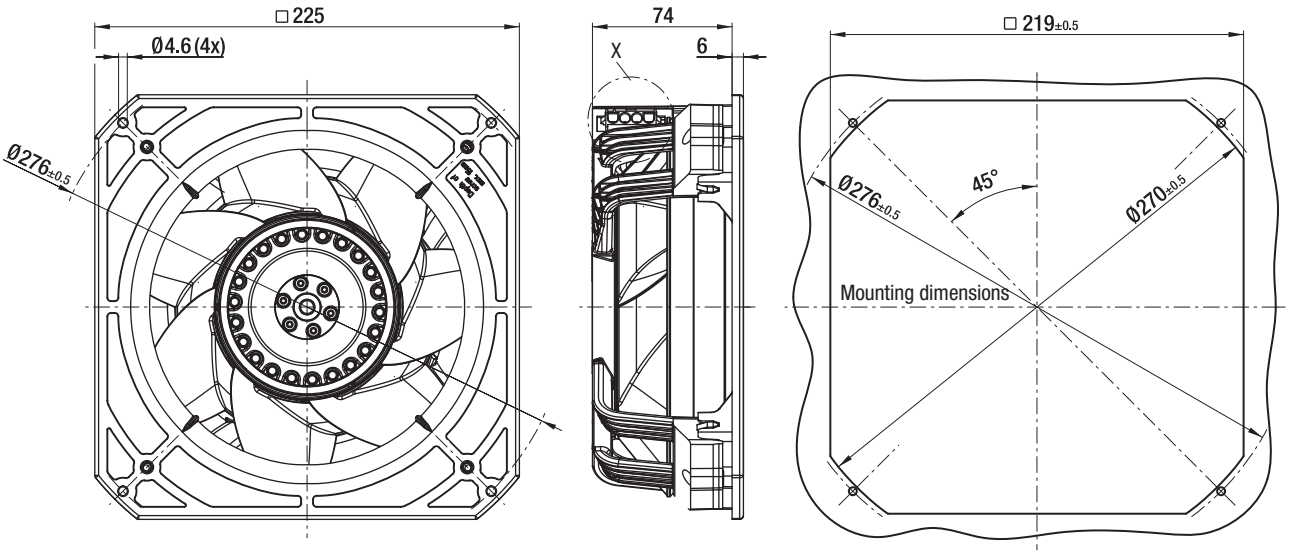

Coded plug system
Universal Mate-N-Lok
Connector shell: AMP 350 780-1
3x plug pins: AMP 926 885-1
Mating connector (not included in scope of delivery):
Connector shell: AMP 350 779-4
3x sockets: AMP 926 884-1

X view

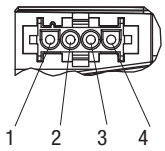

1 = not used
2 = N + capacitor
3 = L
4 = PE

Max. 845 m³/h

AC diagonal module

Ø 200 mm

- **Material:** Housing: PA plastic
  Support bracket: PA plastic
  Impeller: PA plastic
  Rotor: Painted black
- **Number of blades:** 7
- **Direction of air flow:** "V", single inlet
- **Direction of rotation:** Clockwise, looking towards rotor
- **Degree of protection:** IP 44, depending on installation and position
- **Insulation class:** "F"
- **Installation position:** Any
- **Condensation drainage holes:** None
- **Mode of operation:** Continuous operation (S1)
- **Bearings:** Maintenance-free ball bearings

Nominal data

Type	Motor	Curve	Nominal voltage VAC	Frequency Hz	Air flow m³/h	Nominal speed rpm⁻¹	Power consumption W	Input current A	Capacitor µF/VDB	Sound power level dB(A)	Max. back-pressure Pa	Admissible amb. temp. °C	Weight kg	Connection diagram
K2E 200-AA52 -02	M2E 068-CF	A	1~ 230	50	765	2650	65	0.30	2.0/400	70	200	-25..+80	2.1	p. 263 / A1)
		B	1~ 230	60	845	2950	90	0.40	2.0/400	73	245	-25..+80	2.1	

Subject to change

Curves:

——— 50 Hz

- - - - - - 60 Hz

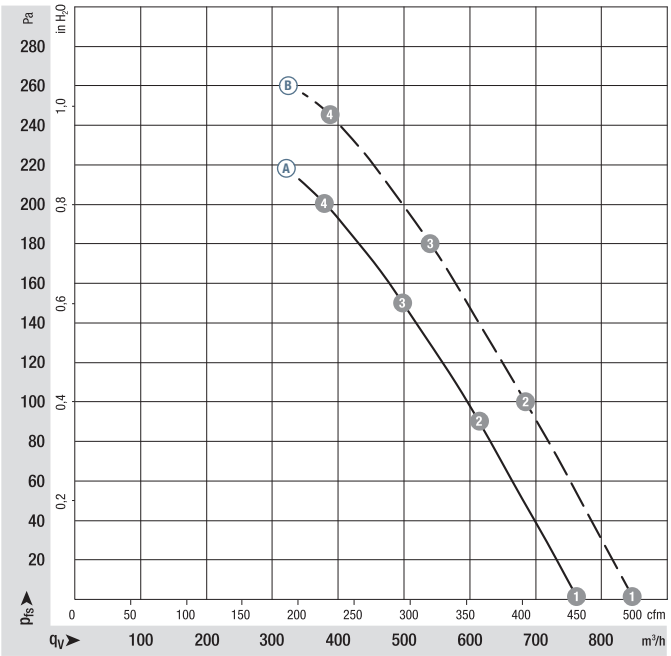

		n rpm⁻¹	P_{ed} W	I A	L_WA dB(A)
A	1	2650	65	0.30	70
A	2	2620	67	0.30	68
A	3	2605	68	0.30	67
A	4	2610	68	0.30	69
B	1	2950	90	0.40	73
B	2	2865	93	0.41	70
B	3	2820	96	0.42	69
B	4	2840	94	0.41	71

Air performance measured according to: ISO 5801. Installation category A, without contact protection. Suction-side noise levels: L_WA according to ISO 13347, L_pA measured at 1 m distance from fan axis. The values given are applicable only under the specified measuring conditions and may differ depending on the installation conditions. In the event of deviation from the standard configuration, the parameters must be checked after installation! For detailed information see http://www.ebmpapst.com/general conditions

ebmpapst

- **Motor protection:** Thermal overload protector (TOP) connected internally
- **Touch current:** < 0.75 mA acc. to IEC 60990 (test circuit, illustration 4)
- **Cable exit:** Lateral
- **Electrical hookup** Via connector
- **Protection class:** I (with customer connection to grounding conductor)
- **Conformity with standard(s):** EN 60335-1, CE
- **Approvals:** UL 2111, CSA C22.2 no. 77

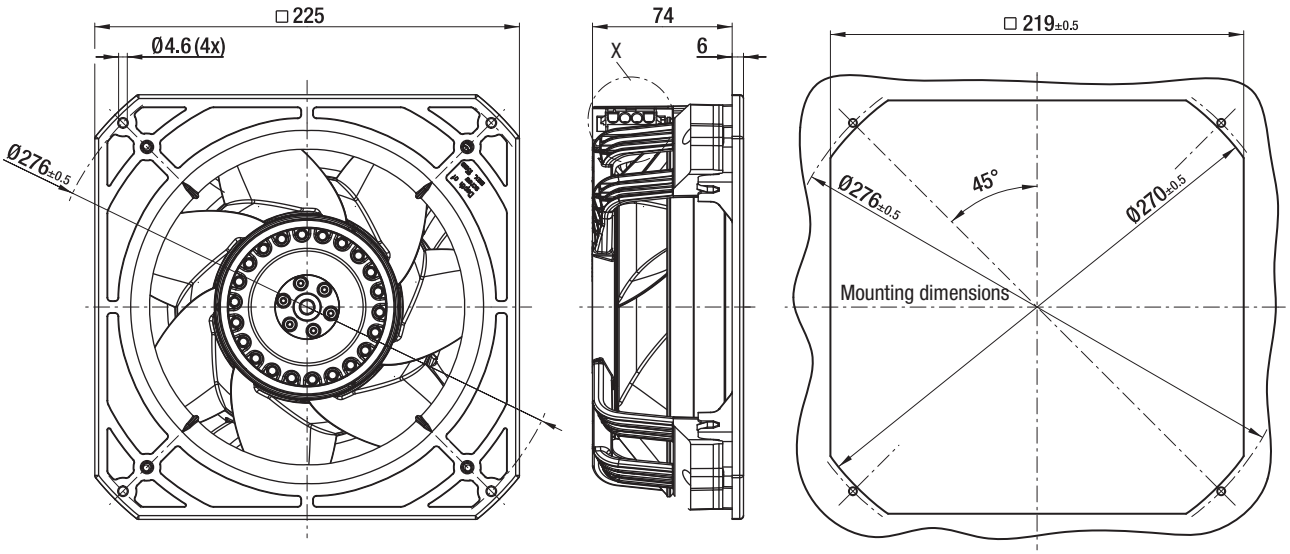

Coded plug system
Universal Mate-N-Lok
Connector shell: AMP 350 780-1
3x plug pins: AMP 926 885-1
Mating connector (not included in scope of delivery):
Connector shell: AMP 350 779-4
3x sockets: AMP 926 884-1

X view

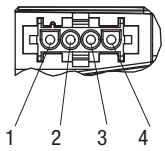

1 = not used
2 = N + capacitor
3 = L
4 = PE

Max. 880 m³/h

AC diagonal module

Ø 200 mm

- **Material:** Housing: PA plastic
  Support bracket: PA plastic
  Impeller: PA plastic
  Rotor: Painted black
- **Number of blades:** 7
- **Direction of air flow:** "V", single inlet
- **Direction of rotation:** Clockwise, looking towards rotor
- **Degree of protection:** IP 44, depending on installation and position
- **Insulation class:** "F"
- **Installation position:** Any
- **Condensation drainage holes:** None
- **Mode of operation:** Continuous operation (S1)
- **Bearings:** Maintenance-free ball bearings

Nominal data

Type	Motor	Curve	Nominal voltage VAC	Frequency Hz	Air flow m³/h	Nominal speed rpm⁻¹	Power consumption W	Input current A	Capacitor µF/VDB	Sound power level dB(A)	Max. back-pressure Pa	Admissible amb. temp. °C	Weight kg	Connection diagram
K2D 200-AA02 -02	M2D 068-CF	A	3~ 400 Y	50	780	2700	65	0.15	—-	71	210	-25..+75	2.0	P. 263 / C2)
		B	3~ 400 Y	60	880	3050	90	0.16	—-	73	260	-25..+75	2.0	

Subject to change

Curves:

——— 50 Hz

- - - - - - 60 Hz

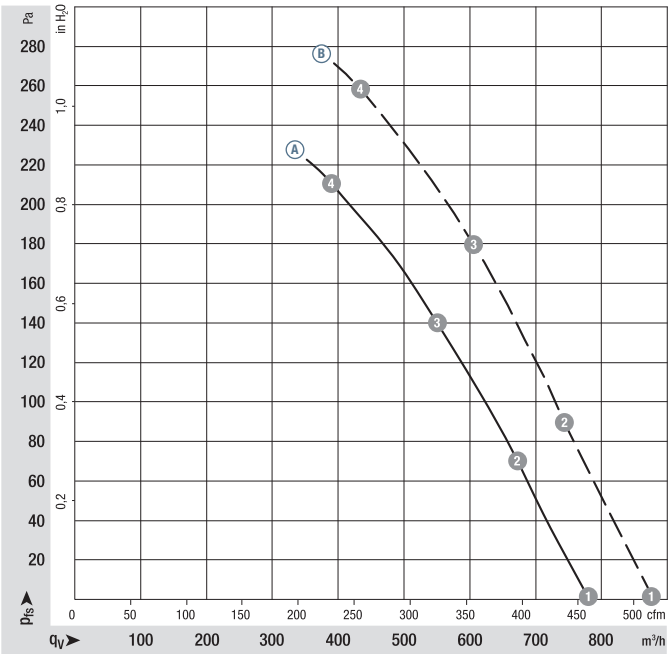

		n rpm⁻¹	P_{ed} W	I A	L_WA dB(A)
A	1	2700	65	0.15	71
A	2	2695	69	0.16	69
A	3	2675	71	0.16	68
A	4	2680	70	0.16	69
B	1	3050	90	0.16	73
B	2	3010	94	0.16	71
B	3	2970	98	0.17	70
B	4	2975	96	0.17	72

Air performance measured according to: ISO 5801. Installation category A, without contact protection. Suction-side noise levels: L_WA according to ISO 13347, L_pA measured at 1 m distance from fan axis. The values given are applicable only under the specified measuring conditions and may differ depending on the installation conditions. In the event of deviation from the standard configuration, the parameters must be checked after installation! For detailed information see http://www.ebmpapst.com/general conditions

ebmpapst

- **Motor protection:** thermal overload protector wired internally
- **Touch current:** < 0.75 mA acc. to IEC 60990 (test circuit, illustration 4)
- **Cable exit:** Lateral
- **Electrical hookup** Via connector
- **Protection class:** I (with customer connection to grounding conductor)
- **Conformity with standard(s):** EN 60335-1, CE

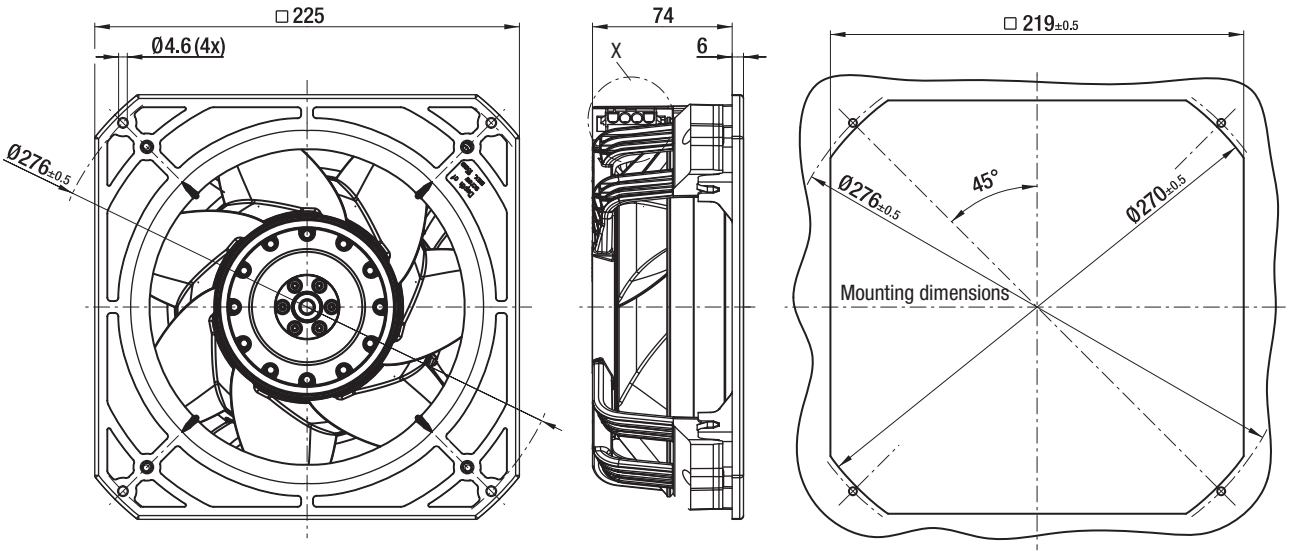

Coded plug system
Universal Mate-N-Lok
Connector shell: AMP 350 780-1
4 x plug pins: AMP 926 885-1
Mating connector (not included in scope of delivery):
Connector shell: AMP 350 779-4
4x sockets: AMP 926 884-1

X view

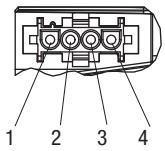

1 = L3
2 = L1
3 = L2
4 = PE

AC centrifugal fans

AC centrifugal fans

Technical information



Product line
The renowned ebm-papst AC fans are used when DC voltage is not available. The AC range of fans is based on experience gained from decades of development know-how, millions of units in series production, and the innovation competence of a world-wide technology pioneer.

In this catalog, we offer you the broad spectrum of our AC fans. In addition to complete systems, you will also find fans without external housing. They offer economic benefits whenever the air duct design can be integrated in the respective device.

Variety of sizes
AC fans are available in a variety of sizes with either air exhaust or air intake over struts. Silent running models with sleeve bearings. Electrical connection with plug connection or external exposed connection wires are available.

Shaded-pole or capacitor motors
Fan drives by shaded-pole or capacitor motors, most of which incorporate the world-famous ebm-papst external rotor principle. The fan blades are directly attached to the external rotor of the external rotor motor. This construction combining high performance with profitability.

Flat built AC fans
ebm-papst also has AC fans with a particularly flat construction and an internal rotor motor. Their advantage: quick start to full speed. A plastic impeller and the smaller and lighter internal rotor motor result in lower rotational inertia.

Bearings
AC fans with sleeve bearings are powered by Class E insulated motors. Fans with ball bearings are equipped with Class B, E, or F insulated motors.

Degree of protection
All ebm-papst fans conform to the requirements of IP 20. Fans conforming to IP 54 / IP 68 and special degrees of protection are also available on request.

AC voltage
The line of AC fans for Euro voltage according to IEC 60038 (230 V ± 10 %) is also available in 115 V.

Frequencies
AC fans can be operated at frequencies of 50 or 60 Hz. In this case, their technical data changes accordingly.

Capacitor
Fans driven by capacitor external motors provide particularly high operating efficiency. Generally, the required motor run capacitor is already integrated in the fan housing.

Overloading
Almost all AC fans are protected against overloading (e. g. due to locked rotor) – either impedance protected (marked "Impedance protected" or "Z. P.") or equipped with a thermal switch (marked "Thermally protected" or "Th. P."). The model designation of these fans ends with "S".

Centrifugal fans for AC operation

Overview of air performance

Dimensions	Series	Air flow	Page
mm		m³/h	
□ 121 x 37	RL 90	40...42	234
□ 135 x 38	RG 90	47...54	235
□ 180 x 40	RG 125	86...94	236
□ 220 x 56	RG 160	202...223	237
Ø 138 x 40	RER 125	104...115	238
Ø 176 x 54	RER 160	234...274	239

Subject to change

Overview of technically feasible designs

Dimensions		VDE, UL, CSA	SINTEC sleeve bearings/ Ball bearings	Speed signal	Moisture protection	IP >= 54	IP 68	Salt spray protection	Page
Centrifugal fans									
mm	Series			OPTIONAL					P.
□ 121 x 37	RL 90	yes	▫/■	–	•	•	–	•	234
□ 135 x 38	RG 90	yes	▫/■	–	•	•	–	•	235
□ 180 x 40	RG 125	yes	■	–	•	•	–	•	236
□ 220 x 56	RG 160	yes	■	–	•	•	–	•	237
Ø 138 x 40	RER 125	yes	■	–	•	•	–	•	238
Ø 176 x 54	RER 160	yes	■	–	•	•	–	•	239

Subject to change

• available – not yet available ▫ Sleeve bearings ■ Ball bearings

Max. 42 m³/h

AC centrifugal fans

☐ 121 x 37 mm

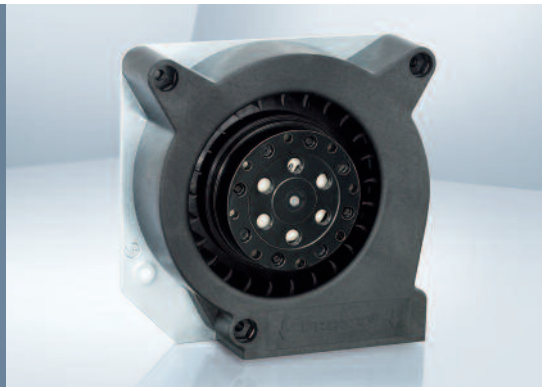

- **Material:** Scroll housing: GRP[1)] (PBT)
  Impeller: GRP[1)] (PA)
  Housing base: Sheet steel
- **Direction of air flow:** Centrifugal: discharge through window in housing
- **Direction of rotation:** Clockwise, looking towards rotor
- **Connection:** Via 2 single wires; housing base with flat plugs 6.3 x 0.8 mm for ground conductor
- **Highlights:** Forward-curved impeller
- **Weight:** 680 g

- **Possible special versions:**
  (See page 12)
  - Moisture protection
  - Salt spray protection
  - Degree of protection: IP 54

1) Fiberglass-reinforced plastic

Series RL 90

Nominal data	Air flow	Air flow	Nominal voltage	Frequency	Sound power level	Sintec sleeve bearings / Ball bearings	Power consumption	Nominal speed	Temperature range	Service life L_{10} at 40 °C	at T_{max}	Curve
Type	**m³/h**	**cfm**	**VAC**	**Hz**	**Bel(A)**	☐/■	**Watts**	**rpm⁻¹**	**°C**	**Hours**	**Hours**	
RL 90-18/50	40	23.5	**230**	**50**	5.6	☐	20.0	2 450	-10...+50	37 500 / 30 000		①
RL 90-18/56	40	23.5	**230**	**50**	5.6	■	20.0	2 450	-30...+70	37 500 / 20 000		①
RL 90-18/00	42	24.7	**115**	**60**	6.0	☐	19.5	2 550	-10...+60	37 500 / 25 000		②
RL 90-18/06	42	24.7	**115**	**60**	6.0	■	19.5	2 550	-30...+85	37 500 / 15 000		②

Subject to change

Fan type		Connection wires
RL 90-18/50	RL 90-18/00	AWG 18, TR 32
RL 90-18/56	RL 90-18/06	AWG 22

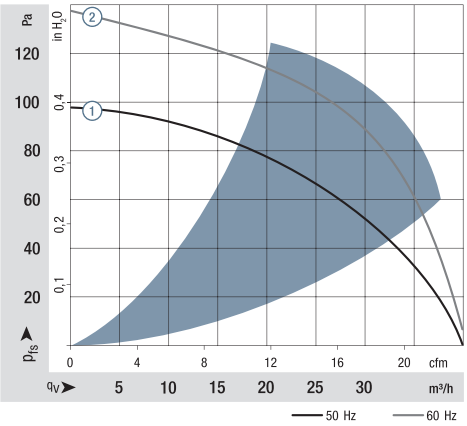

Air performance measured according to: ISO 5801.
Installation category A, without contact protection.
Noise: Total sound power level L_WA ISO 103002measured on a hemisphere with a radius of 2 m;
Sound pressure level L_pA measured at 1 m distance from fan axis.
The values given are applicable only under the specified measuring conditions and may differ depending on the installation conditions. described measurement set-up and may vary depending on the installation situation.
For detailed information see http://www.ebmpapst.com/general conditions

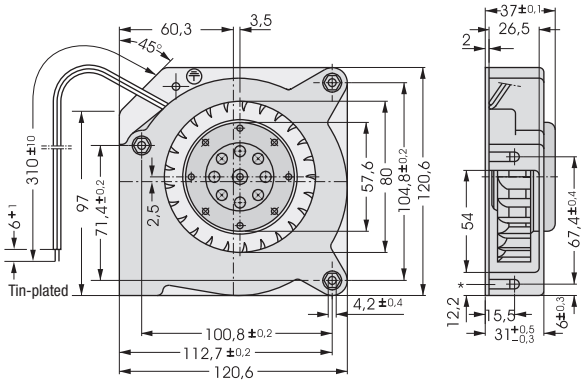

*Speed nut M4 or 8-32UNC. Screw- in depth max.12,5 min 9,0

ebmpapst

Max. 54 m³/h

AC centrifugal fans

☐ 135 x 38 mm

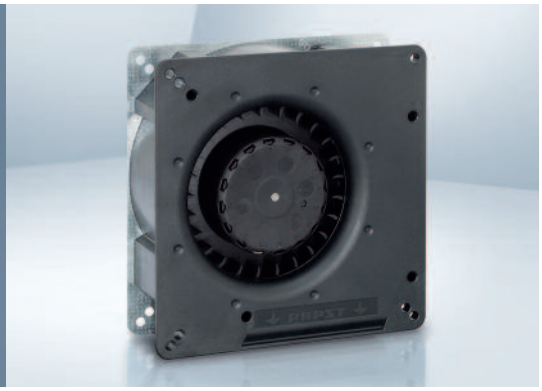

- **Material:** Scroll housing: GRP[1)] (PBT)
  Impeller: GRP[1)] (PA)
  Housing base: Sheet steel
- **Direction of air flow:** Centrifugal: discharge through window in housing
- **Direction of rotation:** Clockwise, looking towards rotor
- **Connection:** To 2 single wires AWG 22.
- **Highlights:** Forward-curved impeller
- **Weight:** 560 g

- **Possible special versions:**
  (See page 12)
  - Moisture protection
  - Salt spray protection
  - Degree of protection: IP 54

1) Fiberglass-reinforced plastic

Series RG 90 **Nominal data**	Air flow	Air flow	**Nominal voltage**	**Frequency**	Sound power level	Sintec sleeve bearings / Ball bearings	Power consumption	Nominal speed	Temperature range	Service life L_{10} at 40 °C	at T_{max}	Curve
Type	**m³/h**	**cfm**	**VAC**	**Hz**	**Bel(A)**	☐/■	**Watts**	**rpm⁻¹**	**°C**	**Hours**	**Hours**	
RG 90-18/50	54	32	**230**	**50**	5.8	☐	22.0	2 200	-30...+60	35 000	22 500	①
RG 90-18/56	54	32	**230**	**50**	5.8	■	22.0	2 200	-30...+60	35 000	22 500	①
RG 90-18/00	47	28	**115**	**60**	6.2	☐	22.0	1 900	-30...+65	35 000	20 000	②
RG 90-18/06	47	28	**115**	**60**	6.2	■	22.0	1 900	-30...+65	35 000	20 000	②

Subject to change

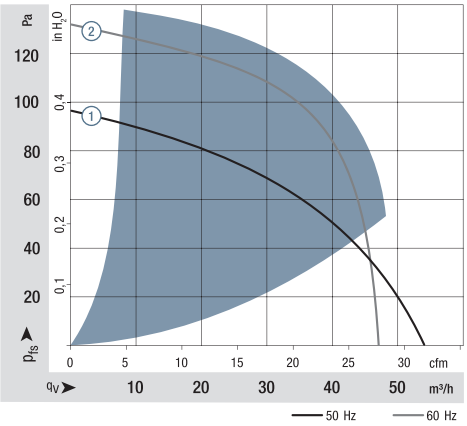

Air performance measured according to: ISO 5801.
Installation category A, without contact protection.
Noise: Total sound power level L_{WA} ISO 103002 measured on a hemisphere with a radius of 2 m.
Sound pressure level L_{pA} measured at 1 m distance from fan axis.
The values given are applicable only under the specified measuring conditions and may differ depending on the installation conditions.
In the event of deviation from the standard configuration, the parameters must be checked after installation!
For detailed information see
http://www.ebmpapst.com/general conditions

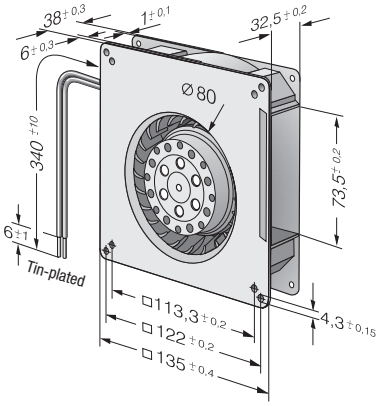

Max. 94 m³/h

AC centrifugal fans

☐ 180 x 40 mm

- **Material:** Scroll housing: GRP[1)] (PBT)
  Impeller: GRP[1)] (PA)
  Housing base: Sheet steel
- **Direction of air flow:** Centrifugal: discharge through window in housing
- **Direction of rotation:** Clockwise, looking towards rotor
- **Connection:** To 2 single wires AWG 22.
- **Highlights:** Backward-curved impeller
- **Weight:** 850 g

- **Possible special versions:**
  (See page 12)
  - Moisture protection
  - Salt spray protection
  - Degree of protection: IP 54

1) Fiberglass-reinforced plastic

Series RG 125

Nominal data

Type	Air flow m³/h	Air flow cfm	Nominal voltage VAC	Frequency Hz	Sound power level Bel(A)	Sintec sleeve bearings ☐ / Ball bearings ■	Power consumption Watts	Nominal speed rpm⁻¹	Temperature range °C	Service life L_{10} at 40 °C Hours	at T_{max} Hours	Curve
RG 125-19/56	86	51	**230**	**50**	5.8	■	20.0	2 550	-30...+70	37 500 / 20 000		①
RG 125-19/06	94	55	**115**	**60**	6.0	■	19.0	2 750	-30...+80	40 000 / 15 000		②

Subject to change

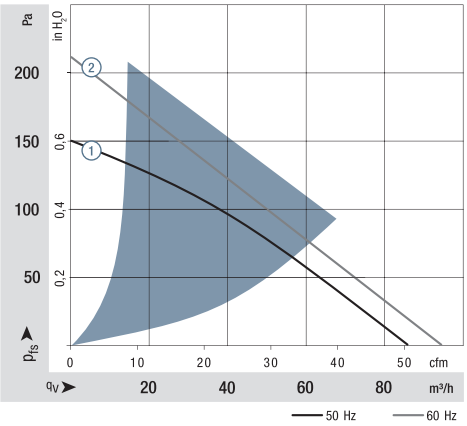

Air performance measured according to: ISO 5801.
Installation category A, without contact protection.
Noise: Total sound power level L_WA ISO 103002 measured on a hemisphere with a radius of 2 m.
Sound pressure level L_pA measured at 1 m distance from fan axis.
The values given are applicable only under the specified measuring conditions and may differ depending on the installation conditions.
In the event of deviation from the standard configuration, the parameters must be checked after installation!
For detailed information see
http://www.ebmpapst.com/general conditions

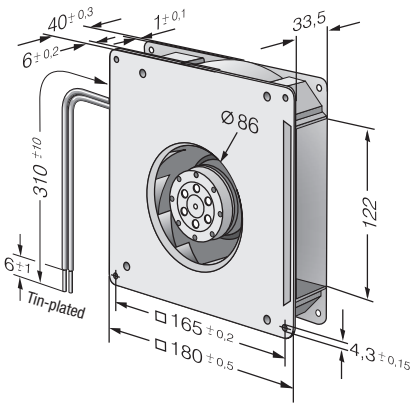

Finger guards
from p. 242

Max. 223 m³/h

AC centrifugal fans

☐ 220 x 56 mm

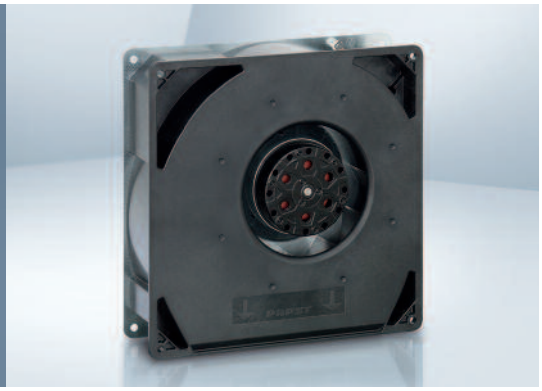

- **Material:** Scroll housing: GRP[1)] (PBT)
  Impeller: GRP[1)] (PA)
  Housing base: Sheet steel
- **Direction of air flow:** Centrifugal: discharge through window in housing
- **Direction of rotation:** Counterclockwise, looking towards rotor
- **Connection:** To 2 single wires AWG 18.
- **Highlights:** Backward-curved impeller
- **Weight:** 1.7 kg

- **Possible special versions:**
  (See page 12)
  - Moisture protection

1) Fiberglass-reinforced plastic

Series RG 160

Nominal data

Type	Air flow m³/h	Air flow cfm	Nominal voltage VAC	Frequency Hz	Sound power level Bel(A)	Sintec sleeve bearings ☐ / Ball bearings ■	Power consumption Watts	Nominal speed rpm⁻¹	Temperature range °C	Service life L_{10} at 40 °C Hours	at T_{max} Hours	Curve
RG 160-28/56S	202	119	**230**	**50**	6.6	■	47.0	2 750	-30...+70	30 000 / 15 000		①
RG 160-28/06S	223	131	**115**	**60**	6.9	■	50.0	3 050	-30...+80	27 500 / 12 500		②

Subject to change

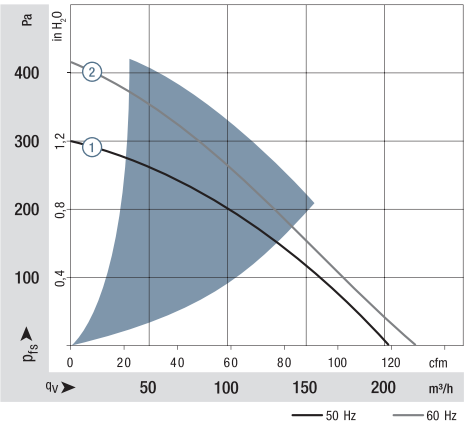

Air performance measured according to: ISO 5801.
Installation category A, without contact protection.
Noise: Total sound power level L_WA ISO 103002 measured on a hemisphere with a radius of 2 m.
Sound pressure level L_pA measured at 1 m distance from fan axis.
The values given are applicable only under the specified measuring conditions and may differ depending on the installation conditions.
In the event of deviation from the standard configuration, the parameters must be checked after installation!
For detailed information see
http://www.ebmpapst.com/general conditions

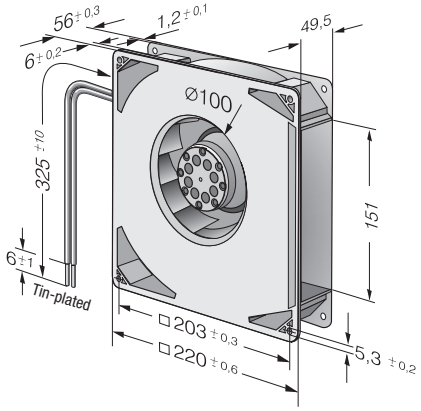

Max. 115 m³/h

AC centrifugal fans

Ø 138 x 40 mm

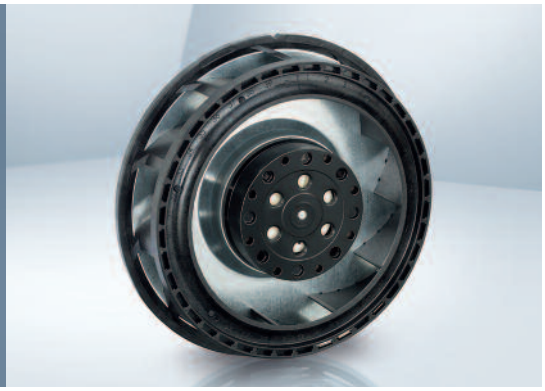

- **Material:** Scroll housing: GRP[1)] (PBT)
  Impeller: GRP[1)] (PA)
  with sheet steel reinforced
- **Direction of air flow:** centrifugal
- **Direction of rotation:** Clockwise,
  looking towards rotor
- **Connection:** To 2 single wires AWG 22.
- **Highlights:** Backward-curved impeller
- **Weight:** 500 g

- **Possible special versions:**
  (See page 12)
  - Moisture protection
  - Salt spray protection
  - Degree of protection: IP 54

1) Fiberglass-reinforced plastic

Series RER 125

Nominal data	Air flow	Air flow	Nominal voltage	Frequency	Sound power level	Sintec sleeve bearings / Ball bearings	Power consumption	Nominal speed	Temperature range	Service life L_{10} at 40 °C	at T_{max}	Curve
Type	**m³/h**	**cfm**	**VAC**	**Hz**	**Bel(A)**	□/■	**Watts**	**rpm⁻¹**	**°C**	**Hours**	**Hours**	
RER 125-19/56	104	61	**230**	**50**	6.2	■	19.0	2 600	-30...+60	37 500 / 22 500		①
RER 125-19/06	115	68	**115**	**60**	6.5	■	18.0	2 850	-30...+70	40 000 / 20 000		②

Subject to change

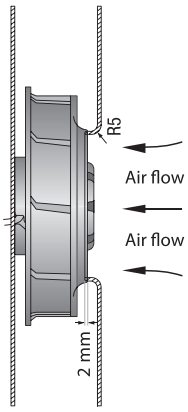

The air flow and sound level of the centrifugal fans without external housing depend on their individual installation conditions. The stated air flow and noise levels have been measured under the following conditions:

Centrifugal fan mounted on a base plate 220 x 220 mm.
Cover plate 220 x 220 mm with an air inlet of Ø 86 mm, concentric to the impeller.

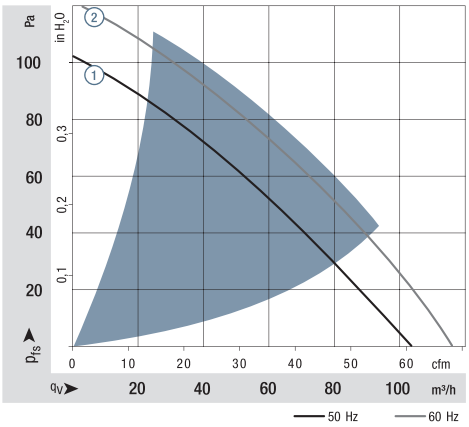

Air performance measured according to: ISO 5801.
Installation category A, with ebm-papst inlet ring without contact protection.
Noise: Total sound power level L_WA ISO 103002 measured on a hemisphere with a distance of 2 m.
Sound pressure level L_pA measured at 1 m distance from fan axis.
The values given are applicable only under the specified measuring conditions and may differ depending on the installation conditions.
In the event of deviation from the standard configuration, the parameters must be checked after installation!
For detailed information see
http://www.ebmpapst.com/general conditions

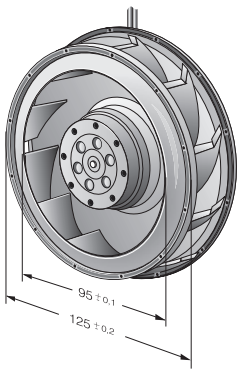

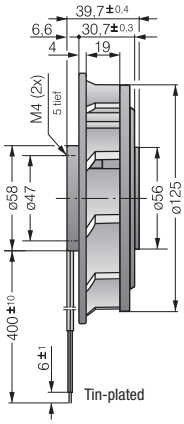

Max. 274 m³/h

AC centrifugal fans

Ø 176 x 54 mm

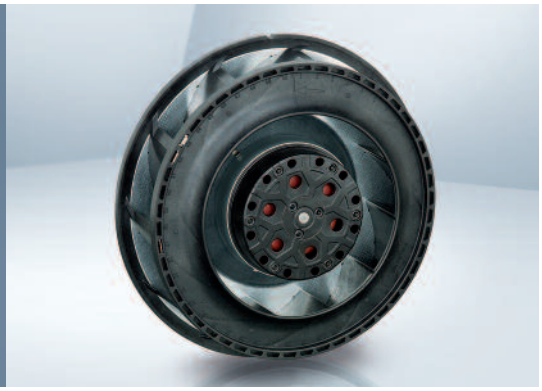

- **Material:** Scroll housing: GRP[1)] (PBT)
  Impeller: GRP[1)] (PA)
  with sheet steel reinforced
- **Direction of air flow:** centrifugal
- **Direction of rotation:** Counterclockwise, looking towards rotor
- **Connection:** To 2 single wires AWG 18.
- **Highlights:** Backward-curved impeller
- **Weight:** 1.0 kg

- **Possible special versions:**
  (See page 12)
  - Moisture protection

1) Fiberglass-reinforced plastic

Series RER 160

Nominal data	Air flow	Air flow	Nominal voltage	Frequency	Sound power level	Sintec sleeve bearings / Ball bearings	Power consumption	Nominal speed	Temperature range	Service life L_{10} at 40 °C	at T_{max}	Curve
Type	**m³/h**	**cfm**	**VAC**	**Hz**	**Bel(A)**	□/■	**Watts**	**rpm⁻¹**	**°C**	**Hours**	**Hours**	
RER 160-28/56S	234	138	**230**	**50**	6.6	■	45.0	2 800	-30...+60	30 000 / 20 000		①
RER 160-28/06S	274	161	**115**	**60**	6.8	■	46.0	3 250	-30...+70	30 000 / 15 000		②

Subject to change

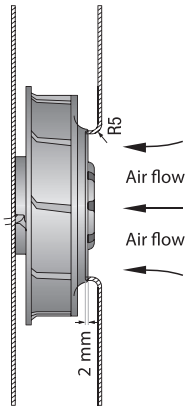

The air flow and sound level of the centrifugal fans without external housing depend on their individual installation conditions. The stated air flow and noise levels have been measured under the following conditions:

Centrifugal fan mounted on a base plate 260 x 260 mm.
Cover plate 260 x 260 mm with an air inlet of Ø 100 mm, concentric to the impeller.

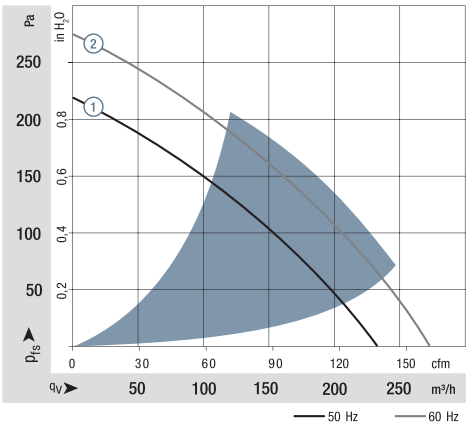

Air performance measured according to: ISO 5801.
Installation category A, with ebm-papst inlet ring without contact protection.
Noise: Total sound power level L_{WA} ISO 103002 measured on a hemisphere with a distance of 2 m.
Sound pressure level L_{pA} measured at 1 m distance from fan axis.
The values given are applicable only under the specified measuring conditions and may differ depending on the installation conditions.
In the event of deviation from the standard configuration, the parameters must be checked after installation!
For detailed information see
http://www.ebmpapst.com/general conditions

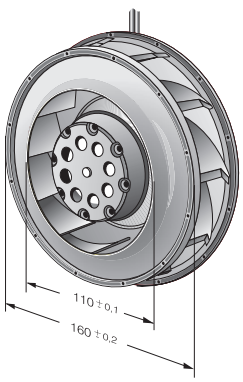

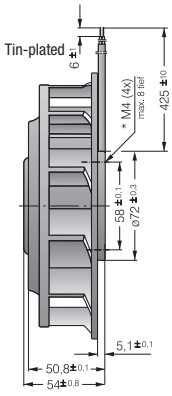

Accessories

ebm-papst offers a comprehensive selection of accessories for optimum fan operation, from temperature sensors for speed-controlled fans, to finger guards for all variants, to cables, filters, and screens, to spacers and installation parts. Even in the case of very special parts, you can be sure: We will assist you every way possible. The sales experts at ebm-papst will be happy to assist you with your question concerning fan installation and use.

From selection to accessories:
Insist on the efficient and reliable service provided by ebm-papst.

Finger guards

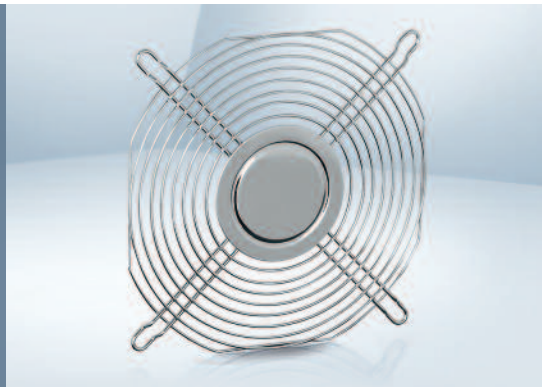

- **Material:** Galvanized or nickel-plated steel wire
- **Note:** Finger guard according to DIN EN ISO 13857 (previously EN 294).
  Additional finger guards that do not satisfy DIN EN ISO 13857 available on request.
  Our finger guards are designed specifically to be uses with ebm-papst fans.
  They combine the highest degree of safety with minimum effect on the operating noise. Please note that the safety-related clearances cannot be guaranteed when finger guards made by other manufacturers are used.

Fan series	Part no.
400	**LZ29-1**
420 J	**LZ29-1**
500	**LZ31**
600	**LZ28-1**
3000	**LZ23-1**
8000	**LZ32-4 / LZ22-2**
9000	**LZ30-4 / LZ 30 / LZ 30-3**
4000	**LZ30-4 / LZ 30 / LZ 30-3**

Fan series	Part no.
5100	**LZ25**
5600	**LZ25**
5200	**LZ35**
5300	**LZ53**
5900	**LZ35**
7000	**LZ36**
6300	**LZ37**
6400	**LZ38**

Fan series	Part no.	Side
2200 F	**LZ22**	
DV 4100	**LZ30-4**	Intake/outlet
DV 5200	**LZ35**	Intake/outlet
DV 6300 TD	**LZ37**	Intake side
DV 6300 TD	**LZ52**	Outlet side
DV 6400	**LZ38**	Intake side
DV 6400	**LZ39**	Outlet side

Subject to change

LZ29-1 — **Fan size 40 x 40**

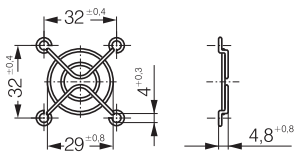

LZ31 — **Fan size 50 x 50**

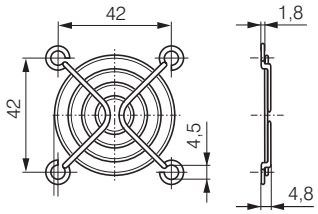

LZ28-1 — **Fan size 60 x 60**

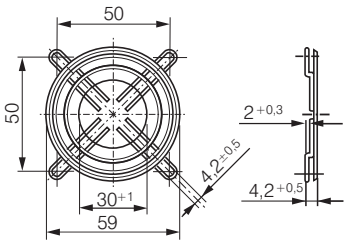

LZ22-2 — **Fan size 80 x 80**

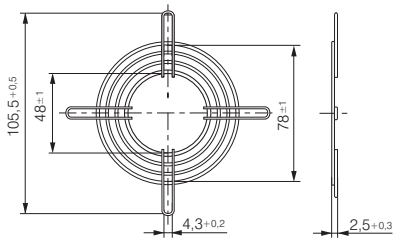

LZ32-4 — **Fan size 80 x 80**

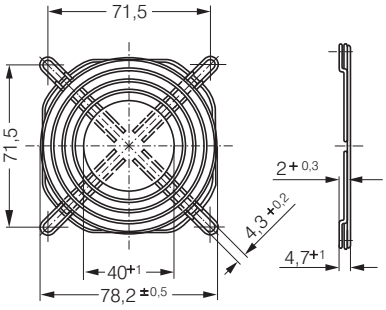

LZ23-1 — **Fan size 92 x 92**

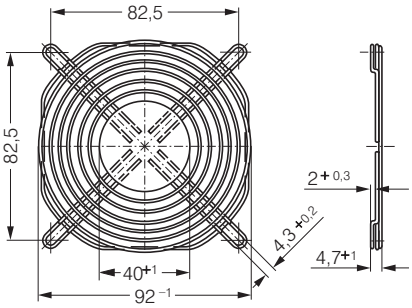

ebmpapst

LZ30 — Fan size 119 x 119

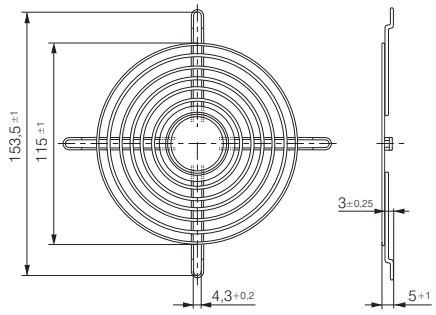

LZ30-3 — Fan size 119 x 119

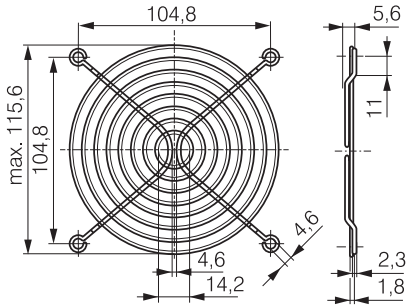

Also called LZ 30
for North America only.

LZ30-4 — Fan size 119 x 119

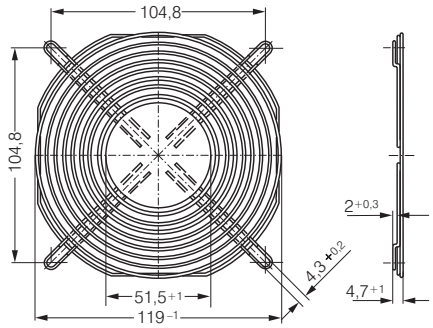

LZ35 — Fan size 127 x 127

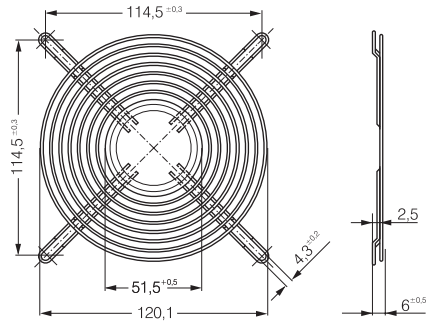

LZ25 — Fan size 135 x 135

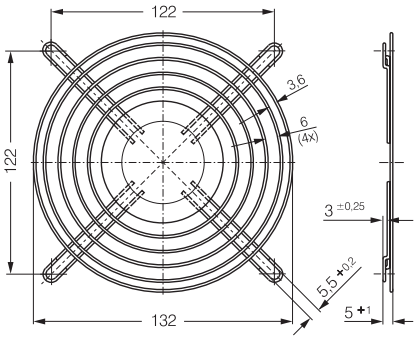

LZ53 — Fan size 140 x 140

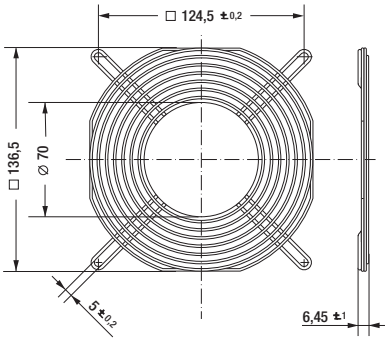

LZ36 — Fan size 150 x 172

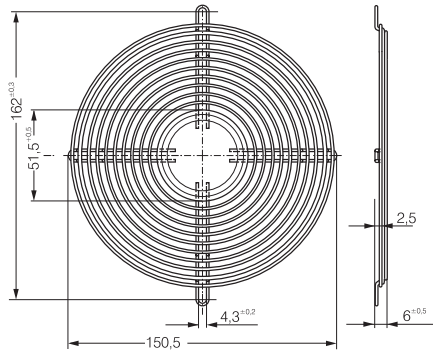

LZ37 — Fan size 172 x 51

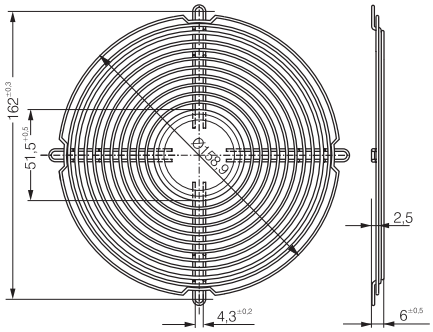

LZ38 — Fan size 172 x 51

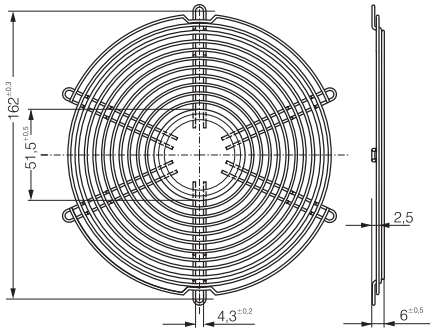

LZ39 — Fan size 172 x 51

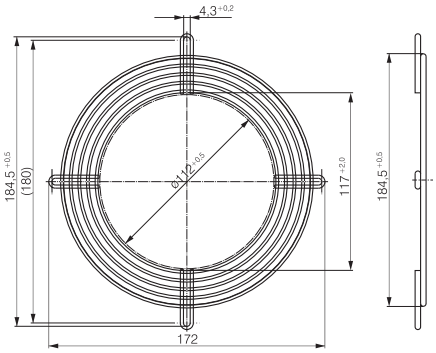

LZ52 — Fan size 172 x 51

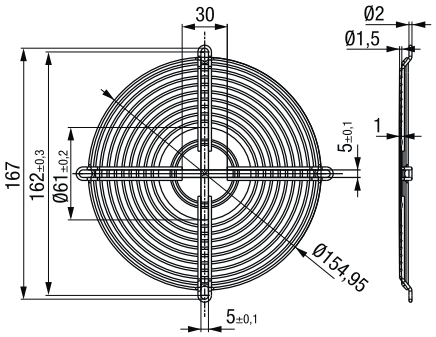

LZ22 — Fan size 200 x 51

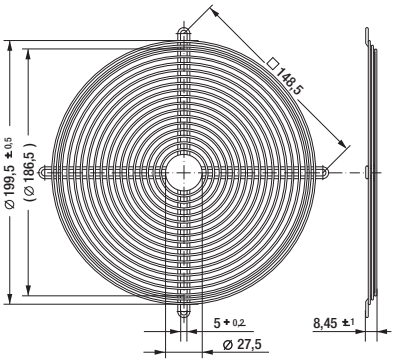

Finger guards

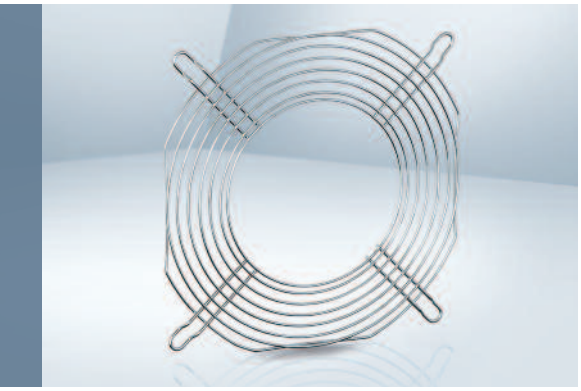

- **Material:** Galvanized or nickel-plated steel wire
- **Note:** Finger guard according to DIN EN ISO 13857 (previously EN 294).
  The finger guard detailed on this page are intended specifically for the ACmaxx / GreenTech EC tubeaxial fan ranges and are mounted on the outlet side.

Fan series	Part no.	Side
AC 8300 H	**LZ32-4**	Intake
AC 8300 H	**LZ32-7**	Outlet
AC 3200 J	**LZ23-1**	Intake
AC 3200 J	**LZ23-6**	Outlet
AC 4400 FN	**LZ30-4**	Intake
AC 4400 FN	**LZ30-9**	Outlet
AC 4300	**LZ30-4**	Intake
AC 4300	**LZ30-9**	Outlet

Fan series	Part no.	Side
ACi 4400	**LZ30**	Intake
ACi 4400	**LZ30**	Outlet
AC 6200 N	**LZ37**	Intake
AC 6200 N	**LZ37-2**	Outlet

* Outlet-side guards on request

LZ30-9 — **Fan size 119 X 119**

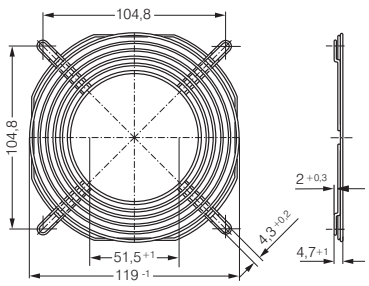

LZ37-2 — **Fan size Ø 172 X 51**

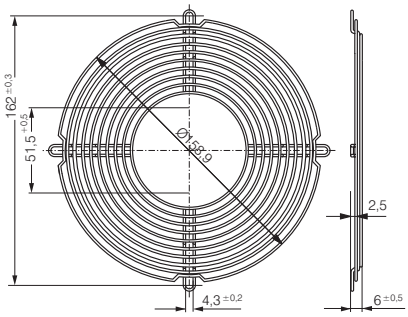

LZ23-6 — **Fan size 92 x 92**

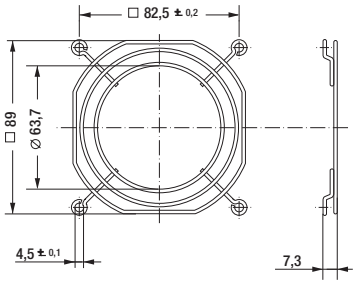

LZ32-7 — **Fan size 80 x 80**

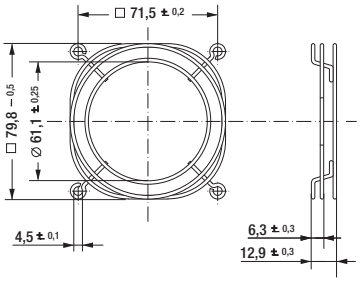

ebmpapst

Finger guards

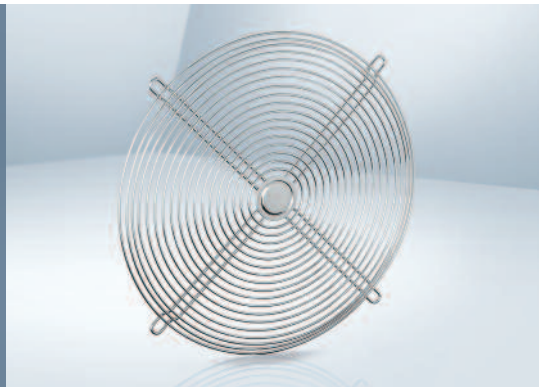

– **Material:** Steel wire, plastic-coated, with silver-metallic gloss

Fan series	Part no.
W3G 200	**78128-2-4039**

Fan series	Part no.
W1G 250	**09418-2-4039**
W3G 250	**09418-2-4039**

78128-2-4039 **Fan size 200**

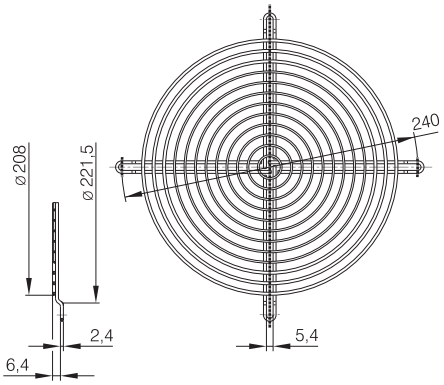

09418-2-4039 **Fan size 250**

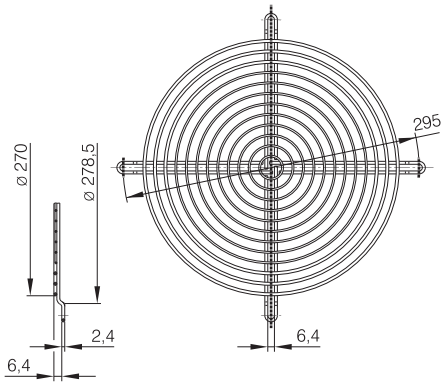

Finger guards

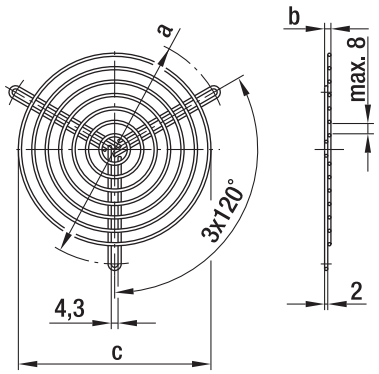

– **Material:** Steel wire

Finger guards for centrifugal blowers with dual inlet

Part no.	Fan size	a	b	c	Coating
83319-2-4039	097 (1)	96.0	3.5	71.0	Phosphated, plastic-coated in RAL no. 9005
09485-2-4039	097 (2)	114.0	3.5	88.0	Phosphated, plastic-coated in RAL no. 9005
09500-2-4039	133 / 146	145.0	4.0	122.0	Phosphated, plastic-coated in RAL no. 9005

Subject to change (1) for D2E097-CH (2) for D2E097-B*

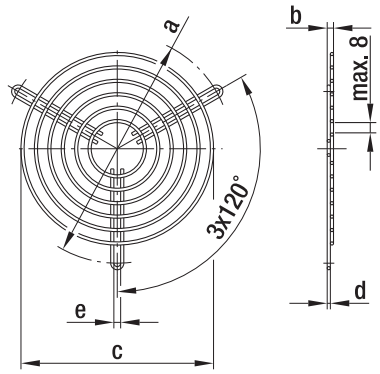

– **Material:** Phosphated steel wire, plastic-coated, silver-metallic gloss

Finger guards for centrifugal blowers with dual inlet (versions with EW motor)

Part no.	Fan size	a	b	c	d	e
35000-2-4039	160	182.0	12.0	144.0	2.4	4.5

Subject to change

ebmpapst

Finger guards

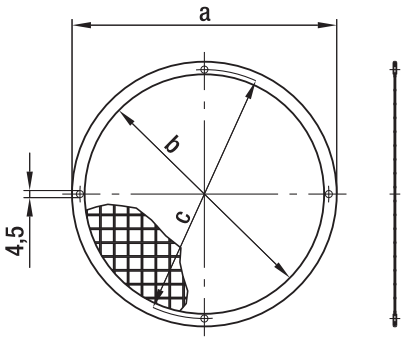

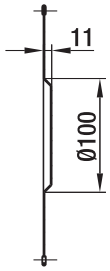

(4) Fan size 160

– **Material:** Welded screens made of hot-dip galvanized steel, border made of tin (0.4 mm thick)

Finger guards for centrifugal blowers with single inlet

Part no.	Fan size	a	b	c
09489-2-4039	085 (3)	90.0	74.0	84.0
09490-2-4039	108	126.0	110.0	118.0
09494-2-4039	120	140.0	124.0	132.0
09492-2-4039	140 / 146	168.0	152.0	158.0
09503-2-4039	160 (4)	183.0	170.0	175.0

Subject to change (3) 3 drilled holes staggered by 120°

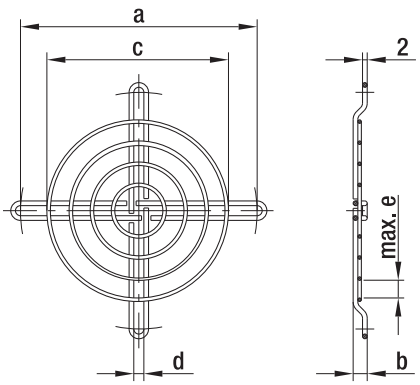

– **Material:** Steel wire

Finger guards for centrifugal blowers with single inlet

Part no.	Fan size	a	b	c	d	e	Coating
09603-2-4039	076 / 085	101.0	6.0	79.0	4.3	8.0	Plastic coated, silver-metallic gloss
98214-2-4039	108	120.0	3.5	88.0	4.3	8.0	Plastic coated, silver-metallic gloss
25028-2-4039	140 / 146	162.0	8.5	139.0	4.3	8.0	Galvanized, chromatized in blue
17729-2-4039	160	175.0	3.5	139.0	4.6	7.0	Galvanized, chromatized in blue

Subject to change

Finger guards

- **Material:** Fiberglass-reinforced plastic
- **Note:** Finger guard according to DIN EN ISO 13857 (previously EN 294).
  Plastic guards may not be used for the following models:
  8200 JH3 / JH4
  3200 JH3 / JH4
  4100 NH5 - NH8

Part no.	Mounting	B	C	D	E
LZ28-3	A3	$60^{-0.5}$	$50.0^{\pm 0.2}$	3.0	24
LZ32-2	A1	$80^{-0.5}$	$71.5^{\pm 0.2}$	7.0	34
LZ32-3	A3	$80^{-0.5}$	$71.5^{\pm 0.2}$	7.0	34
LZ23-2	A1	$92.5^{-0.5}$	$82.5^{\pm 0.2}$	6.5	46
LZ23-3	A3	$92.5^{-0.5}$	$82.5^{\pm 0.2}$	6.5	46

Part no.	Mounting	B	C	D	E
LZ30-5	A2	$119^{-0.5}$	$105^{\pm 0.2}$	6.5	50
LZ30-6	A4	$119^{-0.5}$	$105^{\pm 0.2}$	6.5	50
LZ33-1	A2	$127^{-0.5}$	$113.5^{\pm 0.2}$	6.5	50
LZ33-2	A4	$127^{-0.5}$	$113.5^{\pm 0.2}$	6.5	50

Subject to change

LZ28-3	Fan size 60 x 60
LZ32-2 / LZ32-3	Fan size 80 x 80
LZ23-2 / LZ23-3	Fan size 92 x 92
LZ30-5 / LZ30-6	Fan size 119 x 119
LZ33-1 / LZ33-2	Fan size 127 x 127

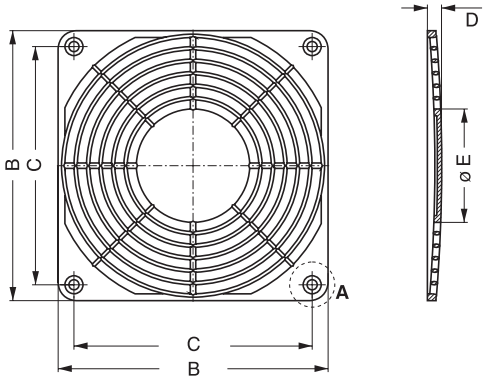

Screw connection

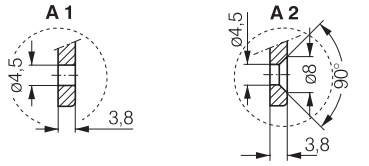

Barbed inserts

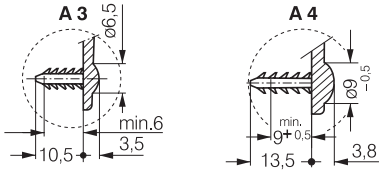

Only suitable for bore hole diameter
¯4.3 - ¯4.7.

LZ28-3	Fan size 60 x 60

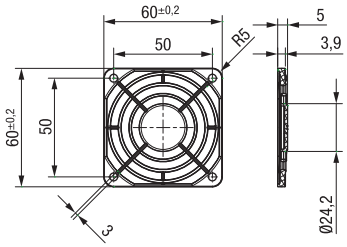

LZ32P	Fan size 80 x 80

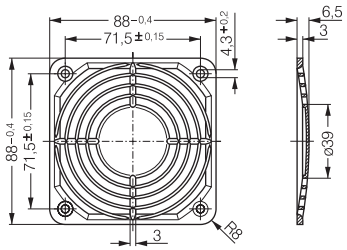

LZ30P	Fan size 119 x 119

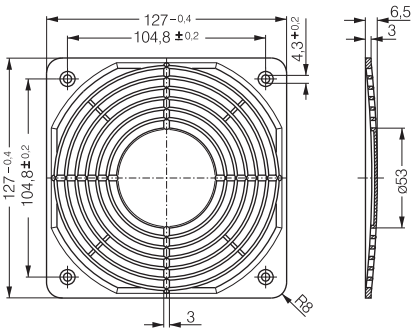

ebmpapst

Finger guards

For compact centrifugal modules

- **Material:** PA plastic, fiberglass-reinforced
- **Highlights:** Flame protection class in line with UL 94V-0

Fan series	Part no.	a	b
RG 190	**LZ46-1**	133	9.0
RG 220	**LZ47-1**	166	8.7
RG 225	**LZ48-1**	158	8.7

Subject to change

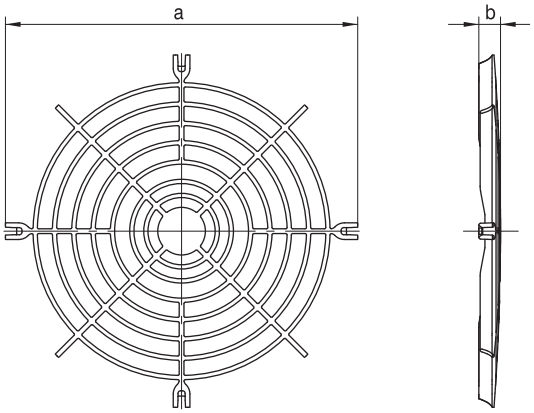

Filter fan guards

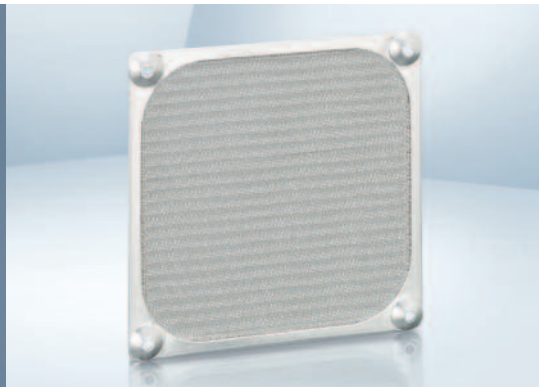

– **Material:** Filter guard LZ40 N: black, fiberglass-reinforced plastic with inserted wire mesh LZ60.
Coarse filter LZ60: stainless steel wire mesh
Mounting lug LZ40-1 for mounting

DC fan series	AC fan series
4400 F	AC 4300
4400 FN	9900
4300	4000 N
4400	4000 Z
4100 N	Subject to change

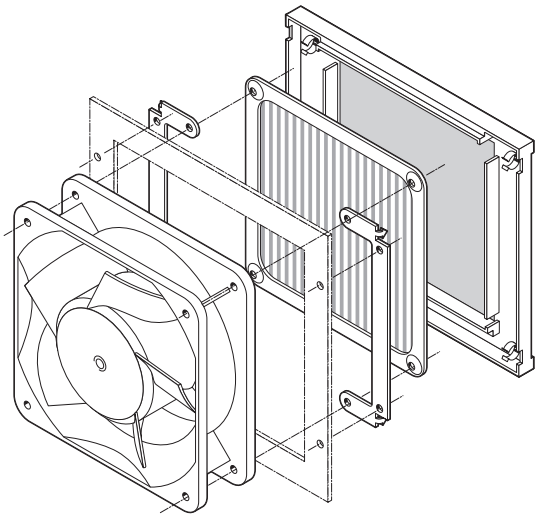

LZ40N — **Filter guard**

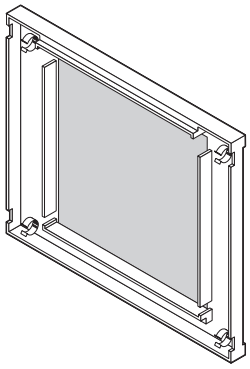

LZ40-1 — **Mounting lug**

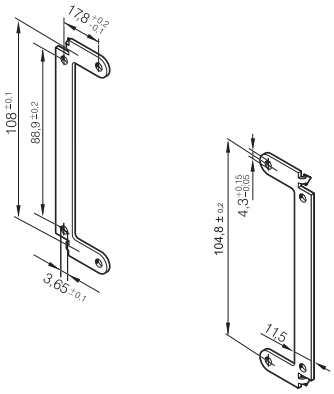

LZ60 — **Coarse filter**

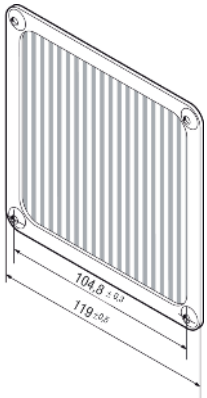

ebmpapst

Filter fan guards

- **Material:** Guard cover: Injection-molded polycarbonate (PC) with mat surface.
  Mounting plate: wire mesh with black powder coating
  Filter pad: white, synthetically bonded fibers
- **Note:**
  Filter fan guards suitable for fitting on axial fan series in sizes:
  60 mm, 80 mm, 92 mm, 119 mm, ø 172 mm. All filter units fit directly on the existing mounting holes of the fans.
  Filter fan guards consisting of 3 parts: external guard cover, internal mounting plate, and replaceable filter pad.
  The filter pad can be replaced quickly and easily via a quick release on the guard cover.
  The filter pads can be replaced even while the fan is running, as protection is provided by the welded wire mesh.

Part no.	Fan size	A	B	C	D	Part no. Replacement filter*
FF60	60 x 60 mm	65	65	13.5	50.0	**RF 60**
FF80	80 x 80 mm	85	85	14.0	71.5	**RF 80**
FF92	92 x 92 mm	125	105	17.5	82.5	**RF 92**
FF119	119 x 119 mm	162	136	18.5	104.5	**RF 119**
FF172	ø 172 mm	226	190	19.5	162.0	**RF 172**

Subject to change

* Replacement filter available only in packages of 5.

FF60 / FF80

Fan size: 60 x 60 mm
80 x 80 mm

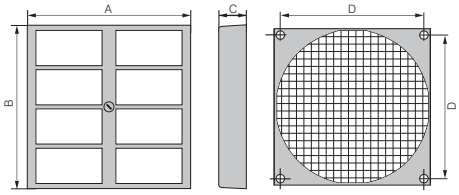

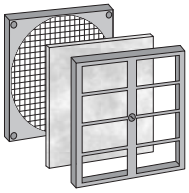

FF92 / FF 119

Fan size: 92 x 92 mm
119 x 119 mm

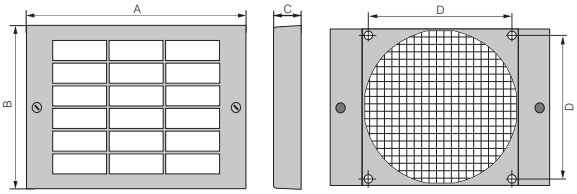

FF 172

Fan size: Ø 172 mm

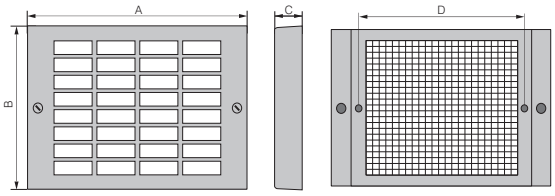

Filter performance

The filter fan guard filters 75% of dust particles with a size of 5-10 microns and can withstand temperatures of up to 100 °C. Filter class G3 according to DIN EN 779. Flame-retardant according to DIN 53438, class F1. When a clean filter is installed, a reduction of air flow of 20-30% is possible.

Inlet rings

For centrifugal fans

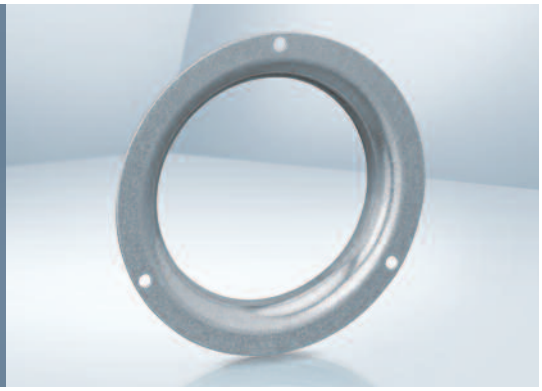

– **Material:** Galvanized sheet steel

Fan		Part no.	k	m	o	q	r_1	s	t	u	Vers.
RET 97	(S)	**LZ 1000-097**	116,0	80,0	10,0	0,80	10,0	108,0	3x4,5	–	1
RER 120	(K)	**LZ 1000-120**	146,0	94,4	18,0	0,80	16,0	134,0	4x4,5	126,0	1
RER 133	(K)	**LZ 1000-133**	129,0	87,0	13,0	1,00	8,0	118,0	4x4,5	103,0	1
RER 160	(S)	**LZ 1000-160**	142,0	100,0	9,0	1,00	8,0	132,0	4x4,5	–	1
RER 175 / 190	(K)	**LZ 1000-175**	170,0	125,5	14,0	1,25	10,0	158,0	4x4,5	146,0	1
RER 220	(K)	**LZ 1000-220**	252,0	155,0	21,0	0,80	22,0	–	–	199,0	2
RER 225	(K)	**LZ 1000-225**	223,0	146,0	28,0	1,50	25,0	210,0	4x4,5	196,0	1

(P) = plastic, (S) = galvanized sheet steel

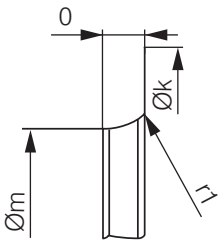

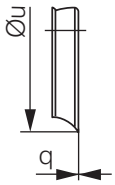

Vers. 1

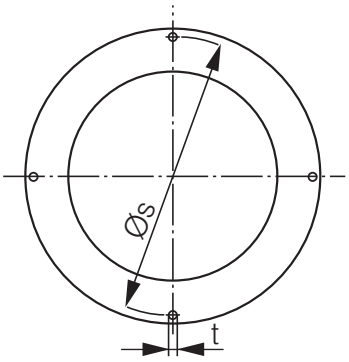

Vers. 2

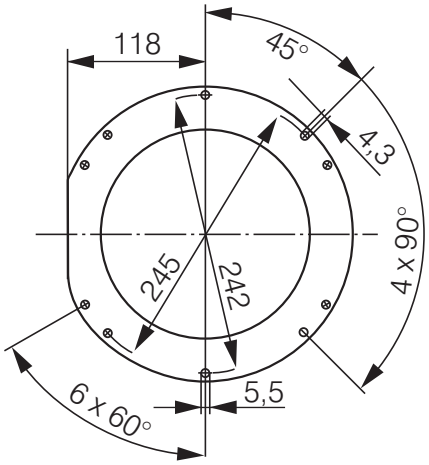

ebmpapst

Inlet rings

For centrifugal fans

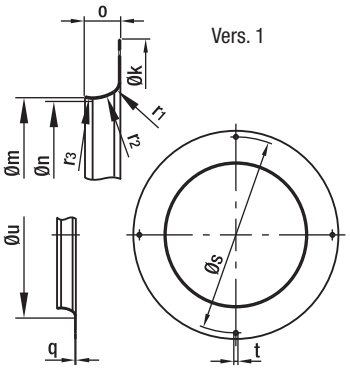

– **Material:** Galvanized sheet steel

Inlet rings for backward curved centrifugal fans

Part no.	Fan size[1]	Vers.	k	m	n	o	q	r_1	r_2	r_3	s	t	u
96120-2-4013	120 (P)	1	146.0	94.4	—	18.0	0.80	16.0	—	—	134.0	4x4.5	126.0

Subject to change (1) Fan size with key for impeller material: (P) = plastic, (S) = sheet steel, (A) = aluminum

Vers. 1

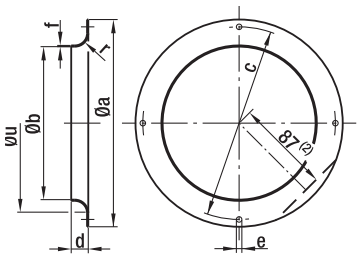

– **Material:** Galvanized sheet steel

Inlet rings for forward curved centrifugal fans

Part no.	Fan size	Vers.	a	b	c	d	e	f	r	u
09560-2-4013	085 (1)	1	92.0	63.4	84.0	6.0	3x4.2	0.80	6.8	—
09563-2-4013	097 (1)	1	116.0	80.0	108.0	10.0	3x4.5	0.80	10.0	—
09566-2-4013	108	1	129.0	87.0	118.0	13.0	4x4.5	1.00	8.0	—
09569-2-4013	120	1	142.0	100.0	132.0	9.0	4x4.5	1.00	8.0	—
09572-2-4013	133	1	150.0	112.0	142.0	12.0	4x4.5	1.00	10.0	—
09576-2-4013	140 / 146	1	170.0	125.5	158.0	14.0	4x4.5	1.25	10.0	—
09588-2-4013	160	1 (2)	185.0	130.0	175.0	17.0	4x4.5	0.75	12.0	—

Subject to change (1) 3 drilled holes staggered by 120° (2) only for 09588-2-4013

Inlet rings / air filter

For centrifugal fans

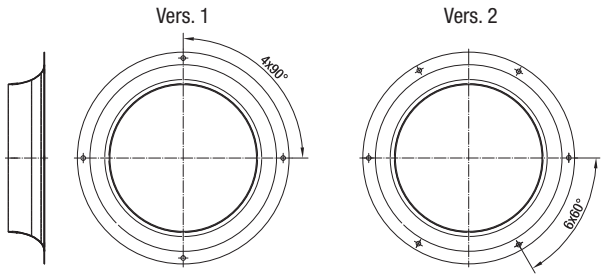

Material: Galvanized sheet steel

Inlet rings without measuring device for backward curved centrifugal fans

Part no.	Fan size	Vers.	Dimensions
09576-2-4013	190	1	See corresponding product page
09609-2-4013	220	2	See corresponding product page
96358-2-4013	225	1	See corresponding product page
96359-2-4013	250	1	See corresponding product page
28000-2-4013	280	1	See corresponding product page
31000-2-4013	310	1	See corresponding product page

Subject to change

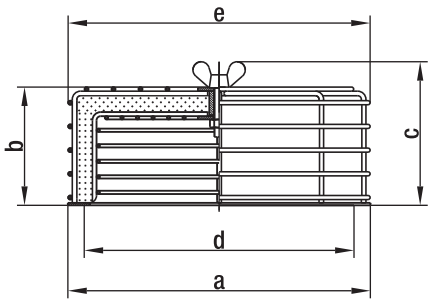

- **Material:** Steel wire or sheet steel, plastic coated in RAL no. 9005, black
- **Filter:** Viledon filter type R: PSB / 29 OS (according to DIN 24185)
  Separation capacity: < 86%
  Efficiency: < 20%
  Dust binding capacity: 650 g/m²

Air filters for centrifugal blowers (with die-cast aluminum housing)

Part no.	Fan size	a	b	c	d	e	Replacement filter
95777-1-5171	108 / 120	142.0	66.0	83.0	118-132	145.0	95779-1-5171
95778-1-5171	140 / 146 / 160	185.0	74.0	91.0	158-175	185.0	95780-1-5171

Subject to change

ebmpapst

Cables

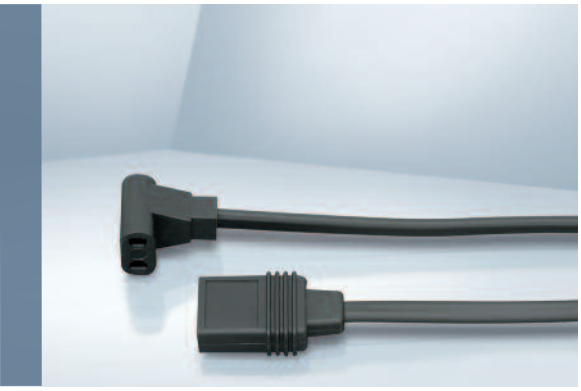

- Cable with molded plug connection in varying lengths.
- Wire end with wire end ferrules, crimped ferrules, or tin-plated.
- Straight or angled plug.
- For all fan types with flat plug 2.8 / 3.0 x 0.5.

Part no.	L1 (mm)	Wires	Plug	Wire end	Flat push-on receptacle	Application
LZ120	610	0.5 mm²	G	C	2.8 x 0.5	AC
LZ120-4	2 000	0.5 mm²	G	A	2.8 x 0.5	AC
LZ120-5	380	0.5 mm²	W	B	2.8 x 0.5	DC
LZ120-6	610	0.5 mm²	W	B	2.8 x 0.5	DC
LZ120-11	2 000	0.5 mm²	G	A	2.8 x 0.5	DC
LZ120-16	800	0.5 mm²	G	B	2.8 x 0.5	AC
LZ120-18	4 000	0.5 mm²	G	A	2.8 x 0.5	AC
LZ126	1 000	0.5 mm²	G	C	2.8 x 0.5	AC
LZ127	1 600	0.5 mm²	G	B	2.8 x 0.5	AC
LZ130-1	610	0.82 mm²	G	C	2.8 x 0.5	AC *
LZ140	610	0.73 mm²	G	B	2.8 x 0.8	AC

* UL-approved

Cable — **Straight plug (G)**

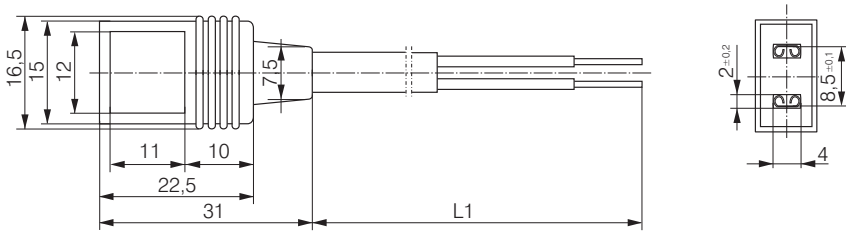

Cable — **Angled plug (W)**

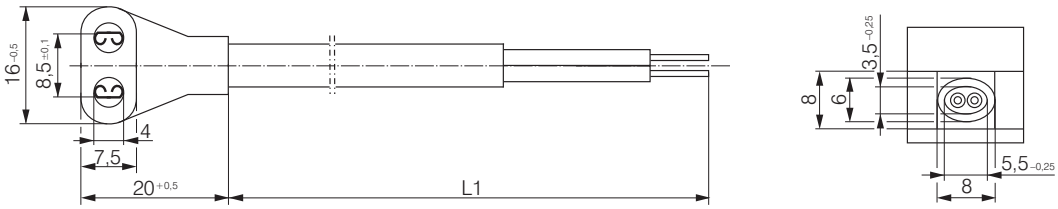

Wire end ferrules — **Wire end A**

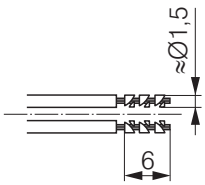

Tin-plated — **Wire end B**

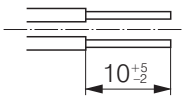

Wire end ferrules — **Wire end C**

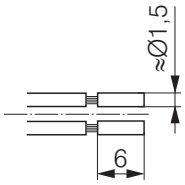

Cable (ESM) / Handheld Programmer

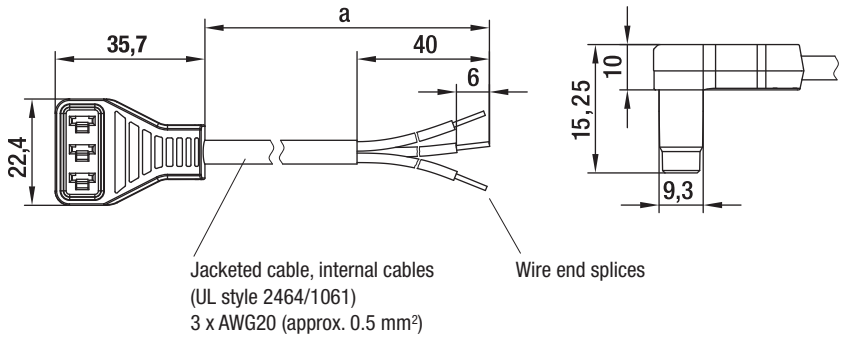

– **Design:** Cable conforms to UL standards sealed plug. Customized cables on request.

Cables for energy-saving motors 115/230 VAC

Part no.	a
13060-4-1040	450
13061-4-1040	1500

Subject to change

- **Easy speed programming**
- **Battery operated**
- **User-friendly navigation menu**
- **Protective cover with folding stand**

For Energy Saving Motor (ESM) based products

Part no.
CBC 000-AF08-01

Subject to change

Makes quick work of programming the two ESM adjustable operating speeds. Eliminates the need for a PC, software adapter and second cable. Especially for use in production or by sales representatives. Automatic shut-off function for extended battery life.
Mini USB plug for downloading software updates. Batteries, programming cable, and operating instructions included in scope of delivery.

Accessories

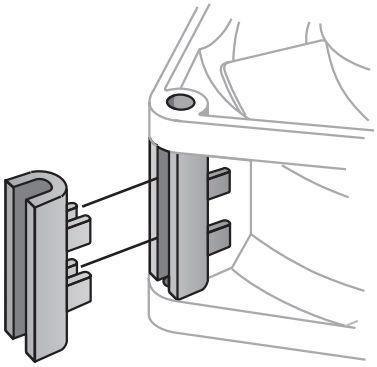

In addition to the accessories and installation parts listed here, ebm-papst also supplies a number of additional, sometimes very special parts for fans. Our company sales team is happy to offer you their expert assistance with all your questions regarding the installation and use of our fans.

Fan series	Part no.
8300	**LZ212 / LZ260**
8400 N	**LZ261**
3400 N	**LZ261**
9000	**LZ210**
4000	**LZ210**
4300	**LZ212 / LZ260**

Fan series	Part no.
5100	**LZ210**
5600	**LZ210**
5200	**LZ210**
5900	**LZ210**
7000	**LZ210**
VARIOFAN	**LZ370**

LZ212

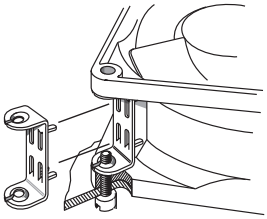

Screw clip of rustproof spring steel.
For mounting fans with threaded pin 3.5 DIN EN ISO 1478 (7970).

LZ260/LZ261

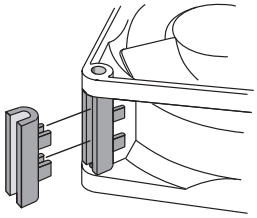

Spacer of fiberglass-reinforced plastic.
For mounting with screws through both fan mounting flanges.

LZ210

Screw clip of hardened steel.
For mounting fans with threaded pin 6-32 UNC or 3.5 DIN 7970.

LZ370

Required performance data:

R_{25}	= 100 KΩ ±5% @25°C
B-value	= 4190 ±2%
P_{max}	= 0,25 W

Temperature sensor for speed-controlled fan operation. Temperature range 30...50 °C.

LZ550

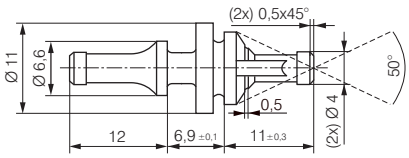

Rubber anti-vibration mounts
for fans with a hole ø of 4.3 ±0.2 mm and flange thickness of 3 to 5.5 mm.
For a carrier plate with a hole ø of 6.5 ±0.15 mm and plate thickness of 1 to 2 mm.

Connection diagrams EC E)

Technical features (nominal voltage 24 / 48 VDC)**:**

- Control input 0-10 VDC / PWM
- Tach output
- Reverse polarity and locked-rotor protection
- Motor current limitation
- Voltage-dependent derating
- Thermal overload protection electronics
- Soft startup

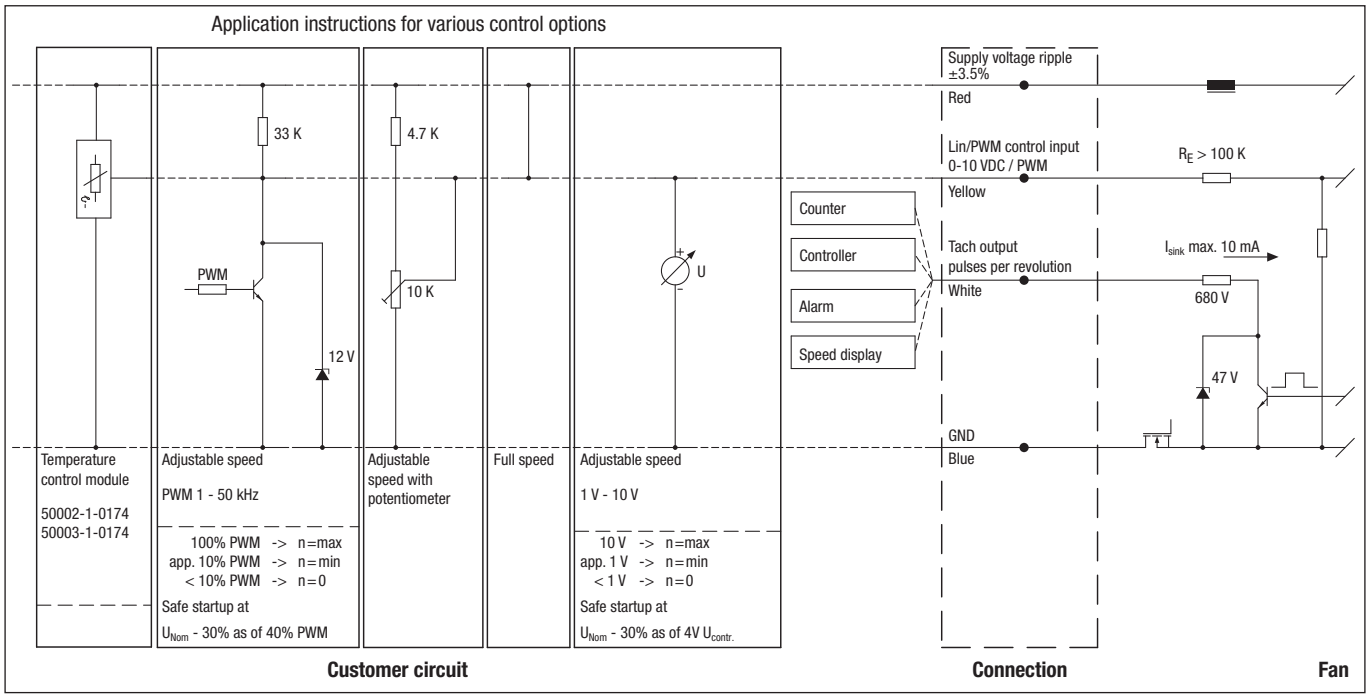

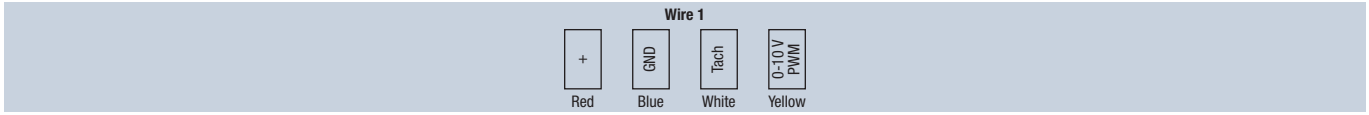

Wire	Connection	Color	Assignment/function
1	+	Red	Supply voltage ripple ±3.5%
	GND	Blue	GND

Wire	Connection	Color	Assignment/function
1	Tach	White	Tach output:
	0-10 V / PWM	Yellow	Control input

ebmpapst

Connection diagrams EC G)

Technical features (nominal voltage 24 / 48 VDC)**:**
- Control input 0-10 VDC / PWM
- Tach output
- Reverse polarity and locked-rotor protection

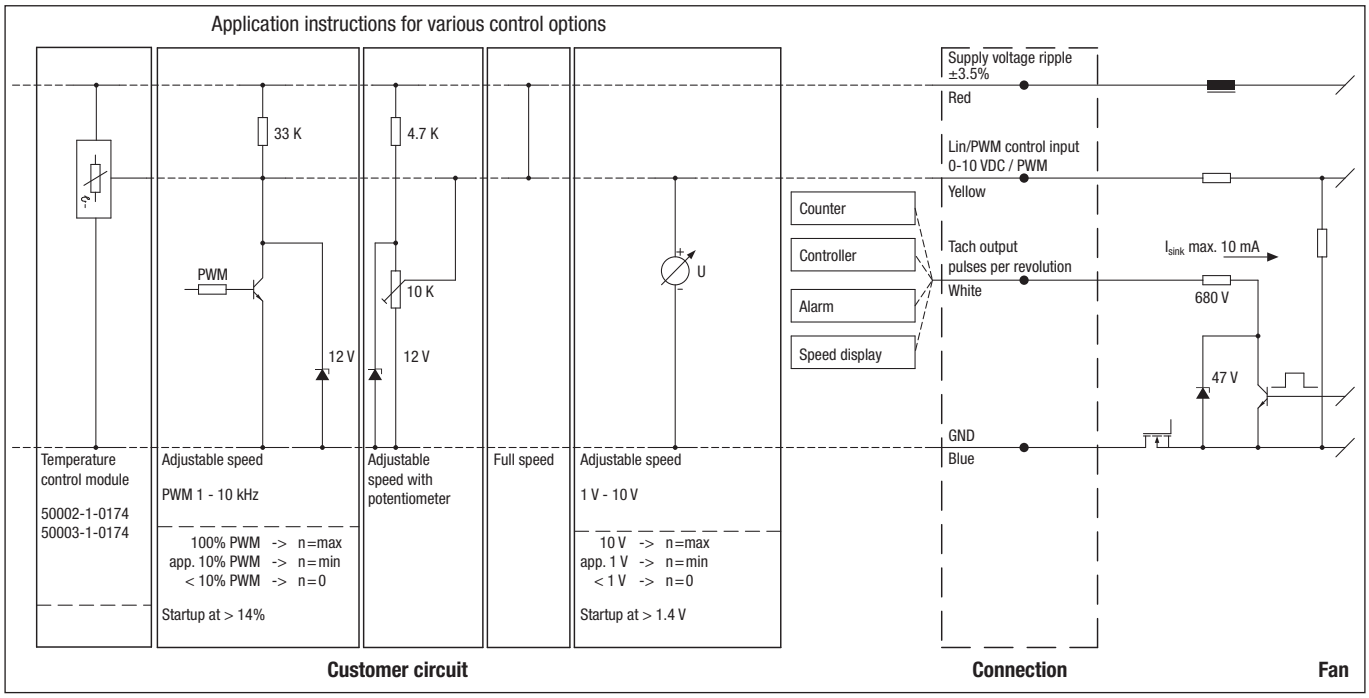

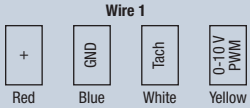

Wire	Connection	Color	Assignment/function
1	+	Red	Supply voltage ripple ±3.5%
	GND	Blue	GND

Wire	Connection	Color	Assignment/function
1	Tach	White	Tach output:
			2 pulses/revolution (M1G045/M1G055)
			3 pulses/revolution (M1G074/M1G084)
	0-10 V / PWM	Yellow	Control input (impedance 100 kV)

Connection diagrams EC H3)

Technical features (M3G 055 with 2 speed stages)**:**

- Speed setting input (230V)
- Thermal overload protection electronics / motor
- Motor current limitation
- Locked-rotor protection
- Soft startup

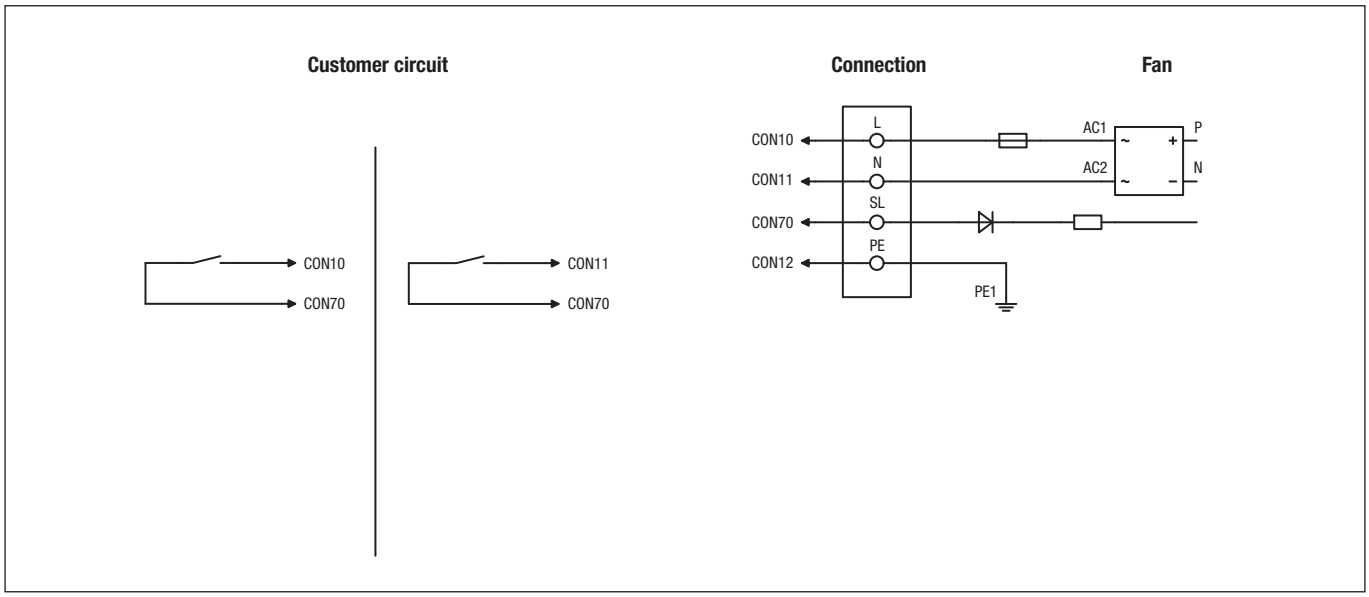

Wire	Connection	Color	Function / assignment
CON10	L	Black	Power supply 230 VAC, 50 - 60 Hz, see type plate for voltage range
CON11	N	Blue	Neutral conductor
CON12	PE	Green/yellow	Ground conductor
CON70	SL	brown	Speed selection: switch open = speed 1; switch closed = speed 2

Connection diagrams EC H4)

Technical features (M3G 055 speed-controlled)**:**

- Output 10 VDC Max. 1.1 mA
- Tach output
- Thermal overload protection electronics / motor
- Motor current limitation
- Soft startup
- Locked-rotor protection
- Control input 0-10 VDC / PWM
- Control interface with SELV potential safely disconnected from the mains

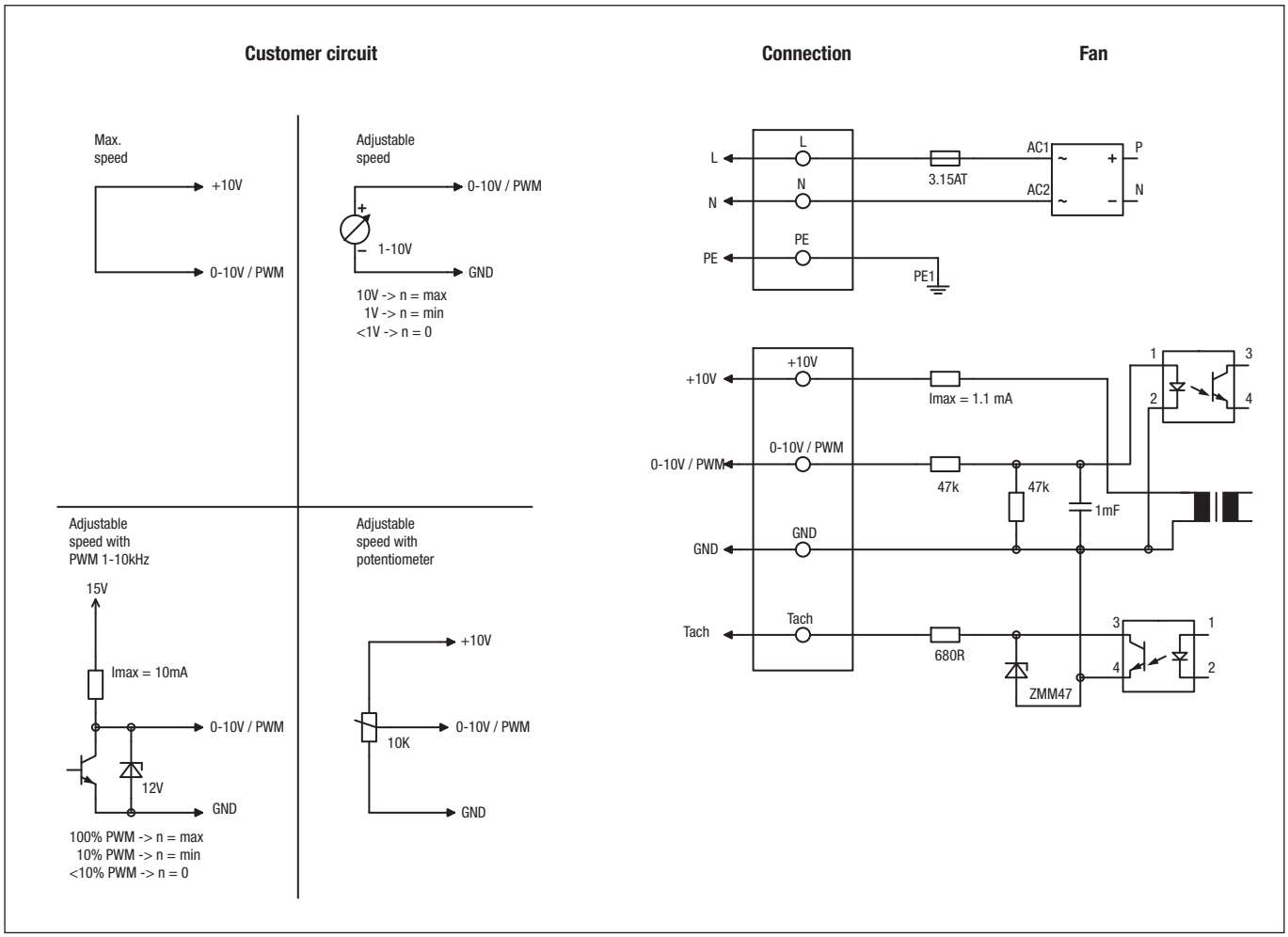

Connection	Color	Function / assignment
L	Black	Power supply 115/230 VAC, 50 - 60 Hz, see type plate for voltage range
N	Blue	Neutral conductor
PE	Green/yellow	Ground conductor
+10V/max.1.1mA	Red	Voltage output +10 V / 1.1 mA, electrically isolated, not short-circuit-proof
Tach	White	Tach output: Open collector, 1 pulse per revolution, electrically isolated
0-10V / PWM	Yellow	Control input 0-10 V or PWM, electrically isolated
GND	Blue	GND - Connection for control interface

Connection diagrams EC J5)

Technical features (nominal voltage 24 / 48 VDC)**:**

- Control input 0-10 VDC / PWM
- Tach output
- Reverse polarity and locked-rotor protection
- Motor current limitation
- Line undervoltage detection
- Soft startup

Application instructions for various control options

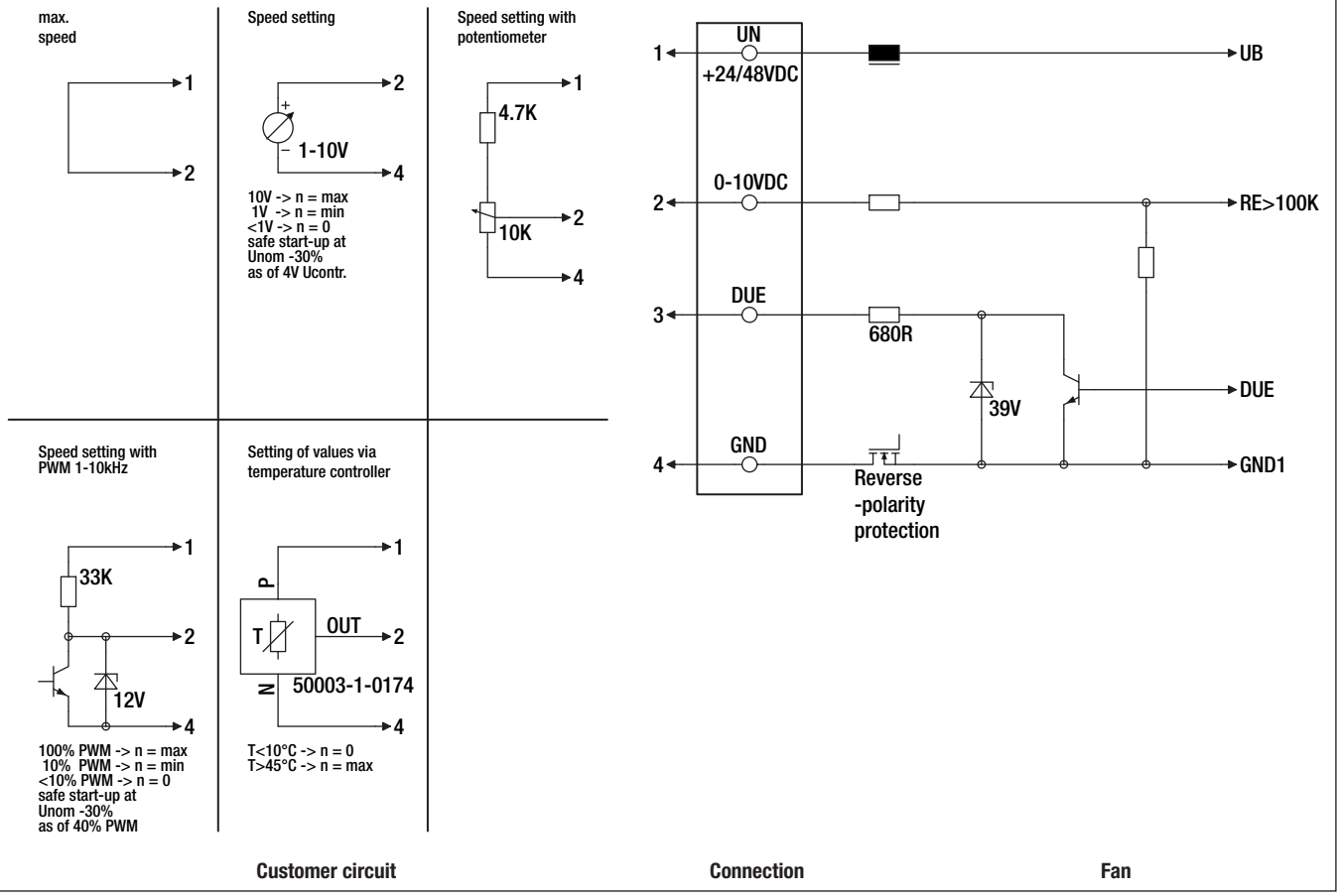

Wire	Connection	Color	Assignment/function
1	UN +24/48 VDC	Red	Power supply 24/48 VDC, supply voltage ripple ± 3.5 %
2	0-10 VDC	Yellow	Control input Re >100 K
3	Tach	White	Tach output, 3 pulses per revolution, Isink max. = 10 mA
4	GND	Blue	Reference ground

Connection diagrams AC A1) / A3) / C2)

A1) Single-phase capacitor motor (1~ 115/230 VAC power line)
with thermal overload protector wired internally

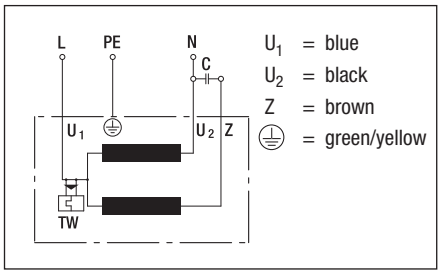

A3) Single-phase capacitor motor (1~ 115/230 VAC power line)
with thermal overload protector wired internally

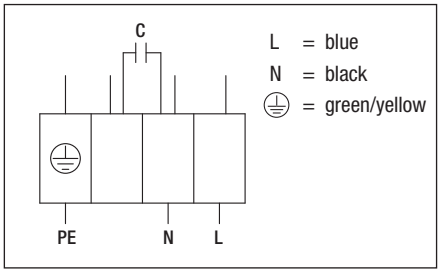

C2) Star connection (3~ 400 VAC power line)
without thermal overload protector

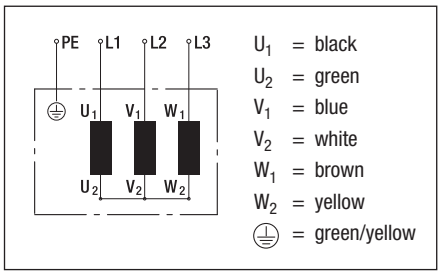

Connection diagrams AC J7)

J7) Energy-saving motor (ESM) (1~ 115/230 VAC power line)

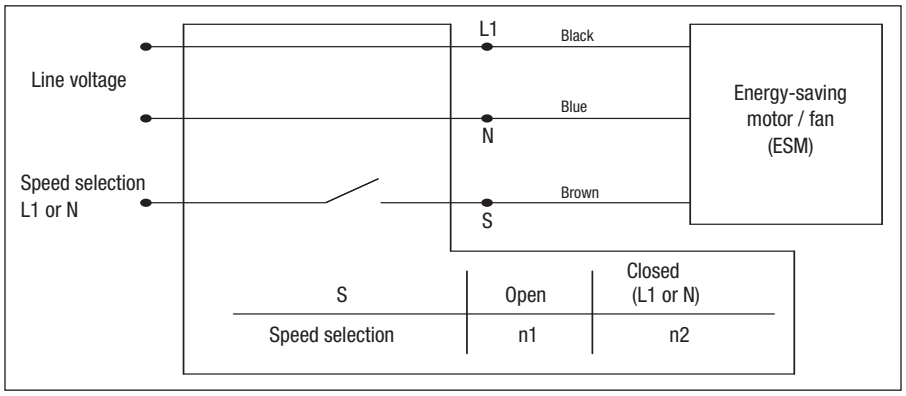

ebmpapst

ebm-papst in Germany

ebm-papst Mulfingen GmbH & Co. KG
Bachmühle 2
74673 Mulfingen
GERMANY
Phone +49 7938 81-0
Fax +49 7938 81-110
info1@de.ebmpapst.com

ebm-papst St. Georgen GmbH & Co. KG
Hermann-Papst-Straße 1
78112 St. Georgen
GERMANY
Phone +49 7724 81-0
Fax +49 7724 81-1309
info2@de.ebmpapst.com

ebm-papst Landshut GmbH
Hofmark-Aich-Straße 25
84030 Landshut
GERMANY
Phone +49 871 707-0
Fax +49 871 707-465
info3@de.ebmpapst.com

Berlin
Dipl.-Ing. (TH) Jens Duchow
Händelstraße 7
16341 Panketal
GERMANY
Phone +49 30 944149-62
Fax +49 30 944149-63
Jens.Duchow@de.ebmpapst.com

Bielefeld
Dipl.-Ing. (FH) Wolf-Jürgen Weber
Niehausweg 13
33739 Bielefeld
GERMANY
Phone +49 5206 91732-31
Fax +49 5206 91732-35
Wolf-Juergen.Weber@de.ebmpapst.com

Dortmund
Dipl.-Ing. (FH) Hans-Joachim Pundt
Auf den Steinern 3
59519 Möhnesee-Völlinghausen
GERMANY
Phone +49 2925 800-407
Fax +49 2925 800-408
Hans-Joachim.Pundt@de.ebmpapst.com

Frankfurt
Dipl.-Ing. Christian Kleffmann
Dr.-Hermann-Krause-Straße 23
63452 Hanau
GERMANY
Phone +49 6181 1898-12
Fax +49 6181 1898-13
Christian.Kleffmann@de.ebmpapst.com

Halle
Dipl.-Ing. (TU) Michael Hanning
Lercheneck 4
06198 Salzatal / OT Lieskau
GERMANY
Phone +49 345 55124-56
Fax +49 345 55124-57
Michael.Hanning@de.ebmpapst.com

Hamburg
Ingenieurbüro Breuell GmbH
Ing. Dirk Kahl
Elektroingenieur
Oststraße 96
22844 Norderstedt
GERMANY
Phone +49 40 538092-19
Fax +49 40 538092-84
Kahl@breuell-hilgenfeldt.de

Heilbronn / Heidelberg
Dipl.-Ing. Mark Gartner
Gehrweg 12
74199 Unterheinriet
GERMANY
Phone +49 7130 404569-1
Fax +49 7130 404569-2
Mark.Gartner@de.ebmpapst.com

Kassel
Dipl.-Ing. (FH) Ralph Brück
Hoherainstraße 3 b
35075 Gladenbach
GERMANY
Phone +49 6462 4071-10
Fax +49 6462 4071-11
Ralph.Brueck@de.ebmpapst.com

Koblenz
Winfried Schaefer
Hinter der Kirch 10
56767 Uersfeld
GERMANY
Phone +49 2657 16-96
Fax +49 2657 16-76
Winfried.Schaefer@de.ebmpapst.com

Munich
Dipl.-Wirt.-Ing. (FH) Jens Peter
Landsbergerstraße 14
86932 Pürgen
GERMANY
Phone +49 8196 99877-54
Fax +49 8196 99877-55
Jens.Peter@de.ebmpapst.com

Nuremberg
Dipl.-Wirt.-Ing. (FH) Axel Resch
Dr.-August-Koch-Str. 1
91639 Wolframs-Eschenbach
GERMANY
Phone +49 9875 9783-170
Fax +49 9875 9783-171
Axel.Resch@de.ebmpapst.com

Offenburg
Dipl.-Ing. (FH) Ralf Braun
Hubeneck 21
77704 Oberkirch
GERMANY
Phone +49 7802 9822-52
Fax +49 7802 9822-53
Ralf.Braun@de.ebmpapst.com

Stuttgart
Dipl.-Ing. (FH) Rudi Weinmann
Hindenburgstraße 100/1
73207 Plochingen
GERMANY
Phone +49 7153 9289-80
Fax +49 7153 9289-81
Rudi.Weinmann@de.ebmpapst.com

Ulm
M.Sc. Reinhard Sommerreißer
Am Germanenring 13
86674 Baar / Schwaben
GERMANY
Phone +49 8276 5899-775
Fax +49 8276 5899-776
Reinhard.Sommerreisser@de.ebmpapst.com

Distributors

Burgdorf
ETB Electronic Team
Beratungs- u. Vertriebs GmbH
Wundramweg 1
31303 Burgdorf
GERMANY
Phone +49 5136 97229-30
Fax +49 5136 97229-39
info@etb-electronic.de
www.etb-electronic.de

Frankfurt
R.E.D. Handelsgesellschaft mbH
Gutenbergstraße 3
63110 Rodgau - Jügesheim
GERMANY
Phone +49 6106 841-0
Fax +49 6106 841-111
info@red-elektromechanik.de
www.red-elektromechanik.de

Frankfurt / Neu-Isenburg
Arrow Central Europe GmbH
Frankfurter Straße 211
63263 Neu-Isenburg
GERMANY
Phone: +49(0)6102/5030-0
Fax: +49(0)6102/5030-8455
E-Mail: info@arrowce.com

Hamburg
Breuell + Hilgenfeldt GmbH
Oststraße 96
22844 Norderstedt
GERMANY
Phone +49 40 538092-20
Fax +49 40 538092-84
info@breuell-hilgenfeldt.de

Walter Kluxen GmbH
Neuer Höltigbaum 6
20097 Hamburg
GERMANY
Phone +49 40 237010
Fax +49 40 23701309

ebm-papst in Europe

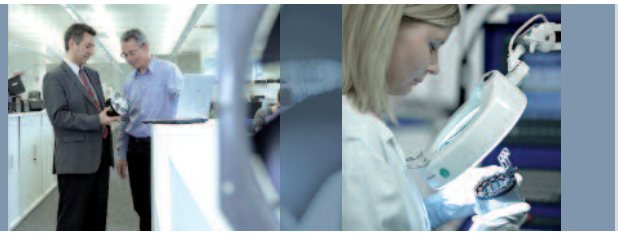

Klausdorf
ETB Electronic Team
Beratungs- u. Vertriebs GmbH
Zossener Straße 27
15838 Klausdorf
GERMANY
Phone +49 33703 69-0
Fax +49 33703 69-149
info@etb-electronic.de
www.etb-electronic.de

Munich
A. Schweiger GmbH
Ohmstraße 1
82054 Sauerlach
GERMANY
Phone +49 8104 897-0
Fax +49 8104 897-90
info@schweiger-gmbh.de
www.schweiger-gmbh.com

Multi-Bauelemente-Service
Vertrieb von elektr. Bauelementen GmbH
Römerstraße 8
85661 Forstinning
GERMANY
Phone +49 8121 2506-0
Fax +49 8121 2506-200
multi.bauelemente@mbs.to

● *Express* **Service-Center** (1 to 5 pieces)

North
Breuell + Hilgenfeldt GmbH
Oststraße 96
22844 Norderstedt
GERMANY
Phone +49 40 538092-20
Fax +49 40 538092-84
info@breuell-hilgenfeldt.de

South
HDS Ventilatoren Vertriebs GmbH
Glaswiesenstraße 1
74677 Dörzbach
GERMANY
Phone +49 7937 80355-0
Fax +49 7937 80355-25
info@hds-gmbh.net
www.hds-gmbh.net

Europe

Belgium
ebm-papst Benelux B.V.
Sales office Belgium-Luxemburg
Romeinsestraat 6/0101
Research Park Haasrode
3001 Heverlee-Leuven
BELGIUM
Phone +32 16 396-200
Fax +32 16 396-220
info@be.ebmpapst.com
www.ebmpapst.be

Avnet Abacus Diegem
Eagle Building
Kouterveldstraat 20
1831 Diegem
BELGIUM
Phone +32 2 7099 167
Fax +32 2 7099 801
diegem@avnet-abacus.eu
www.avnet-abacus.eu

Bulgaria
ebm-papst Romania S.R.L.
Str. Tarnavei No. 20
500327 Brasov
ROMANIA
Phone +40 268 331859
Fax +40 268 312805
dudasludovic@xnet.ro

Compex Ges.m.b.H
Wurlitzergasse 10/3
1160 Wien
AUSTRIA
Phone +43 1 4804223
Fax +43 1 4864230
compex.wien@utanet.at

Denmark
ebm-papst Denmark ApS
Vallensbækvej 21
2605 Brøndby
DENMARK
Phone +45 43 631111
Fax +45 43 630505
mail@dk.ebmpapst.com
www.ebmpapst.dk

Estonia
ebm-papst Oy, Eesti Filiaal
Kesk tee 13
Aaviku küla, Jüri Tehnopark
75301 Rae Vald, Harjumaa
ESTONIA
Phone +372 65569-78
Fax +372 65569-79
www.ebmpapst.ee

Finland
ebm-papst Oy
Puistotie 1
02760 Espoo
FINLAND
Phone +358 9 887022-0
Fax +358 9 887022-13
mailbox@ebmpapst.fi
www.ebmpapst.fi

France
ebm-papst sarl
ZI Nord - rue A. Mohler
BP 62
67212 Obernai Cedex
FRANCE
Phone +33 820 326266
Fax +33 3 88673883
info@ebmpapst.fr
www.ebmpapst.fr

Greece
Helcoma
Th. Rotas & Co OE
Davaki 65
17672 Kallithea-Attiki
GREECE
Phone +30 210 9513-705
Fax +30 210 9513-490
contact@helcoma.gr
www.helcoma.gr

Assimacopoulos S.A.
11, Karitsi Square
10561 Athen
GREECE
Phone +30 10 322 1737
Fax +30 10 322 5708
assimac@interagora.gr
www.assimacopoulos.gr

United Kingdom
ebm-papst UK Ltd.
Chelmsford Business Park
Chelmsford Essex CM2 5EZ
UNITED KINGDOM
Phone +44 1245 468555
Fax +44 1245 466336
sales@uk.ebmpapst.com
www.ebmpapst.co.uk

ebm-papst Automotive & Drives (UK) Ltd.
The Smithy
Fidlers Lane
East Ilsley, Berkshire RG20 7LG
UNITED KINGDOM
Phone +44 1635 2811-11
Fax +44 1635 2811-61
A&Dsales@uk.ebmpapst.com
www.ebmpapst-ad.com

ebm-papst in Europe

Ireland
ebm-papst UK Ltd.
Chelmsford Business Park
Chelmsford Essex CM2 5EZ
UNITED KINGDOM
Phone +44 1245 468555
Fax +44 1245 466336
sales@uk.ebmpapst.com
www.ebmpapst.co.uk

Iceland
RJ Engineers
Stangarhyl 1a
110 Reykjavik
ICELAND
Phone +354 567 8030
Fax +354 567 8015
rj@rj.is
www.rj.is

Italy
ebm-papst Srl
Via Cornaggia 108
22076 Mozzate (Co)
ITALY
Phone +39 0331 836201
Fax +39 0331 821510
info@it.ebmpapst.com
www.ebmpapst.it

Croatia
ebm-papst Industries Kft.
Ezred u. 2.
1044 Budapest
HUNGARY
Phone +36 1 8722-190
Fax +36 1 8722-194
office@hu.ebmpapst.com

Compex Ges.m.b.H
Wurlitzergasse 10/3
1160 Wien
AUSTRIA
Phone +43 1 4804223
Fax +43 1 4864230
compex.wien@utanet.at

Macedonia
ebm-papst Industries Kft.
Ezred u. 2.
1044 Budapest
HUNGARY
Phone +36 1 8722-190
Fax +36 1 8722-194
office@hu.ebmpapst.com

Netherlands
ebm-papst Benelux B.V.
Polbeemd 7 - 5741 TP Beek en Donk
P. O. Box 140 - 5740 AC Beek en Donk
NETHERLANDS
Phone +31 492 502-900
Fax +31 492 502-950
verkoop@nl.ebmpapst.com
www.ebmpapst.nl

Avnet Abacus Netherlands
Takkebijsters 2
4817 BL Breda
NETHERLANDS
Phone +31 765 722 300
Fax +31 765 722 303
breda@avnet-abacus.eu
www.avnet-abacus.eu

Norway
ebm-papst AS
P. B. 173 Holmlia
1251 Oslo
NORWAY
Phone +47 22 763340
Fax +47 22 619173
mailbox@ebmpapst.no
www.ebmpapst.no

Austria
ebm-papst Motoren & Ventilatoren GmbH
Straubingstraße 17
4030 Linz
AUSTRIA
Phone +43 732 321150-0
Fax +43 732 321150-20
info@at.ebmpapst.com
www.ebmpapst.at

Avnet Abacus Vienna
Schönbrunner Str. 297-307
1120 Vienna
AUSTRIA
Phone +43 1 86642-0
Fax +43 1 86642-250
wien@avnet-abacus.eu
www.avnet-abacus.eu

Compex Ges.m.b.H
Wurlitzergasse 10/3
1160 Wien
AUSTRIA
Phone +43 1 4804223
Fax +43 1 4864230
compex.wien@utanet.at

Poland
ebm-papst Polska Sp. z o.o.
ul. Annopol 4A
03236 Warszawa
POLAND
Phone +48 22 6757819
Fax +48 22 6769587
office@ebmpapst.pl
www.ebmpapst.pl

Compex Ges.m.b.H
Wurlitzergasse 10/3
1160 Wien
AUSTRIA
Phone +43 1 4804223
Fax +43 1 4864230
compex.wien@utanet.at

Portugal
ebm-papst (Portugal), Lda.
Centro Empresarial de Alverca
Rua de Adarse, Vale D'Ervas
Corpo D / Fracção 3
2615-178 Alverca do Ribatejo
PORTUGAL
Phone +351 218 394 880
Fax +351 218 394 759
info@pt.ebmpapst.com
www.ebmpapst.pt

Romania
ebm-papst Romania S.R.L.
Str. Tarnavei No. 20
500327 Brasov
ROMANIA
Phone +40 268 331859
Fax +40 268 312805
dudasludovic@xnet.ro

Compex Ges.m.b.H
Wurlitzergasse 10/3
1160 Wien
AUSTRIA
Phone +43 1 4804223
Fax +43 1 4864230
compex.wien@utanet.at

ebm-papst in Europe and the Americas

Russia
ebm-papst Ural GmbH
Posadskaya Street, 23(E), 3
620102 Ekaterinburg
RUSSIA
Phone +7 343 2338000
Fax +7 343 2337788
Konstantin.Molokov@ru.ebmpapst.com
www.ebmpapst.ur.ru

ebm-papst Rus GmbH
proezd 4529, vladenie 5, stroenie 1
141000 Mytistschi, Oblast Moscow
RUSSIA
Phone +7 495 9807524
Fax +7 495 5140924
info@ebmpapst.ru
www.ebmpapst.ru

Sweden
ebm-papst AB
Äggelundavägen 2
17562 Järfälla
SWEDEN
Phone +46 10 4544400
Fax +46 8 362306
info@ebmpapst.se
www.ebmpapst.se

Switzerland
ebm-papst AG
Rütisbergstrasse 1
8156 Oberhasli
SWITZERLAND
Phone +41 44 73220-70
Fax +41 44 73220-77
verkauf@ebmpapst.ch
www.ebmpapst.ch

Omni Ray AG
Im Schörli 5
8600 Dübendorf
SWITZERLAND
Phone +41 44 802 2880
Fax +41 44 802 2828
r.borner@omniray.ch
www.omniray.ch

Serbia & Montenegro
ebm-papst Industries Kft.
Ezred u. 2.
1044 Budapest
HUNGARY
Phone +36 1 8722-190
Fax +36 1 8722-194
office@hu.ebmpapst.com

Spain
ebm-papst Ibérica S.L.
Avda. del Sistema Solar, 29
28830 San Fernando de Henares (Madrid)
SPAIN
Phone +34 91 6780894
Fax +34 91 6781530
ventas@ebmpapst.es
www.ebmpapst.es

Czech Republic / Slovakia
ebm-papst CZ s.r.o.
Kaštanová 34a
620 00 Brno
CZECH REPUBLIC
Phone +420 544 502-411
Fax +420 547 232-622
info@ebmpapst.cz
www.ebmpapst.cz

Turkey
Akantel Elektronik San. Tic. LTD. Sti.
Atatürk Organize Sanayi
Bölgesi 10007 SK. No.:6
35620 Cigli-Izmir
TURKEY
Phone +90 232 3282090
Fax +90 232 3280270
akantel@akantel.com.tr
www.ebmpapst.com.tr

Ukraine
ebm-papst Ukraine LLC
Lepse Boulevard, 4, Building 21
03067 Kiev
UKRAINE
Phone +38 044 2063091
Fax +38 044 2063091
mail@ebmpapst.ua
www.ebmpapst.ua

Hungary
ebm-papst Industries Kft.
Ezred u. 2.
1044 Budapest
HUNGARY
Phone +36 1 8722-190
Fax +36 1 8722-194
office@hu.ebmpapst.com

Belarus
ebm-papst Bel AgmbH
Lipkovskaya Gasse 34
Office No. 6, Room 106, 107
223010 Minsk
BELARUS
Phone +375 17 3851556
Fax +375 17 3851556
info@by.ebmpapst.com
www.ebmpapst.by

The Americas

Argentina
ebm-papst de Argentina S.A.
Hernandarias 148 Lomas del Mirador
Pcia. de Buenos Aires (1752)
ARGENTINA
Phone +54 11 46576135
Fax +54 11 46572092
ventas@ar.ebmpapst.com
www.ebmpapst.com.ar

Brazil
ebm-papst Motores Ventiladores Ltda.
Av. José Giorgi, 301 Galpões B6+B7
Condominio Logical Center
06707-100 Cotia - São Paulo
BRAZIL
Phone +55 11 4613-8700
Fax +55 11 4777-1456
vendas@br.ebmpapst.com
www.ebmpapst.com.br

Canada
ebm-papst Canada Inc.
1800 Ironstone Manor, Unit 2
Pickering, Ontario, L1W3J9
CANADA
Phone +1 905 420-3533
Fax +1 905 420-3772
sales@ca.ebmpapst.com
www.ebmpapst.ca

Mexico
ebm Industrial S. de R.L. de C.V.
Paseo de Tamarindos 400-A-5to Piso
Col. Bosques de las Lomas
Mexico 05120, D.F.
MEXICO
Phone +52 55 3300-5144
Fax +52 55 3300-5243
sales@mx.ebmpapst.com
www.ebmpapst.com.mx

USA
ebm-papst Inc.
P.O. Box 4009
100 Hyde Road
Farmington, CT 06034
UNITED STATES
Phone +1 860 674-1515
Fax +1 860 674-8536
sales@us.ebmpapst.com
www.ebmpapst.us

ebm-papst Automotive & Drives, Inc.
3200 Greenfield, Suite 255
Dearborn, MI 48120
UNITED STATES
Phone +1 313 406-8080
Fax +1 313 406-8081
automotive@us.ebmpapst.com
www.ebmpapst-automotive.us

ebm-papst in Africa, Asia, and Australia

Africa

South Africa
ebm-papst South Africa (Pty) Ltd.
P.O. Box 3124
1119 Yacht Avenue
2040 Honeydew
SOUTH AFRICA
Phone +27 11 794-3434
Fax +27 11 794-5020
info@za.ebmpapst.com
www.ebmpapst.co.za

Asia

China
ebm-papst Ventilator (Shanghai) Co., Ltd.
No. 418, Hua Jing Road
Wai Gao Qiao Free Trade Zone
No. 2001, Yang Gao (N) Road
200131 Shanghai
P.R. of CHINA
Phone +86 21 5046-0183
Fax +86 21 5046-1119
sales@cn.ebmpapst.com
www.ebmpapst.com.cn

Hong Kong
ebm-papst Hong Kong Ltd.
Room 17E, MG Tower
133 Hoi Bun Road, Kwun Tong
Hong Kong
P.R. of CHINA
Phone +852 2145-8678
Fax +852 2145-7678
info@hk.ebmpapst.com

India
ebm-papst India Pvt. Ltd.
26/3, G.N.T. Road, Erukkencherry
Chennai-600118
INDIA
Phone +91 44 25372556
Fax +91 44 25371149
sales@in.ebmpapst.com
www.ebmpapst.in

Indonesia
ebm-papst Indonesia
Representative Office
German Centre, 4th Floor, Suite 4470
Jl. Kapt. Subijono Dj. Bumi Serpong Damai
15321 Tangerang
INDONESIA
Phone +62 21 5376250
Fax +62 21 5388305
salesdept@id.ebmpapst.com

Israel
Polak Bros. Import Agencies Ltd.
9 Hamefalsim Street
Kiryat Arie, Petach-Tikva 49514
ISRAEL
Phone +972 3 9100300
Fax +972 3 5796679
polak@polak.co.il
www.polak.co.il

AVNET Components Israel LTD
P.O.Box 48 Tel-Mond 4065001
ISRAEL
Phone +972 9 7780280
Fax +972 3 760 1115
Avnet.Israel@avnet.com

Japan
ebm-papst Japan K.K.
Attend on Tower 13F
Shinyokohama 2-8-12, Kohoku-ku
222-0033 Yokohama-City, Kanagawa
JAPAN
Phone +81 45 47057-51
Fax +81 45 47057-52
info@jp.ebmpapst.com
www.ebmpapst.jp

Korea
ebm-papst Korea Co. Ltd.
6F, Trutec Bldg.
12, WorldCupbuk-ro 56-gil
Mapo-Gu
Seoul 121-835
KOREA
Phone +82 2 366213-24
Fax +82 2 366213-26
info@kr.ebmpapst.com
www.ebmpapst.co.kr

Malaysia
ebm-papst Malaysia
Representative Office
Unit 12-2, Jalan USJ Sentral 3
Persiaran Subang, Selangor Darul Ehsan
47600 Subang Jaya
MALAYSIA
Phone +60 3 8024-1680
Fax +60 3 8024-8718
salesdept@my.ebmpapst.com

Singapore
ebm-papst SEA Pte. Ltd.
23 Ubi Road 4 #06-00
Olympia Industrial Building
Singapore 408620
SINGAPORE
Phone +65 65513789
Fax +65 68428439
salesdept@sg.ebmpapst.com

Taiwan
ETECO Engineering & Trading Corp.
10F-I, No. 92, Teh-Wei St.
Tsow-Inn District, Kaohsiung
TAIWAN
Phone +886 7 557-4268
Fax +886 7 557-2788
eteco@ms22.hinet.netwww.ebmpapst.com.tw

Thailand
ebm-papst Thailand Co., Ltd.
99/9 Moo 2, Central Chaengwattana Tower
14th Floor, Room 1402
Chaengwattana Road Bangtarad, Pakkret
11120 Nonthaburi
THAILAND
Phone +66 2 8353785-7
Fax +66 2 8353788
salesdept@th.ebmpapst.com

United Arab Emirates
ebm-papst Middle East FZE
PO Box 17755
Jebel Ali Free Zone / FZS1 / AP05
Dubai
UNITED ARAB EMIRATES
Phone +971 4 88608-26
Fax +971 4 88608-27
info@ae.ebmpapst.com
www.ebmpapst.ae

Vietnam
ebm-papst SEA Pte. Ltd.
Representative Office
Room 402, 4th Floor, Sai Gon 3 Building
140 Nguyen Van Thu, District 1
Ho Chi Minh City
VIETNAM
Phone +84 8 39104099 / 39103969
Fax +84 8 39103970

Oceania

Australia
ebm-papst A&NZ Pty Ltd.
10 Oxford Road
Laverton North, Victoria, 3026
AUSTRALIA
Phone +61 3 9360-6400
Fax +61 3 9360-6464
sales@ebmpapst.com.au
www.ebmpapst.com.au

New Zealand
ebm-papst A&NZ Pty Ltd.
61 Hugo Johnston Drive, Unit H
Penrose 1061, Auckland
NEW ZEALAND
PO Box 112278,
Penrose 1642, Auckland
Phone +64 9 525-0245
Fax +64 9 525-0246
sales@ebmpapst.com.au
www.ebmpapst.com.au

ebmpapst

Notes

www.ebmpapst.com

37634-7-8811 · 2016-01 · mc-6'
Printed in Germany

ebm-papst
St. Georgen GmbH & Co. KG

Hermann-Papst-Straße 1
D-78112 St. Georgen
Germany
Phone +49 7724 81-0
Fax +49 7724 81-1309
info2@de.ebmpapst.com

ebm-papst
Mulfingen GmbH & Co. KG

Bachmühle 2
D-74673 Mulfingen
Germany
Phone +49 7938 81-0
Fax +49 7938 81-110
info1@de.ebmpapst.com

ebm-papst
Landshut GmbH

Hofmark-Aich-Straße 25
D-84030 Landshut
Germany
Phone +49 871 707-0
Fax +49 871 707-465
info3@de.ebmpapst.com

ebmpapst

The engineer's choice