PART NUMBER CODING
SWR25A-NREC-S_ _-R_-BR

TERMINATION TYPE

A= RIGHT ANGLE BENT, TYPE 2

B= RIGHT ANGLE BENT, TYPE 1

NUMBER OF POSITIONS

(CONTACTS PER ROW)

REVISIONS				
REV.	ECO. NO	DESCRIPTION	DATE	BY
A	2006	INITIAL RELEASE	9/17/09	JH

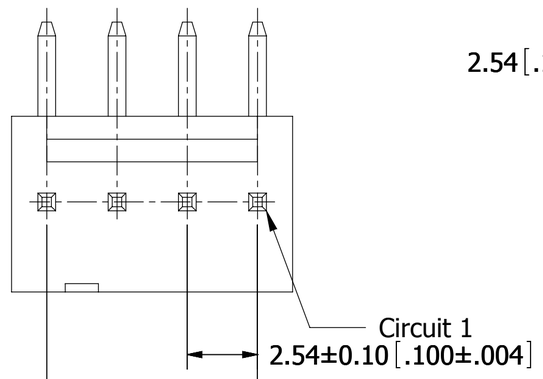

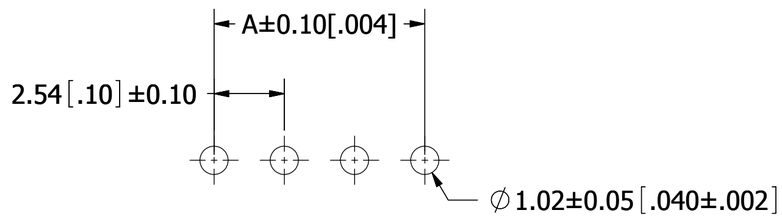

P.C.B LAYOUT

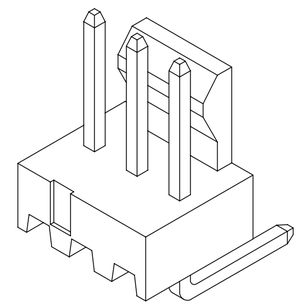

P/N: SWR25A-NREC-S_ _-RB-BR
(TYPE 1)- AS SHOWN

P/N: SWR25A-NREC-S_ _-RA-BR
(TYPE 2)- PIN TAIL BENT OPPOSITE

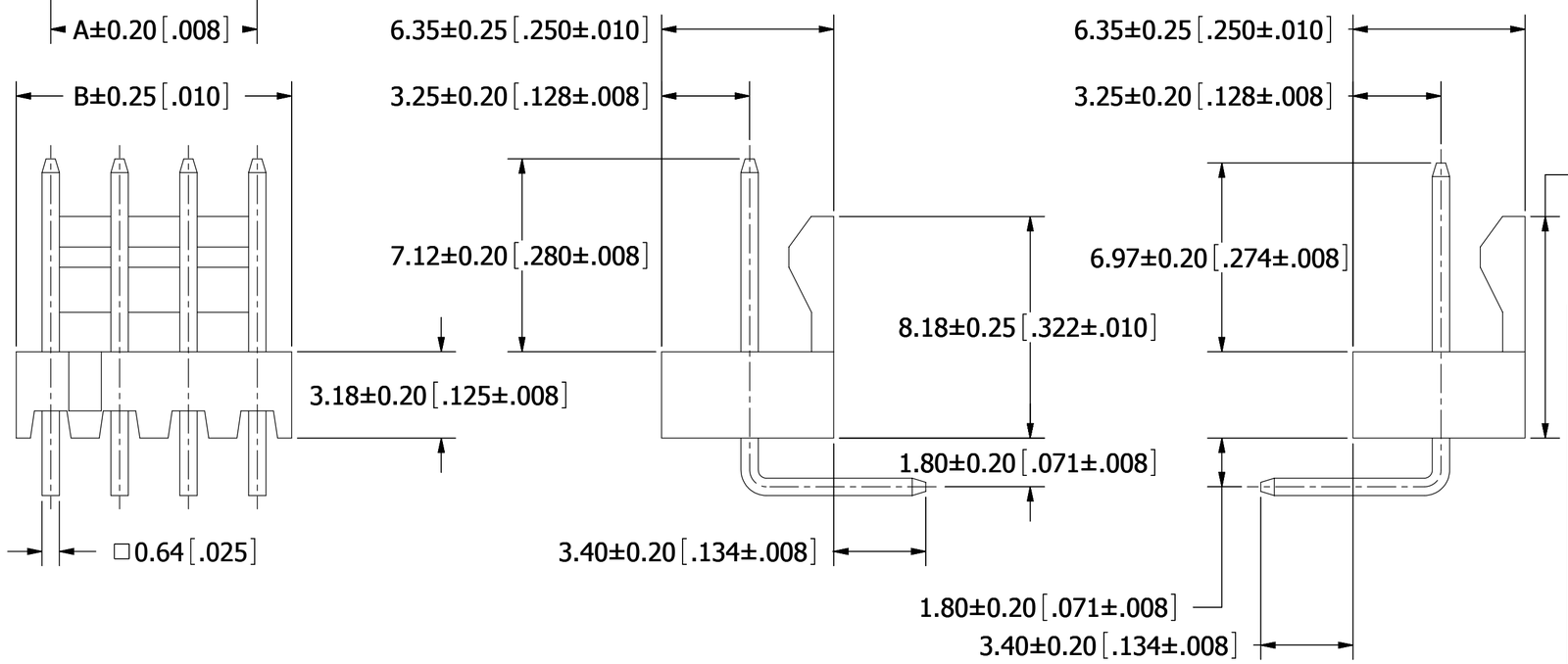

P/N: SWR25A-NREC-S_ _-RB-BR (TYPE 1)

P/N: SWR25A-NREC-S_ _-RA-BR (TYPE 2)

Part Number	Positions/ Contacts	A		B	
		MM	INCH	MM	INCH
SWR25A-NREC-S02-R_-BR	02/02	2.54	0.100	5.08	0.200
SWR25A-NREC-S03-R_-BR	03/03	5.08	0.200	7.62	0.300
SWR25A-NREC-S04-R_-BR	04/04	7.62	0.300	10.16	0.400
SWR25A-NREC-S05-R_-BR	05/05	10.16	0.400	12.70	0.500
SWR25A-NREC-S06-R_-BR	06/06	12.70	0.500	15.24	0.600
SWR25A-NREC-S07-R_-BR	07/07	15.24	0.600	17.78	0.700
SWR25A-NREC-S08-R_-BR	08/08	17.78	0.700	20.32	0.800
SWR25A-NREC-S09-R_-BR	09/09	20.32	0.800	22.86	0.900
SWR25A-NREC-S10-R_-BR	10/10	22.86	0.900	25.40	1.000
SWR25A-NREC-S11-R_-BR	11/11	25.40	1.000	27.94	1.100
SWR25A-NREC-S12-R_-BR	12/12	27.94	1.100	30.48	1.200
SWR25A-NREC-S13-R_-BR	13/13	30.48	1.200	33.02	1.300
SWR25A-NREC-S14-R_-BR	14/14	33.02	1.300	35.56	1.400
SWR25A-NREC-S15-R_-BR	15/15	35.56	1.400	38.10	1.500
SWR25A-NREC-S16-R_-BR	16/16	38.10	1.500	40.64	1.600
SWR25A-NREC-S17-R_-BR	17/17	40.64	1.600	43.18	1.700
SWR25A-NREC-S18-R_-BR	18/18	43.18	1.700	45.72	1.800
SWR25A-NREC-S19-R_-BR	19/19	45.72	1.800	48.26	1.900
SWR25A-NREC-S20-R_-BR	20/20	48.26	1.900	50.80	2.000

NOTES:
1. INSULATOR MATERIAL: NYLON66, UL94V-2, COLOR:DARK RED (PANTONE 1685C).
2. CONTACT MATERIAL: BRASS.
3. CONTACT PLATING: TIN OVERALL.
4. CURRENT RATING: 4 AMPS.
5. VOLTAGE RATING: 250V AC/DC.
6. INSULATOR RESISTANCE: 1000 MEGOHMS MIN.
7. CONTACT RESISTANCE: 10 MILLIOHMS MAX.
8. DIELECTRIC WITHSTANDING VOLTAGE: 1000V AC.
9. OPERATING TEMPERATURE: -25° C TO +85° C.
10. MATES WITH SWH25A SERIES SINGLE ROW HOUSING.

RoHS COMPLIANT

UNLESS OTHERWISE SPECIFIED:
DIMENSIONS ARE IN MM[INCHES]
TOLERANCES:
ANGULAR: ± 5°
.X=± .3 [.01]
.XX=± .15 [.006]
.XXX=± .050 [.0020]
SURFACE FINISH: 63 Ra
REMOVE ALL BURRS AND SHARP EDGES .010 MAX

INTERPRET DIMENSIONS AND GEOMETRIC TOLERANCING
PER: ANSI Y14.5M-1994

	DATE	NAME
DRAWN	9/17/09	JH

THE INFORMATION HEREIN CONTAINS PROPIETARY INFORMATION OF SULLINS ELECTRONICS AND IS NOT TO BE REPRODUCED, USED OR DISCLOSED TO OTHERS FOR ANY PURPOSE EXCEPT AS SPECIFICALLY AUTHORIZED IN WRITING BY AN OFFICER OF SULLINS ELECTRONICS.

SULLINS CONNECTOR SOLUTIONS

DESCRIPTION: WAFER 2.54mm CC, 1 ROW, RA/RB

PART NUMBER: SWR25A-NREC-S_ _-R_-BR

SIZE: C | DWG. NO. 11317 | REV A

SCALE: 6:1 | SHEET 1 OF 1